JSC–1117

Space Shuttle Systems Handbook

Volume I – Sections 1 through 9

Mission Operations Directorate
Systems Division

Revision E, DCN–6
August 14, 1996

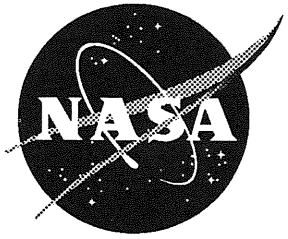

National Aeronautics and
Space Administration

Lyndon B. Johnson Space Center
Houston, Texas

SPACE SHUTTLE SYSTEMS HANDBOOK

REVISION E, DCN–6

PREFACE

This three–volume book contains systems level operational schematics for all of the space shuttle systems. These drawings were prepared by shuttle flight controllers in the Mission Operations Directorate, Systems Division, National Aeronautics and Space Administration, Lyndon B. Johnson Space Center, with the technical support of Integrated Documentation Services, Hernandez Engineering.

This document is intended to provide flight controllers and flight crews with reference material on shuttle systems operations during shuttle flight and simulation operations. It is also intended to be used as a training aid for shuttle hardware, software, and avionics systems operations. Caution should be exercised when using these systems drawings for other purposes. For detailed systems component and logic information, refer to the vendor drawing reference tables at the end of each handbook section.

The symbols and drawing layout standards used in this document are defined in the Mission Operations Directorate Drafting Standards, JSC–10506, Revision C, PCN–2, March 1991. The asterisks (*) that appear after some of the drawing numbers in the table of contents indicate that these schematics are carried onboard in the Systems Data Book during flight operations. Additionally, drawing numbers with letter designators should be used for specific vehicle references only as follows: B = 102, C = 103, D = 104, E = 105.

Comments regarding the contents of this document should be made to the book manager, DF52/Alan Simon, (713) 483–0158. Changes to the permanent distribution list may be made, and/or additional copies may be ordered by completing and returning the form on the following page.

Prepared by

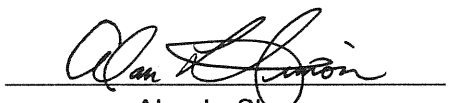

Alan L. Simon
Book Manager, Systems Division

Approved



Jack Knight
Chief, Systems Division

ORDER/DISTRIBUTION CHANGE FORM

_____ Send all three baseline volumes of the SSSH, Revision E, dated December 21, 1990, to the individual/organizational title indicated below. (Note: DCN's are not included in the baseline volumes.)

_____ Send the indicated updates to the SSSH, Revision E, to the individual/ organizational title indicated below.

- _____ DCN–1, dated December 1, 1991
- _____ DCN–2, dated February 19, 1993
- _____ DCN–3, dated October 15, 1993
- _____ DCN–4, dated October 28, 1994
- _____ DCN–5, dated April 14, 1995
- _____ DCN–6, dated August 14, 1996

_____ Add the individual/organizational title indicated below to the distribution list. (This change will be effective with the next update of SSSH.)

_____ Change the number of copies sent to the individual/organizational title indicated below. (This change will be effective with the next update of SSSH.)

NASA Center or company name	Mail code	Title of individual or organizational title	Number of copies

Branch Chief's signature: _____

Branch Chief's name (print): _____

Branch Chief's phone number: _____

Branch Chief's mail code: _____

SPACE SHUTTLE SYSTEMS HANDBOOK

REV E–6

AUGUST 14, 1996

TABLE OF CONTENTS

Item	Title	Rev/DCN	Signoff date
Volume I – Sections 1 through 9			
Section 1 Bus Nomenclature			
Section 1 is reserved.			
Section 2 Electrical Power Distribution			
DWG 2.1* (Sheet 1 of 1)	EPS OVERVIEW	REV E–6	7/17/96
DWG 2.2 (Sheet 1 of 3)	MAIN BUS DC DISTRIBUTION	REV E–5	2/1/95
DWG 2.2 (Sheet 2 of 3)	MAIN BUS DC DISTRIBUTION	REV E–1	10/29/91
DWG 2.2 (Sheet 3 of 3)	AC/DC UTILITY OUTLETS	REV E–2	12/17/92
DWG 2.3 (Sheet 1 of 1)	AC GENERATION AND DISTRIBUTION	REV E–1	10/29/91
DWG 2.4 (Sheet 1 of 3)	MCA DISTRIBUTION	REV E	9/20/90
DWG 2.4 (Sheet 2 of 3)	MCA DISTRIBUTION	REV E–6	2/16/96
DWG 2.4 (Sheet 3 of 3)	MCA DISTRIBUTION	REV E–6	2/16/96
DWG 2.5* (Sheet 1 of 1)	EDO PALLET EPDC/HEATERS	REV E–1	11/8/91
DWG 2.6* (Sheet 1 of 1)	ORBITER DOCKING SYSTEM/POWER	REV E–4	9/21/94
DWG 2.7 (Sheet 1 of 1)	ASSEMBLY POWER CONVERTER UNIT (APCU)	REV E–6	8/13/96
TBL 2–I	VENDOR DRAWING REFERENCES	REV E–5	4/7/95

*Flown in Systems Data Book.

Item	Title	Rev/DCN	Signoff date
	Section 3 Electrical Power Generation		
DWG 3.1* (Sheet 1 of 2)	FUEL CELL/REACTANT STORAGE OVERVIEW	REV E	10/05/90
DWG 3.1* (Shet 2 of 2)	PALLET REACTANT STORAGE OVERVIEW	REV E–6	7/15/96
DWG 3.2* (Sheet 1 of 7)	O2 REACTANT STORAGE TANKS 1 & 2	REV E–1	11/13/91
DWG 3.2* (Shet 2 of 7)	O2 REACTANT STORAGE 4 TANK CONFIG	REV E–1	11/13/91
DWG 3.2* (Sheet 3 of 7)	O2 REACTANT STORAGE 3 TANK CONFIG	REV E–1	11/5/91
DWG 3.2* (Sheet 4 of 7)	O2 REACTANT STORAGE 5 TANK CONFIGURATION OV–102	REV E–1	11/5/91
DWG 3.2* (Sheet 5 of 7)	O2 REACTANT STORAGE 5 TANK CONFIGURATION OV–105	REV E	10/17/90
DWG 3.2* (Sheet 6 of 7)	PALLET O2 REACTANT TANKS 6 & 7	REV E–1	11/8/91
DWG 3.2* (Sheet 7 of 7)	PALLET O2 REACTANT TANKS 8 & 9	REV E–1	11/8/91
DWG 3.3* (Sheet 1 of 7)	H2 REACTANT STORAGE TANKS 1 & 2	REV E–1	11/5/91
DWG 3.3* (Sheet 2 of 7)	H2 REACTANT STORAGE 4 TANK CONFIG	REV E–1	11/15/91
DWG 3.3* (Sheet 3 of 7)	H2 REACTANT STORAGE 3 TANK CONFIGURATION	REV E–1	11/15/91
DWG 3.3* (Sheet 4 of 7)	H2 REACTANT STORAGE 5 TANK CONFIG OV–102 ONLY	REV E–1	11/5/91
DWG 3.3* (Sheet 5 of 7)	H2 REACTANT STORAGE 5 TANK CONFIGURATION OV–105	REV E	10/16/90
DWG 3.3* (Sheet 6 of 7)	PALLET H2 REACTANT TANKS 6 & 7	REV E–1	11/8/91
DWG 3.3* (Sheet 7 of 7)	PALLET H2 REACTANT TANKS 8 & 9	REV E–1	11/8/91
DWG 3.4* (Sheet 1 of 2)	FUEL CELL	REV E–6	5/13/96
DWG 3.4 (Sheet 2 of 2)	FUEL CELL AUTO PURGE AND CELL PERFORMANCE MONITOR	REV E	11/7/91
DWG 3.5* (Sheet 1 of 1)	EDO PALLET	REV E	10/17/90

*Flown in Systems Data Book.

Item	Title	Rev/DCN	Signoff date
	Section 3 Electrical Power Generation (concluded)		
DWG 3.6B (Sheet 1 of 1)	EDO CRYO PALLET PLUMBING	REV E–2	2/6/93
TBL 3–I	VENDOR DRAWING REFERENCES	REV E–2	2/19/93
	Section 4 Lighting		
DWG 4.1 (Sheet 1 of 1)	INTERIOR FLOOD LIGHTING	REV E	10/29/90
DWG 4.2 (Sheet 1 of 2)	INSTRUMENT/NUMERIC/EDGE PANEL LIGHTING	REV E	8/10/87
DWG 4.2 (Sheet 2 of 2)	INSTRUMENT/NUMERIC/EDGE PANEL LIGHTING	REV E–4	9/19/94
DWG 4.3 (Sheet 1 of 1)	ANNUNCIATOR LIGHTING	REV E	9/25/90
DWG 4.4 (Sheet 1 of 1)	EXTERIOR LIGHTING	REV E–6	3/4/96
DWG 4.5 (Sheet 1 of 1)	ORBITER DOCKING SYSTEM/AIRLOCK LIGHTS	REV E–4	8/5/94
TBL 4–I	ANNUNCIATOR CONTROL ASSEMBLY CHANNEL ASSIGNMENTS	REV E	10/18/90
TBL 4–II	VENDOR DRAWING REFERENCES	REV E–4	9/22/94
	Section 5 Sequential/C&W		
DWG 5.1 (Sheet 1 of 1)	SMOKE DETECTION AND FIRE SUPPRESSION	REV E	10/24/90
DWG 5.2 (Sheet 1 of 2)	CAUTION/WARNING OVERVIEW	REV E–3	9/10/93
DWG 5.2 (Sheet 2 of 2)	CAUTION/WARNING	REV E–1	10/21/91
DWG 5.3	(RESERVED)		
DWG 5.4 (Sheet 1 of 1)	SOLID ROCKET BOOSTER RECOVERY	REV E	11/7/90
DWG 5.5 (Sheet 1 of 2)	SRB/ET RANGE SAFETY SYSTEM	REV E	10/15/90
DWG 5.5 (Sheet 2 of 2)	SRB/ET RANGE SAFETY SYSTEM	REV E	10/11/90
TBL 5–I	PRIMARY C/W PARAMETER PROM LIMITS	REV E–3	9/7/93
TBL 5–II	SCHEDULED PRIMARY C/W PARAMETER INHIBIT AND LIMIT CHANGES	REV E–3	9/7/93
TBL 5–III	VENDOR DRAWING REFERENCES	REV E	10/29/90

Item	Title	Rev/DCN	Signoff date
	Section 6 Life Support System		
DWG 6.1* (Sheet 1 of 2)	PRESSURE CONTROL SYSTEM	REV E–1	11/19/91
DWG 6.1* (Sheet 2 of 2)	PRESSURE CONTROL SYSTEM	REV E–1	11/19/91
DWG 6.2* (Sheet 1 of 1)	ATMOSPHERE CIRCULATION	REV E	10/16/90
DWG 6.3 (Sheet 1 of 2)	AIRLOCK/ECLSS INTERFACES	REV E–3	10/6/93
DWG 6.3 (Sheet 2 of 2)	AIRLOCK/ECLSS INTERFACES	REV E–4	6/2/94
DWG 6.4* (Sheet 1 of 1)	SUPPLY WATER STORAGE	REV E–4	8/4/94
DWG 6.5* (Sheet 1 of 1)	WASTE MANAGEMENT SYSTEM	REV E–3	9/10/93
DWG 6.6 (Sheet 1 of 1)	REPACKAGED GALLEY	REV E–4	7/20/94
DWG 6.7	(RESERVED)		
DWG 6.8 (Sheet 1 of 1)	ECLSS INSTRUMENTATION	REV E	8/30/90
DWG 6.9* (Sheet 1 of 1)	EMU INTEGRATED SYSTEM SCHEMATIC	REV E–6	6/18/96
DWG 6.10 (Sheet 1 of 1)	EMU ELECTRICAL SCHEMATIC	REV E–2	12/30/92
DWG 6.11 (Sheet 1 of 1)	MMU & FSS PROPULSION SCHEMATIC	REV E	9/27/90
DWG 6.12* (Sheet 1 of 2)	EDO – CO2 REMOVAL SYSTEM	REV E–6	3/5/96
DWG 6.12* (Sheet 2 of 2)	RCRS MECHANICAL/FAULT LOGIC	REV E–1	11/15/91
DWG. 6.13* (Sheet 1 of 3)	EDO WASTE MANAGEMENT	REV E–3	9/7/93
DWG 6.13* (Sheet 2 of 3)	EDO WASTE MANAGEMENT	REV E–3	10/5/93
DWG 6.13* (Sheet 3 of 3)	EDO WASTE MANAGEMENT	REV E–3	10/6/93
DWG. 6.14* (Sheet 1 of 1)	EXTERNAL AIRLOCK ECLSS	REV E–6	5/29/96
TBL 6–I	VENDOR DRAWING REFERENCES	REV E–4	9/26/94

*Flown in Systems Data Book.

Item	Title	Rev/DCN	Signoff date
	Section 7 Thermal		
DWG 7.1* (Sheet 1 of 2)	ACTIVE THERMAL CONTROL SYSTEM – FREON COOLANT LOOP 1, 2	REV E–1	10/7/91
DWG 7.1* (Sheet 2 of 2)	ACTIVE THERMAL CONTROL SYSTEM – FREON COOLANT LOOP 1, 2 (PLUMBING LENGTHS)	REV E–1	10/7/91
DWG 7.2* (Sheet 1 of 1)	AMMONIA BOILER SYSTEM	REV E–1	10/7/91
DWG 7.3* (Sheet 1 of 2)	FLASH EVAPORATOR SUBSYSTEM	REV E–2	10/29/91
DWG 7.3* (Sheet 2 of 2)	FLASH EVAPORATOR SUBSYSTEM	REV E–2	1/4/93
DWG 7.4* (Sheet 1 of 1)	ARS H_2O COOLANT LOOPS	REV E–2	7/15/92
DWG 7.5 (Sheet 1 of 1)	THERMAL AFT FUSELAGE	REV E	8/21/90
DWG 7.6 (Sheet 1 of 1)	TCS – INSTRUMENTATION MID FUSELAGE	REV E	8/27/90
DWG 7.7 (Sheet 1 of 1)	TPS/STRUCTURE INSTRUMENTATION	REV E–5	1/17/95
DWG 7.8* (Sheet 1 of 4)	EXTERNAL SIDE VIEWS	REV E	8/31/90
DWG 7.8* (Sheet 2 of 4)	EXTERNAL VIEWS TOP/BOTTOM	REV E	8/23/90
DWG 7.8* (Sheet 3 of 4)	EXTERNAL PENETRATIONS/TILE (AFT)	REV E	9/21/90
DWG 7.8 (Sheet 4 of 4)	EXTERNAL POST TEMPERATURES	REV E	8/23/90
TBL 7–I	VENDOR DRAWING REFERENCES	REV E–5	4/7/95
	Section 8 Data Processing		
DWG 8.1 (Sheet 1 of 1)	COMPUTER INPUT/OUTPUT FUNCTION	REV E	8/23/96
DWG 8.2 (Sheet 1 of 1)	BACKUP FLIGHT CONTROLLER	REV E	9/4/90
DWG 8.3	(RESERVED)		
DWG 8.4	(RESERVED)		
DWG 8.5 (Sheet 1 of 1)	MASS MEMORY	REV E	8/28/90

*Flown in Systems Data Book.

Item	Title	Rev/DCN	Signoff date
	Section 8 Data Processing (concluded)		
DWG 8.6 (Sheet 1 of 1)	MULTIFUNCTION CRT DISPLAY SYSTEM	REV E–6	6/4/96
DWG 8.7* (Sheet 1 of 3)	DPS ELECTRICAL POWER LOSS	REV E–2	10/9/92
DWG 8.7 (Sheet 2 of 3)	DPS ELECTRICAL POWER LOSS	REV E–2	10/9/92
DWG 8.7 (Sheet 3 of 3)	DPS ELECTRICAL POWER LOSS	REV E	8/28/90
DWG 8.8 (Sheet 1 of 3)	MULTIPLEXER/DEMULTIPLEXER	REV E–6	5/15/96
DWG 8.8 (Sheet 2 of 3)	MULTIPLEXER/DEMULTIPLEXER	REV E	8/24/90
DWG 8.8 (Sheet 3 of 3)	MULTIPLEXER/DEMULTIPLEXER	REV E–5	1/17/95
DWG 8.9 (Sheet 1 of 1)	MASTER TIMING UNIT	REV E–6	1/31/96
DWG 8.10 (Sheet 1 of 1)	TIMERS	REV E–6	9/8/95
DWG 8.11 (Sheet 1 of 2)	PANEL O6 GPC SWITCHES	REV E–2	10/9/92
DWG 8.11 (Sheet 2 of 2)	PANEL O6 GPC SWITCHES	REV E–2	10/9/92
DWG 8.12 (Sheet 1 of 2)	GENERAL PURPOSE COMPUTER (I/O FUNCTIONS)	REV E–6	5/16/96
DWG 8.12 (Sheet 2 of 2)	GENERAL PURPOSE COMPUTER (AP101–S)	REV E–1	8/27/91
DWG 8.13 (Sheet 1 of 4)	ENHANCED MULTIPLEXER/DEMULTIPLEXER	REV E–6	5/15/95
DWG 8.13 (Sheet 2 of 4)	ENHANCED MULTIPLEXER/DEMULTIPLEXER	REV E–2	3/17/92
DWG 8.13 (Sheet 3 of 4)	ENHANCED MULTIPLEXER/DEMULTIPLEXER	REV E–2	2/9/93
DWG 8.13 (Sheet 4 of 4)	ENHANCED MULTIPLEXER/DEMULTIPLEXER	REV E–5	1/17/95
TBL 8–I	VENDOR DRAWING REFERENCES	REV E–4	9/27/94

*Flown in Systems Data Book.

Item	Title	Rev/DCN	Signoff date
	Section 9 GN&C		
DWG 9.1 (Sheet 1 of 2)	G&C DEDICATED DISPLAYS	REV E–6	7/3/96
DWG 9.1 (Sheet 2 of 2)	G&C DEDICATED DISPLAYS	REV E–6	7/3/96
DWG 9.2 (Sheet 1 of 2)	TACAN (GOULD)	REV E–6	6/3/96
DWG 9.2 (Sheet 2 of 2)	TACAN (COLLINS)	REV E–6	6/3/96
DWG 9.3 (Sheet 1 of 1)	RADAR ALTIMETER	REV E–5	2/1/95
DWG 9.4 (Sheet 1 of 1)	MICROWAVE SCANNING BEAM	REV E	9/4/90
DWG 9.5 (Sheet 1 of 1)	COAS	REV E	9/7/90
DWG 9.6 (Sheet 1 of 3)	STAR TRACKER	REV E–6	7/3/96
DWG 9.6 (Sheet 2 of 3)	IMAGE DISSECTOR TUBE (IDT) STAR TRACKER	REV E–3	10/5/93
DWG 9.6 (Sheet 3 of 3)	SOLID STATE STAR TRACKER (SSST)	REV E–5	2/13/95
DWG 9.7 (Sheet 1 of 1)	INERTIAL MEASUREMENT UNIT – HAINS	REV E–4	8/29/94
DWG 9.8 (Sheet 1 of 1)	RATE GYROS/BODY MOUNTED ACCELEROMETERS	REV E–6	7/26/96
DWG 9.9 (Sheet 1 of 1)	AIR DATA SYSTEM	REV E–4	8/8/94
DWG 9.10 (Sheet 1 of 1)	FCS MODE SWITCHES	REV E–1	10/21/91
DWG 9.11 (Sheet 1 of 1)	AERO SURFACE SIGNAL FLOW	REV E	8/27/90
DWG 9.12 (Sheet 1 of 1)	TRAJECTORY CONTROL SENSOR	REV E–5	1/30/95
DWG 9.13 (Sheet 1 of 1)	OMS/TVC SIGNAL FLOW AND DRIVERS	REV E–6	7/26/96
DWG 9.14 (Sheet 1 of 1)	ME AND SRB TVC ACTUATORS	REV E–6	7/3/96
DWG 9.15 (Sheet 1 of 1)	ME & SRB TVC SIGNAL FLOW	REV E–5	3/31/95
DWG 9.16 (Sheet 1 of 2)	AERO SURFACE ACTUATORS	REV E–4	8/8/94

Item	Title	Rev/DCN	Signoff date
	Section 9 GN&C (concluded)		
DWG 9.16 (Sheet 2 of 2)	AERO SURFACE ACTUATORS	REV E–4	8/8/94
DWG 9.17	RHC/SBTC/RPTA/THC	REV E	9/4/90
DWG 9.18 (Sheet 1 of 1)	GLOBAL POSITIONING SYSTEM (GPS) OI–25 AND OI–26A	REV E–6	7/30/96
DWG 9.19	(RESERVED)		
DWG 9.20 (Sheet 1 of 1)	HEADS UP DISPLAY	REV E–1	11/5/91
TBL 9–I	VENDOR DRAWING REFERENCES	REV E–5	4/7/95
	Volume II – Sections 10 through 15		
	Section 10 Main Propulsion		
DWG 10.1 (Sheet 1 of 4)	MEC COMMAND TABLE TABLE 10.I	REV E	9/7/90
DWG 10.1 (Sheet 2 of 4)	MASTER EVENTS CONTROLLER OVERVIEW	REV E	9/7/90
DWG 10.1 (Sheet 3 of 4)	MASTER EVENTS CONTROLLER	REV E–1	11/13/91
DWG 10.1 (Sheet 4 of 4)	MASTER EVENTS CONTROLLER	REV E	9/7/90
DWG 10.2 (Sheet 1 of 2)	SOLID ROCKET BOOSTER 1	REV E–4	9/27/94
DWG 10.2 (Sheet 2 of 2)	SOLID ROCKET BOOSTER 2	REV E	9/11/90
DWG 10.3 (Sheet 1 of 1)	ORBITER/ENGINE INTERFACE UNIT	REV E–6	1/31/96
DWG 10.4 (Sheet 1 of 1)	MAIN ENGINE BLOCK I CONTROLLER	REV E	9/7/90
DWG 10.5 (Sheet 1 of 1)	MAIN ENGINE BLOCK I CONTROLLER INTERFACE ELECTRONICS	REV E	9/11/90
DWG 10.6 (Sheet 1 of 1)	MAIN ENGINE BLOCK I INPUT ELECTRONICS	REV E	9/7/90
DWG 10.7 (Sheet 1 of 1)	MAIN ENGINE BLOCK I OUTPUT ELECTRONICS	REV E	9/11/90
DWG 10.8* (Sheet 1 of 1)	MPS HELIUM SUPPLY	REV E	9/7/90
DWG 10.9 (Sheet 1 of 1)	MECHANICAL HYDRAULICS AND PNEUMATICS	REV E–6	1/31/96

Item	Title	Rev/DCN	Signoff date
	Section 10 Main Propulsion (concluded)		
DWG 10.10 (Sheet 1 of 1)	EXTERNAL TANK	REV E–5	2/24/95
DWG 10.11 (Sheet 1 of 1)	MAIN ENGINE LO_2 SYSTEM	REV E–5	2/24/95
DWG 10.12 (Sheet 1 of 1)	MAIN ENGINE LH_2 SYSTEM	REV E–6	6/4/96
DWG 10.13 (Sheet 1 of 1)	MAIN ENGINE	REV E–6	1/31/96
DWG 10.14 (Sheet 1 of 1)	MAIN ENGINE BLOCK I FLIGHT ACCELEROMETER SAFETY CUTOFF SYSTEM	REV E–1	11/13/91
DDWG 10.15 (Sheet 1 of 1)	LO_2 AND LH_2 17–INCH DISCONNECT LATCH	REV E–6	1/30/96
DWG 10.16 (Sheet 1 of 1)	MAIN ENGINE BLOCK II CONTROLLER OVERVIEW	REV E–6	1/31/96
DWG 10.17 (Sheet 1 of 1)	MAIN ENGINE BLOCK II DIGITAL CONTROLLER UNIT	REV E–2	1/28/93
DWG 10.18 (Sheet 1 of 1)	MAIN ENGINE BLOCK II CONTROLLER INTERFACE ELECTRONICS	REV E–2	1/28/93
DWG 10.19 (Sheet 1 of 1)	MAIN ENGINE BLOCK II INPUT ELECTRONICS/FLIGHT ACCELEROMETER SAFETY CUTOFF SYSTEM	REV E–6	1/31/96
DWG 10.20 (Sheet 1 of 1)	MAIN ENGINE BLOCK II CONTROLLER OUTPUT ELECTRONICS	REV E–2	1/28/93
DWG 10.21 (Sheet 1 of 1)	MAIN ENGINE BLOCK II CONTROLLER POWER SUPPLY ELECTRONICS	REV E–2	2/4/93
DWG 10.22	(RESERVED)		
DWG 10.23 (Sheet 1 of 4)	ENHANCED MASTER EVENTS CONTROLLER OVERVIEW	REV E–4	9/27/94
DWG 10.23 (Sheet 2 of 4)	EMEC 1 AND 2 POWER ON	REV E–4	9/27/94
DWG 10.23 (Sheet 3 of 4)	ENHANCED MASTER EVENTS CONTROLLER	REV E–4	9/27/94
DWG 10.23 (Sheet 4 of 4)	EMEC COMMAND TABLE	REV E–4	9/27/94
TBL 10–I	(RESERVED)		
TBL 10–II	VENDOR DRAWING REFERENCES	REV E–6	8/14/96

Item	Title	Rev/DCN	Signoff date
	Section 11 OMS/RCS Propulsion		
DWG 11.1* (Sheet 1 of 2)	OMS/RCS INTERCONNECT LEFT POD	REV E–2	12/17/92
DWG 11.1* (Sheet 2 of 2)	OMS/RCS INTERCONNECT RIGHT POD	REV E–2	12/17/92
DWG 11.2 (Sheet 1 of 1)	OMS GAGING	REV E–1	10/1/91
DWG 11.3* (Sheet 1 of 2)	OMS/DRIVERS	REV E	9/4/90
DWG 11.3* (Sheet 2 of 2)	ORBITAL MANEUVERING SYSTEM	REV E	9/4/90
DWG 11.4* (Sheet 1 of 1)	AFT RCS/OMS INTERCONNECT	REV E	9/10/90
DWG 11.5* (Sheet 1 of 2)	AFT RCS MODULE	REV E–3	8/31/93
DWG 11.5* (Sheet 2 of 2)	AFT RCS MODULE	REV E–3	8/31/93
DWG 11.6 (Sheet 1 of 2)	FWD RCS MODULE	REV E–3	8/23/93
DWG 11.6* (Sheet 2 of 2)	FWD RCS MODULE	REV E–1	10/1/91
DWG 11.7 (Sheet 1 of 1)	HEATER CONTROL SYS FWD RCS	REV E	9/10/90
DWG 11.8 (Sheet 1 of 2)	HEATER CONTROL SYS OMS POD	REV E–2	1/11/93
DWG 11.8 (Sheet 2 of 2)	HEATER CONTROL SYSTEM POD HEATERS	REV E–2	1/11/93
DWG 11.9 (Sheet 1 of 1)	HEATER CONTROL SYS AFT OMS/RCS CROSSFEED	REV E–2	1/11/93
DWG 11.10 (Sheet 1 of 3)	RCS SIGNAL FLOW AND DRIVERS	REV E	9/4/90
DWG 11.10 (Sheet 2 of 3)	RCS SIGNAL FLOW AND DRIVERS	REV E	9/4/90
DWG 11.10 (Sheet 3 of 3)	RCS SIGNAL FLOW AND DRIVERS	REV E	9/11/90
DWG 11.11 (Sheet 1 of 2)	ORBITAL REFUELING SYSTEM	REV E	9/4/90
DWG 11.11 (Sheet 2 of 2)	ORBITAL REFUELING SYSTEM	REV E	9/4/90
TBL 11–I	VENDOR OR DRAWING REFERENCES	REV E–2	2/19/93

*Flown in Systems Data Book.

Item	Title	Rev/DCN	Signoff date
	Section 12 APU/Hydraulics Systems		
DWG 12.1* (Sheet 1 of 2)	AUXILIARY POWER UNIT (APU)	REV E–4	9/27/94
DWG 12.1* (Sheet 2 of 2)	AUXILIARY POWER UNIT (APU)	REV E–4	9/27/94
DWG 12.2 (Sheet 1 of 3)	HYDRAULIC/APU LINE SCHEMATIC	REV E–1	11/21/91
DWG 12.2 (Sheet 2 of 3)	HYDRAULIC LINE SCHEMATIC	REV E–1	11/21/91
DWG 12.2 (Sheet 3 of 3)	HYDRAULIC/IAPU LINE SCHEMATIC	REV E–3	9/28/93
DWG 12.3* (Sheet 1 of 3)	HYDRAULIC POWER SYSTEM	REV E–5	4/5/95
DWG 12.3* (Sheet 2 of 3)	HYDRAULIC POWER SYSTEM	REV E–2	2/2/93
DWG 12.3* (Sheet 3 of 3)	HYDRAULIC POWER SYSTEM	REV E–6	7/24/96
DWG 12.4* (Sheet 1 of 1)	APU/HYD WATER SPRAY BOILER	REV E–6	5/8/96
TBL 12–I	VENDOR DRAWING REFERENCES	REV E–2	2/19/93
	Section 13 Landing Gear		
DWG 13.1 (Sheet 1 of 2)	LANDING GEAR	REV E–2	11/4/92
DWG 13.1 (Sheet 2 of 2)	LANDING GEAR	REV E–2	1/29/93
DWG 13.2 (Sheet 1 of 1)	BRAKES/REDUNDANT WOW	REV E–5	2/23/95
DWG 13.3 (Sheet 1 of 1)	NOSE WHEEL STEERING	REV E–2	11/6/92
DWG 13.4 (Sheet 1 of 2)	DRAG CHUTE MECHANICAL	REV E–2	5/28/92
DWG 13.4 (Sheet 2 of 2)	DRAG CHUTE ELECTRICAL	REV E–2	5/28/92
TBL 13–I	VENDOR DRAWING REFERENCES	REV E–2	2/19/93

*Flown in Systems Data Book.

Item	Title	Rev/DCN	Signoff date
	Section 14 Payload Bay		
DWG 14.1* (Sheet 1 of 3)	PAYLOAD BAY DOORS/RADIATOR OVERVIEW	REV E	10/23/90
DWG 14.1* (Sheet 2 of 3)	PAYLOAD BAY DOOR LATCHES AND EVA SLIDEWIRE	REV E–6	8/22/96
DWG 14.1* (Sheet 3 of 3)	RADIATORS DEPLOY/STOW	REV E–6	5/20/96
DWG 14.2* (Sheet 1 of 2)	PLBD OPEN/CLOSE H/W OVERVIEW	REV E–4	7/7/94
DWG 14.2* (Sheet 2 of 2)	PLBD SOFTWARE OVERVIEW (PASS)	REV E–4	7/7/94
DWG 14.3 (Sheet 1 of 3)	PAYLOAD RETENTION LATCH ELECTRICAL	REV E–4	7/7/94
DWG 14.3 (Sheet 2 of 3)	PAYLOAD RETENTION LATCH–MECH	REV E	10/2/90
DWG 14.3 (Sheet 3 of 3)	PROTECTIVE COVER REMOVAL SYSTEM	REV E	10/12/90
DWG 14.4 (Sheet 1 of 8)	RMS D&C PANEL	REV E–2	12/18/92
DWG 14.4 (Sheet 2 of 8)	DIGITAL SPA	REV E–6	7/18/96
DWG 14.4 (Sheet 3 of 8)	RMS CONTROL SYSTEM (SPA AND MOTOR CONTROL)	REV E–1	10/22/91
DWG 14.4 (Sheet 4 of 8)	RMS CONTROL SYSTEM (BDA)	REV E	8/24/90
DWG 14.4 (Sheet 5 of 8)	RMS CONTROL SYSTEM (EEEU AND MOTOR CONTROL)	REV E–1	11/6/91
DWG 14.4 (Sheet 6 of 8)	RMS THERMOSTAT/HEATER ELEMENTS	REV E	8/31/90
DWG 14.4* (Sheet 7 of 8)	RMS MECHANICAL SYSTEM OVERVIEW	REV E	10/4/90
DWG 14.4* (Sheet 8 of 8)	RMS ELECTRICAL SYSTEM OVERVIEW	REV E	9/19/90
DWG 14.5 (Sheet 1 of 2)	RMS/SOFTWARE OVERVIEW	REV E–6	8/4/95
DWG 14.5 (Sheet 2 of 2)	RMS/SOFTWARE OVERVIEW	REV E–6	8/4/95
DWG 14.6 (Sheet 1 of 3)	PORT MANIPULATOR POSITIONING MECHANISM–MANIPULATOR RETENTION LATCHES ELECTRICAL	REV E	8/31/90

*Flown in Systems Data Book.

Item	Title	Rev/DCN	Signoff date
	Section 14 Payload Bay (continued)		
DWG 14.6 (Sheet 2 of 3)	PORT MANIPULATOR POSITIONING MECHANISM–MANIPULATOR RETENTION LATCHES MECHANICAL	REV E	8/31/90
DWG 14.6 (Sheet 3 of 3)	PORT RMS JETTISON ELECTRICAL	REV E	9/19/90
DWG 14.7 (Sheet 1 of 3)	FLIGHT RELEASABLE GRAPPLE FIXTURE	REV E–1	11/21/91
DWG 14.7 (Sheet 2 of 3)	RIGIDIZE SENSING GRAPPLE FIXTURE	REV E–1	11/21/91
DWG 14.7 (Sheet 3 of 3)	ELECTRICAL FLIGHT GRAPPLE FIXTURE	REV E–1	11/12/91
DWG 14.8 (Sheet 1 of 3)	MCIU FIRMWARE OVERVIEW	REV E	9/7/90
DWG 14.8 (Sheet 2 of 3)	MCIU FIRMWARE SYNCIR ROUTINE	REV E	9/7/90
DWG 14.8 (Sheet 3 of 3)	MCIU FIRMWARE MEMORY MAP	REV E	9/7/90
DWG 14.9 (Sheet 1 of 5)	SPDS Y_0 ELECTRICAL	REV E	8/31/90
DWG 14.9 (Sheet 2 of 5)	SPDS RDU ELECTRICAL	REV E	8/31/90
DWG 14.9 (Sheet 3 of 5)	SPDS PAYLOAD RELEASE SYSTEM AND PEDESTAL DRIVE TRANSFER SYSTEM	REV E	9/10/90
DWG 14.9 (Sheet 4 of 5)	STABILIZED PAYLOAD DEPLOYMENT SYSTEM MECHANICAL OVERVIEW	REV E	9/10/90
DWG 14.9 (Sheet 5 of 5)	STABILIZED PAYLOAD DEPLOYMENT SYSTEM MECHANICAL OVERVIEW	REV E	9/10/90
DWG 14.10 (Sheet 1 of 1)	NEW RMS MCIU (–5 MCIU)	REV E–1	8/27/91
DWG 14.11 (Sheet 1 of 4)	NEW MCIU FIRMWARE OVERVIEW	REV E–1	8/27/91
DWG 14.11 (Sheet 2 of 4)	NEW MCIU DETAILED FIRMWARE	REV E–1	8/27/91
DWG 14.11 (Sheet 3 of 4)	NEW MCIU DETAILED FIRMWARE	REV E–1	8/27/91
DWG 14.11 (Sheet 4 of 4)	NEW MCIU FIRMWARE MEMORY MAP	REV E–1	8/27/91
DWG 14.12 (Sheet 1 of 3)	ROEU ELECTRICAL	REV E–1	11/14/91
DWG 14.12 (Sheet 2 of 3)	REMOTELY OPERATED ELECTRICAL UMBILICAL MECHANICAL OVERVIEW	REV E–1	11/14/91

Item	Title	Rev/DCN	Signoff date
	Section 16 Communications Systems (continued)		
DWG 16.1 (Sheet 6 of 6)	PAYLOAD SYSTEM OVERVIEW	REV E–6	4/11/96
DWG 16.2 (Sheet 1 of 3)	S–BAND PM TRANSPONDER	REV E–4	8/2/94
DWG 16.2 (Sheet 2 of 3)	S–BAND PM AMPLIFIER SYSTEM	REV E–6	2/14/96
DWG 16.2 (Sheet 3 of 3)	S–BAND PM/FM SWITCH BEAM ANTENNA SYSTEM	REV E–4	8/2/94
DWG 16.3 (Sheet 1 of 3)	NETWORK SIGNAL PROCESSOR RETURN LINK	REV E–6	7/22/96
DWG 16.3 (Sheet 2 of 3)	NETWORK SIGNAL PROCESSOR FORWARD LINK	REV E	11/2/90
DWG 16.3 (Sheet 3 of 3)	COMSEC 1/2	REV E–6	7/26/96
DWG 16.4 (Sheet 1 of 2)	TEXT AND GRAPHICS SYSTEM	REV E–2	11/4/92
DWG 16.4 (Sheet 2 of 2)	SECURE TEXT & GRAPHICS SYSTEM TELEVISION INTERFACES	REV E–2	12/18/92
DWG 16.5 (Sheet 1 of 2)	KU BAND SYSTEM	REV E–3	9/27/93
DWG 16.5 (Sheet 2 of 2)	KU BAND SYSTEM	REV E–6	7/16/96
DWG 16.6 (Sheet 1 of 1)	PAYLOAD DATA INTERFACE PANEL (PDIP)	REV E–6	3/18/96
DWG 16.7 (Sheet 1 of 1)	VHF RADIO AND AUDIO RADIO INTERFACE UNIT (ARIU)	REV E–6	5/31/96
DWG 16.8 (Sheet 1 of 1)	S–BAND FM SYSTEM	REV E	10/10/90
DWG 16.9 (Sheet 1 of 2)	UHF ORBITER TRANSCEIVER	REV E–6	7/19/96
DWG 16.9 (Sheet 2 of 2)	OPERATIONAL UHF EVC BACKPACK TRANSCEIVER	REV E–6	7/19/96
DWG 16.10 (Sheet 1 of 7)	AUDIO PANEL/ATU PLT, CDR	REV E–6	7/16/96
DWG 16.10 (Sheet 2 of 7)	AUDIO PANEL/ATU MS, PS, AND OS SU	REV E–6	7/15/96
DWG16.10C,D,E (Sheet 3 of 7)	AUDIO PANEL/ATU MID DECK SU AND CCU	REV E–6	7/16/96
DWG 16.10 (Sheet 4 of 7)	AUDIO PANEL/ATU AIRLOCK	REV E–6	5/29/96

Item	Title	Rev/DCN	Signoff date
	Section 16 Communications Systems (continued)		
DWG 16.10B (Sheet 5 of 7)	AUDIO PANEL/ATU AIRLOCK 1 BACKUP	REV E–6	4/5/96
DWG16.10B (Sheet 6 of 7)	AUDIO PANEL/ATU MID DECK AUDIO/AIRLOCK 2 BACKUP	REV E–6	7/16/96
DWG 16.10B (Sheet 7 of 7)	AUDIO PANEL/ATU OS AND OS SU	REV E–6	7/16/96
DWG 16.11 (Sheet 1 of 2)	AUDIO/ACCU	REV E–6	7/22/96
DWG 16.11 (Sheet 2 of 2)	AUDIO/ACCU	REV E	10/26/90
DWG 16.12 (Sheet 1 of 1)	TV CONTROL	REV E–6	7/16/96
DWG 16.13 (Sheet 1 of 5)	TV/CAMERA POWER	REV E–6	5/29/96
DWG 16.13 (Sheet 2 of 5)	TV/CAMERA – SIT MONITOR	REV E–6	3/15/96
DWG 16.13 (Sheet 3 of 5)	TV/EMU	REV E–1	10/2/90
DWG 16.13 (Sheet 4 of 5)	AIRBORNE DIGITIZER UNIT SECURE TELEVISION SYSTEM	REV E–1	10/23/90
DWG 16.13 (Sheet 5 of 5)	COLOR TV MONITOR (CTVM)	REV E–1	11/20/91
DWG 16.14 (Sheet 1 of 2)	S–BAND PAYLOAD INTERROGATOR	REV E	10/26/90
DWG 16.14 (Sheet 2 of 2)	S–BAND PAYLOAD INTERROGATOR	REV E–6	7/19/96
DWG 16.15 (Sheet 1 of 1)	PAYLOAD SIGNAL PROCESSOR	REV E–6	7/19/96
DWG 16.16 (Sheet 1 of 1)	SRB DFI FLIGHT RECORDER	REV E	9/12/90
DWG 16.17 (Sheet 1 of 1)	GROUND COMMAND INTERFACE LOGIC (GCIL) CONTROLLER	REV E–6	3/11/96
DWG 16.18 (Sheet 1 of 1)	OPS RECORDERS	REV E–6	4/1/96
DWG 16.19 (Sheet 1 of 1)	P/L RECORDER	REV E–6	4/1/96
DWG 16.20 (Sheet 1 of 2)	WIRELESS CREW COMM SYS AUDIO INTERFACE UNIT	REV E–6	3/11/96
DWG 16.20 (Sheet 2 of 2)	WIRELESS CREW COMM SYS CREW REMOTE UNIT	REV E–6	5/6/96

Item	Title	Rev/DCN	Signoff date
	Section 16 Communications Systems (concluded)		
DWG 16.21	(RESERVED)		
DWG 16.22	(RESERVED)		
DWG 16.23 (Sheet 1 of 1)	EXTENDED RANGE PAYLOAD COMM LINK	REV E–3	9/27/93
DWG 16.24 (Sheet 1 of 1)	8MM VIDEO TAPE RECORDER	REV E–6	5/29/96
DWG 16.25 (Sheet 1 of 1)	COMM SYSTEM POWER DISTRIBUTION	REV E–6	5/1/96
DWG 16.26 (Sheet 1 of 1)	COMM MDM I/F	REV E–6	3/11/96
TBL 16–I	VENDOR DRAWING REFERENCES	REV E–3	10/15/93
	Section 17 Instrumentation		
DWG 17.1 (Sheet 1 of 3)	OPERATIONAL INSTRUMENTATION DSC'S AND MDM'S	REV E–1	11/4/91
DWG 17.1 (Sheet 2 of 3)	OI DEDICATED SIGNAL CONDITIONERS	REV E–2	11/4/92
DWG 17.1 (Sheet 3 of 3)	OI INST MDM	REV E	10/23/90
DWG 17.2 (Sheet 1 of 1)	OI PCM MASTER UNIT	REV E–6	7/16/96
DWG 17.3 (Sheet 1 of 1)	PAYLOAD DATA INTERLEAVER	REV E–6	7/26/96
DWG 17.4	(RESERVED)		
DWG 17.5	(RESERVED)		
DWG 17.6	(RESERVED)		
DWG 17.7	(RESERVED)		
DWG 17.8 (Sheet 1 of 1)	THERMAL IMPULSE PRINTER SYSTEM (TIPS)	REV E–6	3/11/96
DWG 17.9	(RESERVED)		
DWG 17.10 (Sheet 1 of 1)	BIO MEDICAL INSTRUMENTATION	REV E	10/10/90
DWG 17.11 (Sheet 1 of 1)	MADS EQUIP	REV E–6	7/25/96
DWG 17.12C,D (Sheet 1 of 1)	MODULE AUXILIARY DATA SYSTEM RECORDER/ CONTROLLER SUBSYSTEM	REV E–6	7/29/96

Item	Title	Rev/DCN	Signoff date
	Section 17 Instrumentation (concluded)		
DWG 17.13 (Sheet 1 of 1)	ORBITER EXPERIMENTS SUPPORT SYSTEM FOR OEX	REV E–6	4/11/96
TBL 17–I	VENDOR DRAWING REFERENCES	REV E	11/2/90
	Section 18 Escape System		
DWG 18.1* (Sheet 1 of 1)	ESCAPE PANEL	REV E–4	7/15/94
DWG 18.2* (Sheet 1 of 1)	POLE CREW ESCAPE SYSTEM	REV E–4	7/7/94
DWG 18.3* (Sheet 1 of 1)	EMERGENCY EGRESS SLIDE/SKYGENIE	REV E–4	7/7/94
DWG 18.4 (Sheet 1 of 1)	LAUNCH/ENTRY SUIT AND QUICK–DON MASK	REV E–6	5/10/96
DWG 18.5 (Sheet 1 of 3)	SURVIVAL GEAR RAFT/HARNESS/PARACHUTE	REV E–6	5/10/96
DWG 18.5 (Sheet 2 of 3)	SURVIVAL GEAR	REV E–6	5/20/96
DWG 18.5 (Sheet 3 of 3)	LES/ACES COMPONENTS AND SEAT INTERFACE	REV E–6	5/20/96
DWG 18.6 (Sheet 1 of 1)	PERSONAL PARACHUTE ASSEMBLY (PPA)	REV E–4	8/4/94
DWG 18.7 (Sheet 1 of 1)	SIDE HATCH JETTISON	REV E–1	11/18/91
DWG 18.8 (Sheet 1 of 1)	ADVANCED CREW ESCAPE SUIT & THERMAL ELECTRIC LIQUID COOLING UNIT & QUICK DON MASK	REV E–6	5/20/96
TBL 18–I	VENDOR DRAWING REFERENCES	REV E	11/25/91
	Section 19 Structures		
DWG 19.1 (Sheet 1 of 6)	PAYLOAD BAY OVERVIEW 1307 BULKHEAD LOOKING AFT	REV E	9/7/90
DWG 19.1 (Sheet 2 of 6)	PAYLOAD BAY OVERVIEW 582/576 BULKHEAD LOOKING AFT	REV E	9/7/90
DWG 19.1* (Sheet 3 of 6)	STRUCTURES AND SYSTEMS LOCATION	REV E	9/26/90
DWG 19.1* (Sheet 4 of 6)	STRUCTURES AND SYSTEMS LOCATIONS	REV E	10/17/90
DWG 19.1* (Sheet 5 of 6)	STRUCTURES AND SYSTEMS LOCATIONS	REV E	10/3/90

*Flown in Systems Data Book.

Item	Title	Rev/DCN	Signoff date
	Section 19 Structure (concluded)		
DWG 19.1* (Sheet 6 of 6)	STRUCTURES AND SYSTEMS LOCATIONS	REV E	9/7/90
DWG 19.2 (Sheet 1 of 1)	SRB/ET CONFIGURATION	REV E	8/24/90
DWG 19.3 (Sheet 1 of 3)	PAYLOAD BAY OVERVIEW (LOOKING INBOARD AND DOWN)	REV E	9/6/90
DWG 19.3 (Sheet 2 of 3)	PAYLOAD BAY OVERVIEW PORT SIDE	REV E	9/6/90
DWG 19.3 (Sheet 3 of 3)	PAYLOAD BAY OVERVIEW STARBOARD SIDE	REV E	9/6/90
DWG 19.4* (Sheet 1 of 3)	EXTERNAL SIDE VIEWS	REV E	9/6/90
DWG 19.4* (Sheet 2 of 3)	EXTERNAL VIEWS TOP/BOTTOM	REV E	9/6/90
DWG 19.4* (Sheet 3 of 3)	EXTERNAL PENETRATIONS/TILE (AFT)	REV E	9/6/90
	Section 20 Displays and Controls		
DWG 20.1 (Sheet 1 of 4)	DISPLAYS AND CONTROLS FORWARD STATIONS	REV E–3	9/9/93
DWG 20.1 (Sheet 2 of 4)	DISPLAYS AND CONTROLS FORWARD STATIONS	REV E–2	1/28/93
DWG 20.1 (Sheet 3 of 4)	DISPLAYS AND CONTROLS FORWARD STATIONS	REV E–1	11/14/91
DWG 20.1 (Sheet 4 of 4)	DISPLAYS AND CONTROLS FORWARD STATIONS	REV E	10/9/90
DWG 20.2 (Sheet 1 of 3)	DISPLAYS AND CONTROLS AFT STATIONS	REV E–2	2/1/93
DWG 20.2 (Sheet 2 of 3)	DISPLAYS AND CONTROLS AFT STATIONS AND MISSION UNIQUE PANELS	REV E–1	11/8/91
DWG 20.2 (Sheet 3 of 3)	DISPLAYS AND CONTROLS AFT STATIONS	REV E–1	11/14/91
DWG 20.3 (Sheet 1 of 1)	DISPLAYS AND CONTROLS MID DECK STATIONS	REV E–2	2/1/93
DWG 20.4 (Sheet 1 of 1)	DISPLAYS AND CONTROLS AIRLOCK	REV E–4	8/1/94
TBL 20–I	VENDOR DRAWING REFERENCES	REV E	11/5/90

*Flown in Systems Data Book.

J I H G F E D C B A

ESS BUSES — PRFLT BUSES — PAYLOAD BUSES

DATE: 02/12/96	NAME: LAM	VERSION: BPT: 17
DATE: 03/06/96	NAME: JMB	VERSION: BPT: 18
DATE: 03/21/96	NAME: MDU	VERSION: INK: 6

FC1 — MNA MPC1 — MNB MPC2 — FC2

$V_{MNA\ MPC1}$ $V_{MNB\ MPC2}$ $V_{MNC\ MPC3}$

$V_{CNTLAB1}$ $V_{CNTLAB2}$ $V_{CNTLAB3}$ $V_{CNTLBC1}$ $V_{CNTLBC2}$ $V_{CNTLBC3}$ $V_{CNTLCA1}$ $V_{CNTLCA2}$ $V_{CNTLCA3}$

FLIGHT DECK PANELS 1A — F9 ESS1BC VOLTS — FC1 TO ESS1BC OFF — MNB/C TO ESS1BC — MNB TO ESS1BC ON — MNC TO ESS1BC ON

$V_{ESS1BC\ FD}$ $V_{ESS1BC\ DA1}$ $V_{ESS1BC\ APC4}$

F29 10A — F30 10A — F2 7.5A — F4 7.5A — F10 7.5A — F7 10A — F3 15A — F8 15A — F10 10A — F9 10A — F6 5A — F5 5A

RPC 10A — RPC 15A

$V_{ESS1BC\ FP\&LC1}$ $V_{ESS1BC\ MPC1}$ $V_{ESS1BC\ 013\&R14}$ $V_{ESS1BC\ ML86B}$ $V_{ESS1BC\ CRYO\ 2}$ $V_{ESS1BC\ CRYO\ 4}$ $V_{ESS1BC\ ALC1}$

ESS1BC VOLTS

$V_{PRFLT1\ M1A1A4&A14}$ — T-0 UMB — $V_{PRFLT1\ GSE}$

F9 15A — F10 5A — F7 10A

$V_{PRFLT1\ FP\&LC1}$ $V_{PRFLT1\ MMC2&CRYO1&4}$ $V_{PRFLT1\ ALC1}$ $V_{PRFLT1\ FMC1}$

FLIGHT DECK PANELS 1A — F9 ESS2CA VOLTS — FC2 TO ESS2CA OFF — MNC/A TO ESS2CA — MNC TO ESS2CA ON — MNA TO ESS2CA ON

$V_{ESS2CA\ FD}$ $V_{ESS2CA\ DA2}$ $V_{ESS2CA\ APC5}$

F32 10A — F33 10A — F2 7.5A — F4 7.5A — F10 7.5A — F7 10A — F3 15A — F8 15A — F10 10A — F9 10A — F6 5A

RPC 10A — RPC 15A

$V_{ESS2CA\ FP\&LC2}$ $V_{ESS2CA\ MPC2}$ $V_{ESS2CA\ 013\&R14}$ $V_{ESS2CA\ ML86B}$ $V_{ESS2CA\ CRYO\ 1}$ $V_{ESS2CA\ AP\&LC2}$

ESS2CA VOLTS

$V_{PRFLT2\ M23A23&6}$ — T-0 UMB — $V_{PRFLT2\ GSE}$

F9 15A — F10 5A — F11 5A — F7 10A

$V_{PRFLT2\ FP\&LC2}$ $V_{PRFLT2\ FP\&LC3}$ $V_{PRFLT2\ MMC4&CRYO2&3}$ $V_{PRFLT2\ ALC2}$ $V_{PRFLT2\ FMC2}$ $V_{PRFLT2\ FMC3}$ $V_{PRFLT2\ ALC3}$

FLIGHT DECK PANELS 1A — F9 ESS3AB VOLTS — FC3 TO ESS3AB OFF — MNA/B TO ESS3AB — MNA TO ESS3AB ON — MNB TO ESS3AB ON

$V_{ESS3AB\ FD}$ $V_{ESS3AB\ DA3}$ $V_{ESS3AB\ APC6}$

F29 10A — F30 10A — F2 7.5A — F4 7.5A — F10 7.5A — F7 10A — F3 15A — F8 15A — F10 10A — F9 10A — F5 5A

RPC 10A — RPC 15A

$V_{ESS3AB\ FP\&LC3}$ $V_{ESS3AB\ MPC3}$ $V_{ESS3AB\ 013}$ $V_{ESS3AB\ ML86B}$ $V_{ESS3AB\ CRYO\ 3}$ $V_{ESS3AB\ AP\&LC3}$

ESS3AB VOLTS

$V_{MNA\ MPC1}$ — RPC 15A ×3, RPC 20A ×2 — CAB PLA ON — AUX PL ON — AUXPLA ON — AUXPLB ON — CAB PLB ON

V_{CABPL1} V_{CABPL2} V_{CABPL3} V_{AUXPLA} V_{AUXPLB}

$V_{MNB\ MPC2}$ — RPC 15A ×4, RPC 20A ×1

ORB — PL BAY

$V_{MNB\ APC2}$ — 80A — AFT PL MNB ON — AFT PLB CURRENT — V_{AFTPLB}

$V_{MNC\ APC3}$ — 80A — AFT PL MNC ON — AFT PLC CURRENT — V_{AFTPLC}

$V_{MNB\ DA2}$ — MNB TO PRIPL ON — (2 WIRES) — F39(40) 15OAI 21 — F41(42) 15OAI 21 — V_{PRIPL}

$V_{MNC\ DA3}$ — FC3 TO PRIPL ON — MNC TO PRIPL ON — FC3 TO MNC ON & FC3 STRUCT RET ON — FC3 STRUCTURE RET ON

$V_{FC3\ RTN}$ $V_{MNC\ RTN}$ $V_{PL\ RTN}$

BUS NOMENCLATURE DEFINITION

DA	DISTRIBUTION ASSEMBLY
GSE	GROUND SUPPORT EQUIPMENT
FPC	FORWARD POWER CONTROLLER
MPC	MID POWER CONTROLLER
APC	AFT POWER CONTROLLER
FLC	FORWARD LOAD CONTROLLER
ALC	AFT LOAD CONTROLLER
FMC	FORWARD MOTOR CONTROL
MMC	MID MOTOR CONTROL
AMC	AFT MOTOR CONTROL
FP&LC	FORWARD POWER AND FORWARD LOAD CONTROLLERS
AP&LC	AFT POWER AND AFT LOAD CONTROLLERS
MA73C	MID DECK PANEL MA73C
ML86B	MID DECK PANEL ML86B
FD	FLIGHT DECK
M1A1A4&A14	MPC1, APC1, APC4 AND PANEL A14
M23A23&6	MPC2, MPC3, APC2, APC3, APC5 AND APC6
LSRB	LEFT SOLID ROCKET BOOSTER
RSRB	RIGHT SOLID ROCKET BOOSTER
R14	PANEL R14
O13	PANEL O13
O13&R14	PANELS O13 AND R14
O14&A8	PANELS O14 (RJD'S) AND A8 (RMS)
O15&A8(OV-102)	PANELS O15 (RJD'S) AND A8 (RMS)
O15&A7&A8(OV103, 104)	PANELS O15 (RJD'S), A7 (MADS) AND A8 (RMS)
O16RJD	PANEL O16 (RJD'S)
O14	PANEL O14
O15	PANEL O15
O16	PANEL O16
R1A1	PANEL R1A1
A6&A14	PANEL A14 AND A6
A14	PANEL A14
PRIPL	PRIMARY PAYLOAD BUS
SECPL	SECONDARY PAYLOAD BUS
AUXPL	AUXILIARY PAYLOAD BUS
AFTPL	AFT PAYLOAD BUS
CABPL	ORBITER CABIN PAYLOAD BUS
CRYO1(2, 3, 4)	H_2/O_2 CRYO CONTROL BOX 1 (2, 3, 4)
MMC2&CRYO1&4	BUS THAT IS DISTRIBUTED TO BOTH THE MID MOTOR CONTROLLER 2 AND THE H_2/O_2 CRYO CONTROL BOX NO. 1 & 4
MMC4&CRYO2&3	BUS THAT IS DISTRIBUTED TO BOTH THE MID MOTOR CONTROLLER 4 AND THE H_2/O_2 CRYO CONTROL BOX NO. 2 & 3
POD/AMC1(2, 3)	AC AND DC BUSES LOCATED IN THE AMC1(2, 3) THAT ARE GENERATED SPECIFICALLY FOR THE OMS AND AFT RCS SYSTEMS
RCS/FMC1(2, 3)	AC BUSES LOCATED IN THE FMC1(2, 3) THAT ARE GENERATED SPECIFICALLY FOR THE FWD RCS SYSTEMS

CONTROL BUS-PANEL WIRING MATRIX

PANEL \ CNTL BUS	AB1	AB2	AB3	BC1	BC2	BC3	CA1	CA2	CA3
O6	X	X	X	X	X	X	X	X	X
O14	X	X	X				X	X	X
L2A1	X	X	X				X		
L1A2	X	X	X	X	X	X	X	X	X
L1A1							X		
F6	X		X	X	X	X	X	X	X
F2 (OV102)	X			X			X		
C3A7				X			X		
C3A1	X	X	X		X	X		X	X
C3A5	X	X	X		X	X		X	X
C3A6				X			X		
C2A2	X			X			X		
F4 (OV102)					X				
F8	X	X	X	X	X	X	X	X	X
O7	X	X	X		X		X	X	X
O15	X			X		X	X	X	X
R1A2	X	X	X	X	X	X	X	X	X
R2	X	X	X	X	X	X	X	X	X
R4	X	X	X	X	X	X	X	X	X
O16				X	X		X	X	X
O8	X	X	X	X	X	X	X	X	X
O17	X	X	X	X	X	X	X	X	X
R11A1	X	X	X	X	X		X	X	X
R11A2				X	X		X		
R13A2	X	X	X	X	X	X	X	X	X
A1A2	X	X	X	X	X	X	X	X	X
A1A3	X	X	X	X	X	X	X	X	X
A11A1				X	X	X			X
A11A1 EDO UPPER (OV105)	X			X					X
A11A1 EDO LOWER (OV105)		X		X					X
A12	X	X	X	X	X	X	X	X	X
A6A1	X	X	X	X	X	X	X	X	X
A7A1	X			X			X	X	X
A8A2	X			X			X	X	X
A7A2 (OV102)		X		X					X
A13	X			X			X	X	X
A14	X	X	X	X	X	X	X	X	X
A15 TK5 (OV105)				X			X		
A15 EDO (OV105)					X				
MA73C	X	X	X	X	X	X	X	X	X

1. INSTALLED WITH MISSION KIT, FOR ORBITER DOCKING SYSTEM FLIGHTS. SEE DRAWING 2.6-1 FOR MORE DETAIL
2. FOR EDO PALLET POWER CONTROLLER BUSES (EDO MISSIONS ONLY, ALL VEHICLES EXCEPT OV-103), SEE DRAWING 2.5-1 FOR MORE DETAIL
3. ON OV-103 AND OV-104 ONLY, MISSION DEPENDENT
4. BUS IS 'DAISY-CHAINED' THROUGH A SERIES OF PANELS CNTL BUSES ARE FED BY THREE SOURCES, ONE RPC AT EACH END OF THE DAISY CHAIN (PANELS O6 & MA73C) AND A CIRCUIT BREAKER FEED AT THE MID-POINT (PANEL R2). THE BUS NOMENCLATURE IDENTIFIES WHICH MAIN BUS IS PROVIDING THE POWER. EXAMPLE: (CNTLAB1-A MNA RPC FEEDS PANEL O6, A MNB RPC FEEDS MA73C, AND MNC FEEDS PANEL R2 THROUGH A CIRCUIT BREAKER SEE DRAWING 2.2-1 FOR MORE DETAIL
11. SEE TABLE 2-1 FOR DRAWING REFERENCES
10. NOT ON OV102
9. OV102 ONLY
8. FOR READABILITY, ON THIS DRAWING, RPC'S ARE SHOWN WITH POWER LEAD AT LEFT RATHER THAN THE TOP
7. PLACING FC3 TO MNC SW TO ON CAUSES FC3 STRUCT RET CONTACTOR TO CLOSE, ENSURING RETURN PATH FOR MNC CURRENT. PLACING FC3 TO MNC SW TO OFF DOES NOT AFFECT FC3 STRUCT RET CONTACTOR, THE 'OPEN' FUNCTION OF THIS MOTOR SWITCH HAS BEEN DISABLED
6. BUS IS 'DAISY-CHAINED' THROUGH A SERIES OF PANELS SEE DRAWING 2.2-1 FOR MORE DETAIL
5. VOLTAGE SENSING AND SWITCHOVER CIRCUITS, SRB POWER SOURCE TRANSFER TO MNC OCCURS AT <22 VDC FOR 40MS
4. FOR A LISTING OF D&C PANELS RECEIVING POWER FROM THE FOLLOWING BUSES, REFER TO TABLE 1-II-AC1(2, 3), ALL CNTL BUSES, AND ESS1BC1(2CA, 3AB) FD
3. SWITCHING AND CONTROL POWER - GSE ONLY
2. SWITCHING AND CONTROL POWER - ONBOARD OR GSE
1. SWITCHING AND CONTROL POWER - ONBOARD ONLY

NOTES:

* 1 EPS O/V

SIGNATURE		DATE
DSGN	L. DUMIS	11/1/78
DR	L. KEESLER	11/2/79
ENGR	M. MAHER	
ENGR		7/14/82
APP		7/14/82
APP		7/15/82
CADS		7/23/82

NATIONAL AERONAUTICS AND SPACE ADMINISTRATION LYNDON B. JOHNSON SPACE CENTER HOUSTON, TEXAS

EPS OVERVIEW

SPACE SHUTTLE — DWG NO 2.1 — ALL — 126.5 X 34 — PAGE — SHEET 1 OF 1

LTR E — PCN 6

BASIC REV E-6

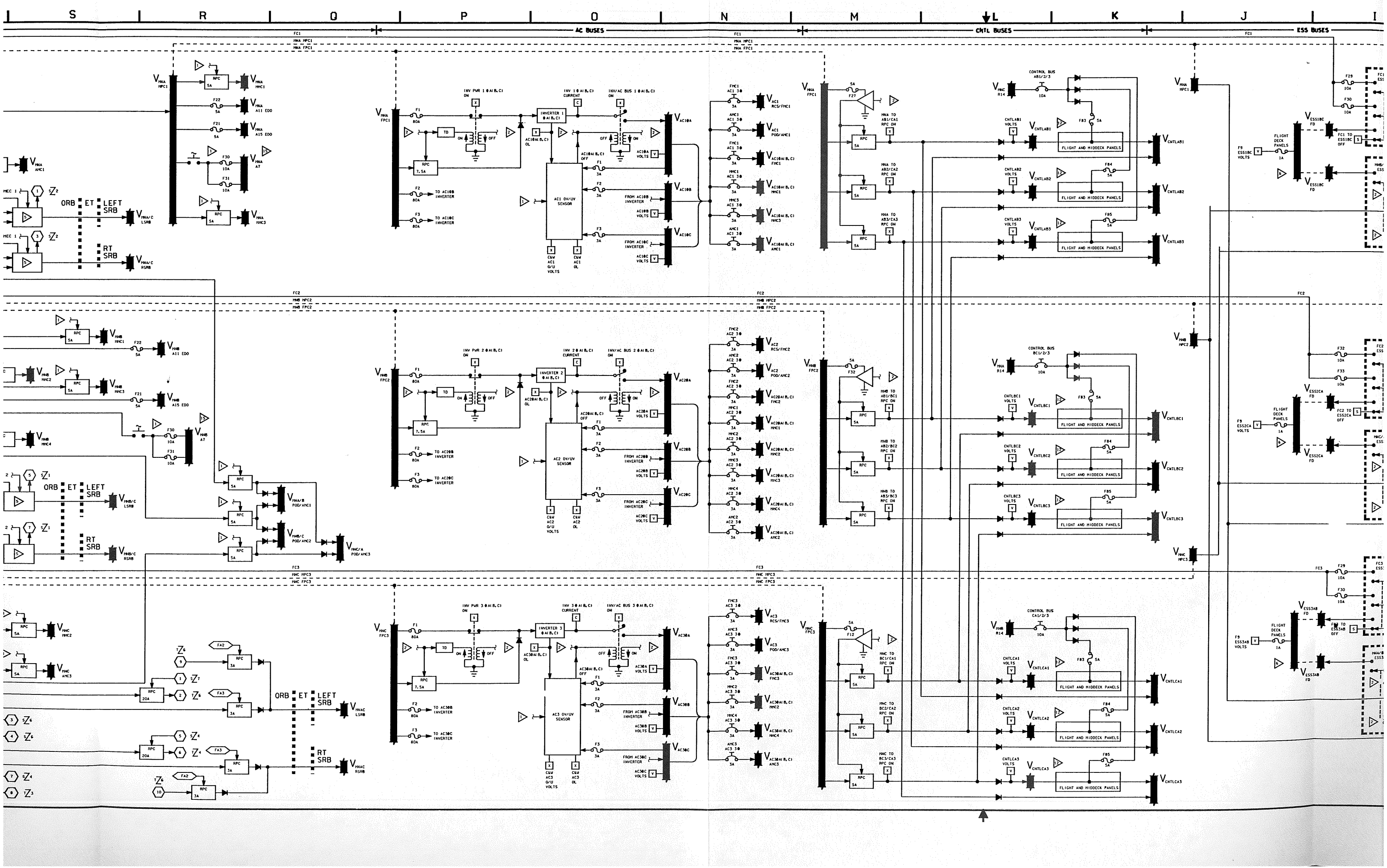

S
R
Q
P
O
N
M
L
K
J
I
AC BUSES
CNTL BUSES
ESS BUSES
ORB
ET
LEFT SRB
RT SRB
INVERTER 1
INVERTER 2
INVERTER 3
AC1 OV/UV SENSOR
AC2 OV/UV SENSOR
AC3 OV/UV SENSOR
FLIGHT AND MIDDECK PANELS
CONTROL BUS AB1/2/3
CONTROL BUS BC1/2/3
CONTROL BUS CA1/2/3

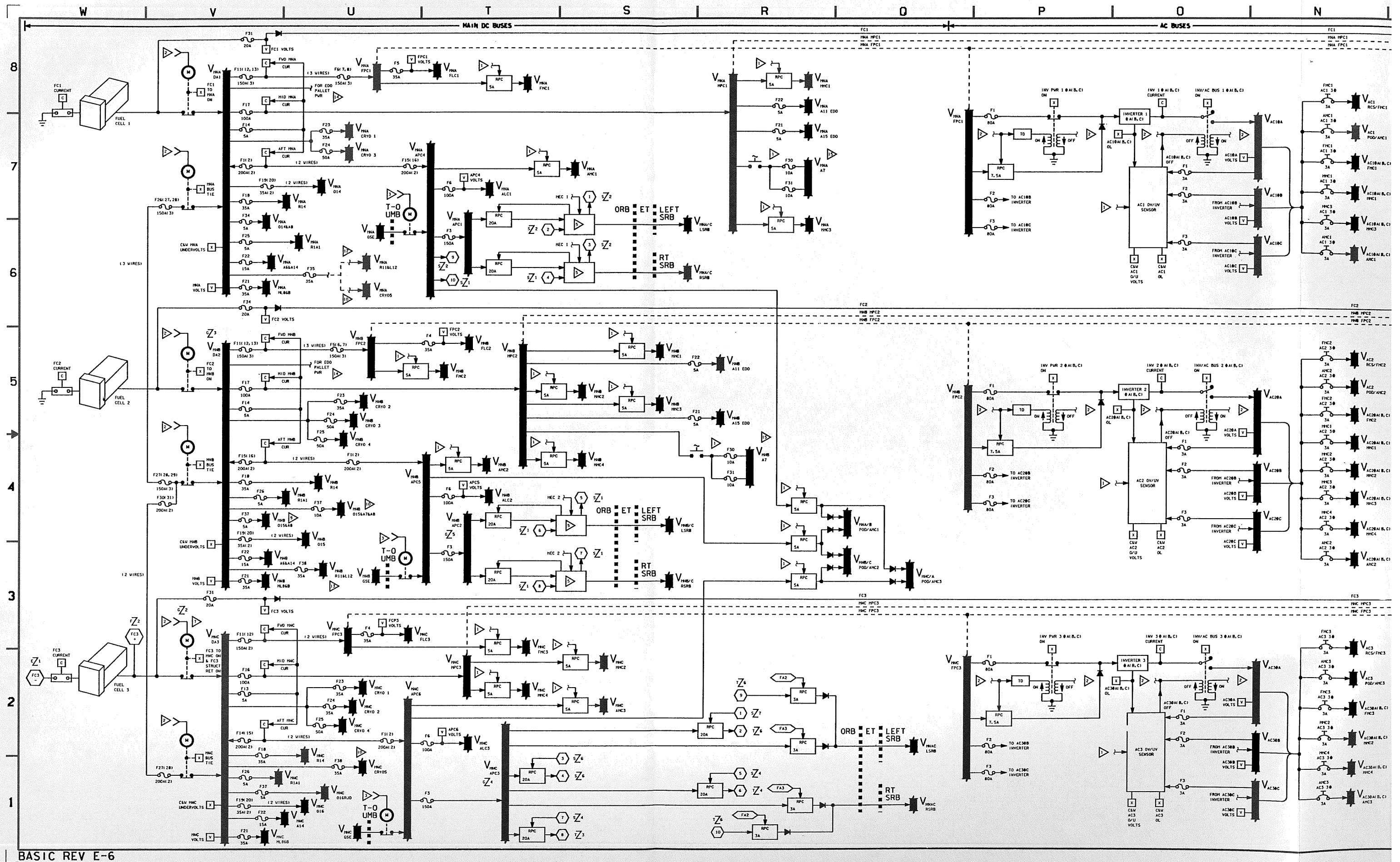

W
V
U
T
S
R
Q
P
O
N
8
7
6
5
4
3
2
1
MAIN DC BUSES
AC BUSES
FUEL CELL 1
FUEL CELL 2
FUEL CELL 3
T-0 UMB
ORB
ET
LEFT SRB
RT SRB
AC1 OV/UV SENSOR
AC2 OV/UV SENSOR
AC3 OV/UV SENSOR

BASIC REV E-6

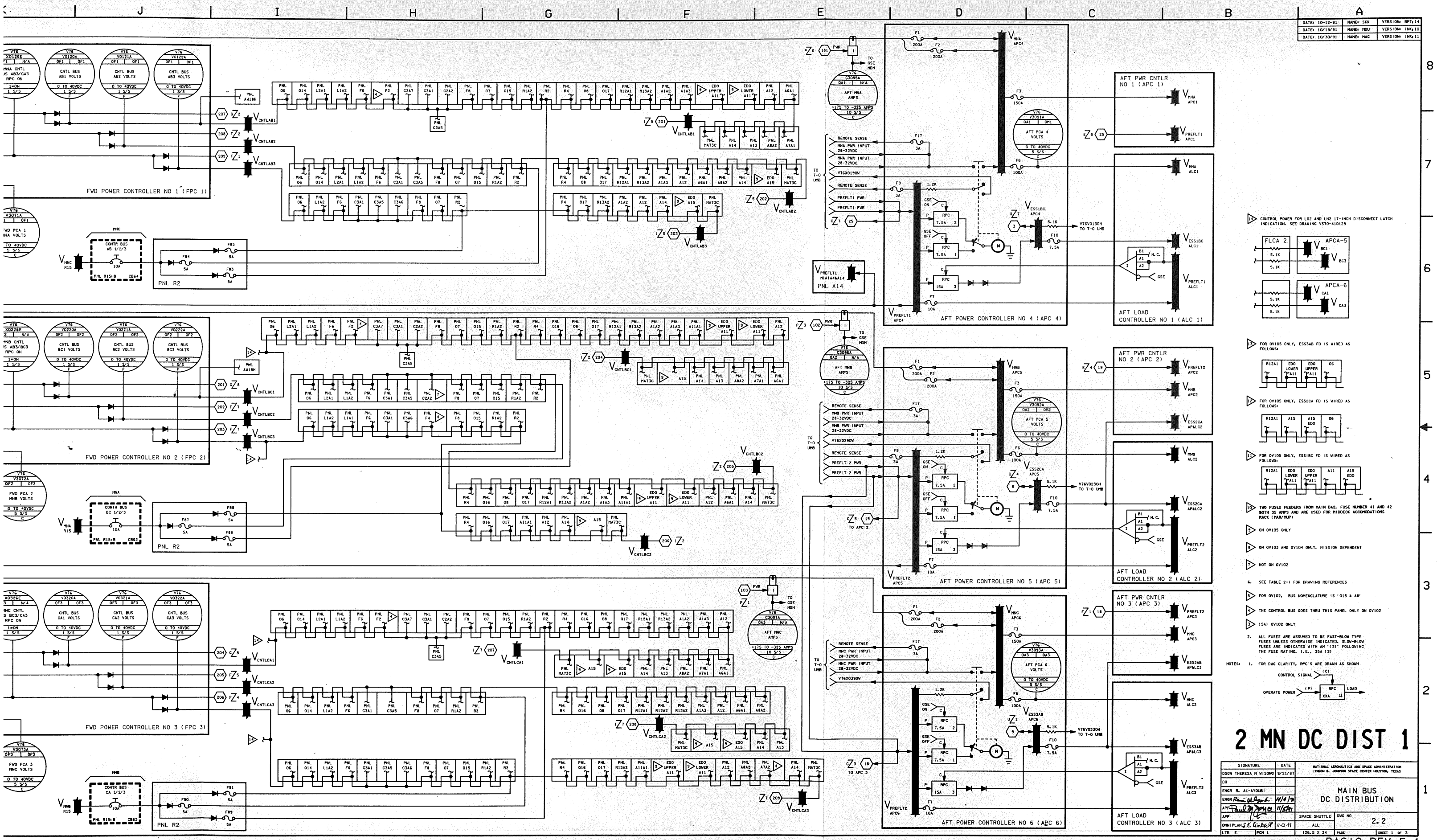

DATE: 10-12-91	NAME: SKK	VERSION: BPT;14
DATE: 10/19/91	NAME: MDU	VERSION: INK;10
DATE: 10/30/91	NAME: MAG	VERSION: INK;11

14 CONTROL POWER FOR LO2 AND LH2 17-INCH DISCONNECT LATCH INDICATION. SEE DRAWING VS70-410129

13 FOR OV105 ONLY, ESS3AB FD IS WIRED AS FOLLOWS:

12 FOR OV105 ONLY, ESS2CA FD IS WIRED AS FOLLOWS:

11 FOR OV105 ONLY, ESS1BC FD IS WIRED AS FOLLOWS:

10 TWO FUSED FEEDERS FROM MAIN DA2. FUSE NUMBER 41 AND 42 BOTH 35 AMPS AND ARE USED FOR MIDDECK ACCOMODATIONS RACK (MAR/MUP)

9 ON OV105 ONLY

8 ON OV103 AND OV104 ONLY, MISSION DEPENDENT

7 NOT ON OV102

6. SEE TABLE 2-1 FOR DRAWING REFERENCES

5 FOR OV102, BUS NOMENCLATURE IS '015 & A8'

4 THE CONTROL BUS GOES THRU THIS PANEL ONLY ON OV102

3 (5A) OV102 ONLY

2. ALL FUSES ARE ASSUMED TO BE FAST-BLOW TYPE FUSES UNLESS OTHERWISE INDICATED. SLOW-BLOW FUSES ARE INDICATED WITH AN '(S)' FOLLOWING THE FUSE RATING. I.E., 35A (S)

NOTES: 1. FOR DWG CLARITY, RPC'S ARE DRAWN AS SHOWN

2 MN DC DIST 1

SIGNATURE	DATE	NATIONAL AERONAUTICS AND SPACE ADMINISTRATION LYNDON B. JOHNSON SPACE CENTER HOUSTON, TEXAS
DSGN THERESA M WISONG	9/21/87	MAIN BUS DC DISTRIBUTION
DR		
ENGR R. AL-AYOUBI		
ENGR	11/4/91	
APP	11/5/91	
APP		SPACE SHUTTLE
OMNIPLAN S.K. Cintrell	11-12-91	ALL
LTR E	PCN 1	126.5 X 34

DWG NO 2.2

PAGE SHEET 1 OF 3

BASIC REV E-1

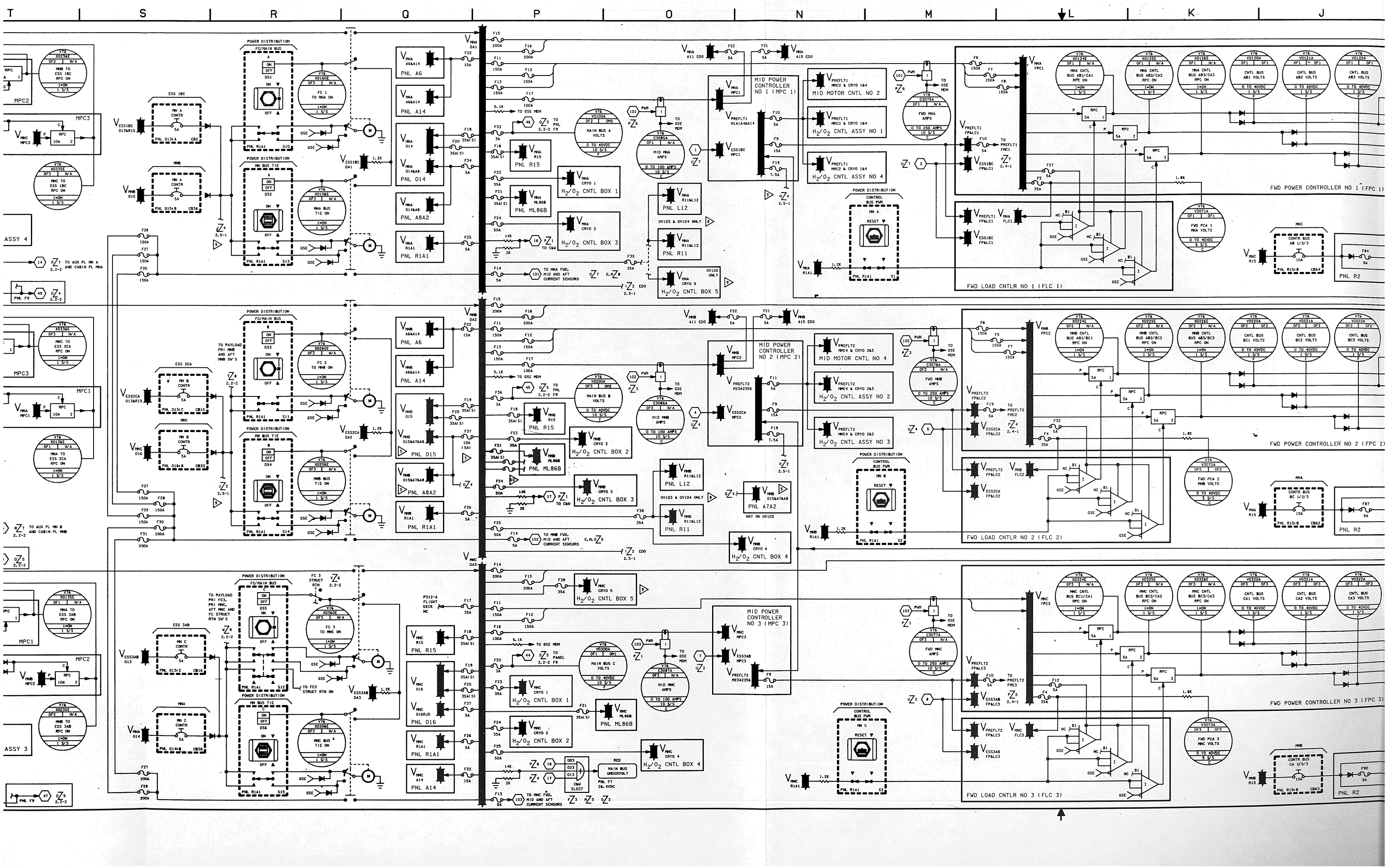

T
S
R
Q
P
O
N
M
L
K
J
MID POWER CONTROLLER NO 1 (MPC 1)
MID POWER CONTROLLER NO 2 (MPC 2)
MID POWER CONTROLLER NO 3 (MPC 3)
FWD POWER CONTROLLER NO 1 (FPC 1)
FWD POWER CONTROLLER NO 2 (FPC 2)
FWD POWER CONTROLLER NO 3 (FPC 3)
FWD LOAD CNTLR NO 1 (FLC 1)
FWD LOAD CNTLR NO 2 (FLC 2)
FWD LOAD CNTLR NO 3 (FLC 3)
MID MOTOR CNTL NO 2
MID MOTOR CNTL NO 4
H2/O2 CNTL ASSY NO 1
H2/O2 CNTL ASSY NO 2
H2/O2 CNTL ASSY NO 3
H2/O2 CNTL ASSY NO 4
H2/O2 CNTL BOX 1
H2/O2 CNTL BOX 2
H2/O2 CNTL BOX 3
H2/O2 CNTL BOX 4
H2/O2 CNTL BOX 5
PNL R15
PNL ML86B
PNL L12
PNL R11
PNL A6
PNL A14
PNL A8A2
PNL R1A1
PNL 014
PNL 015
PNL 016
PNL A7A2
PNL R2
MPC1
MPC2
MPC3
ASSY 3
ASSY 4
POWER DISTRIBUTION
MAIN BUS A VOLTS
MAIN BUS B VOLTS
MAIN BUS C VOLTS
MID MNA AMPS
MID MNB AMPS
MID MNC AMPS
FWD MNA AMPS
FWD MNB AMPS
FWD MNC AMPS
MAIN BUS UNDERVOLT
TO MNA FWD, MID AND AFT CURRENT SENSORS
TO MNB FWD, MID AND AFT CURRENT SENSORS
TO MNC FWD, MID AND AFT CURRENT SENSORS
TO AUX PL MN A AND CABIN PL MNA
TO AUX PL MN B AND CABIN PL MNB

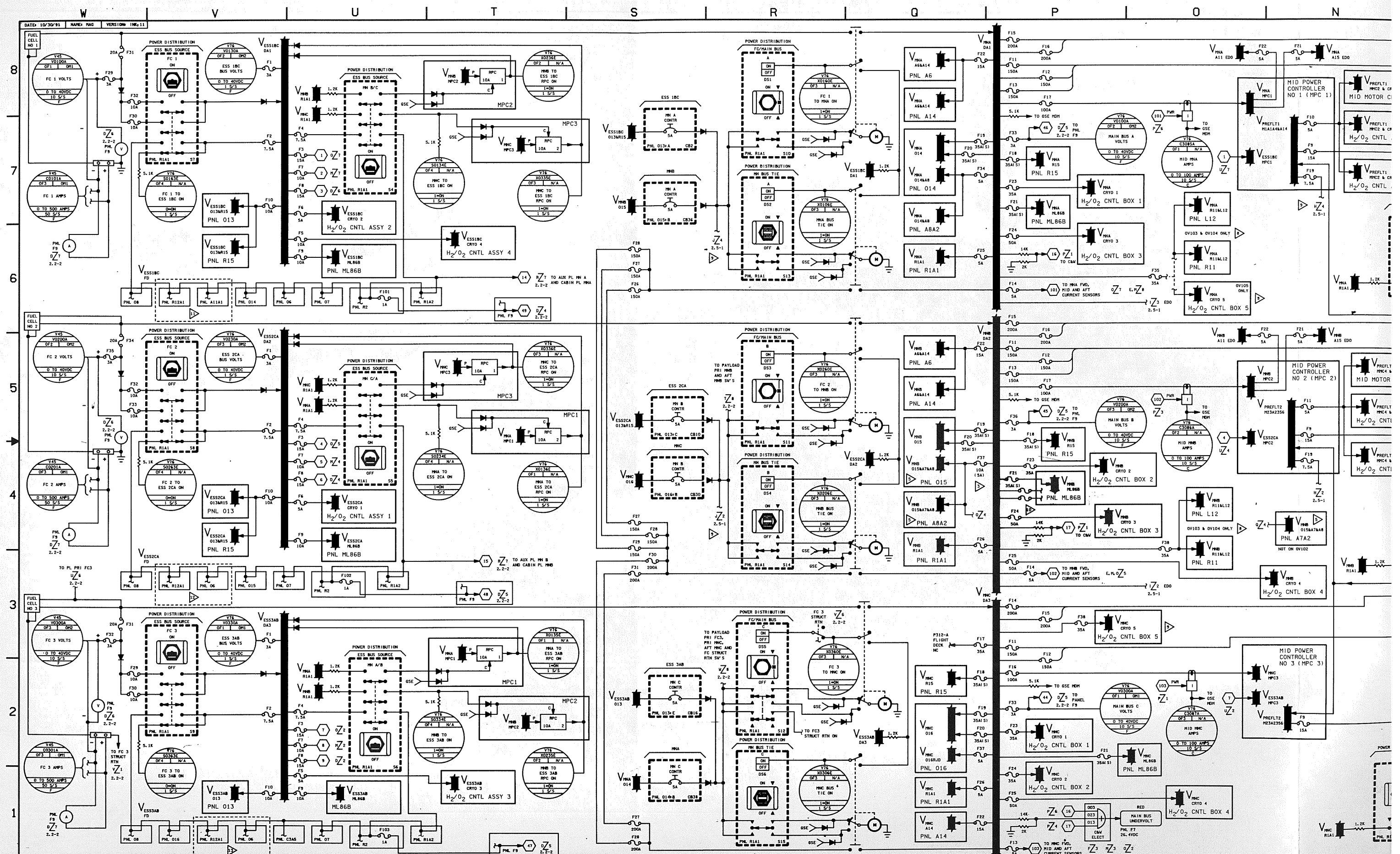
W
V
U
T
S
R
Q
P
O
N
8
7
6
5
4
3
2
1
DATE: 10/30/91
NAME: MAG
VERSION: INK;11
FUEL CELL NO 1
FUEL CELL NO 2
FUEL CELL NO 3
POWER DISTRIBUTION
ESS BUS SOURCE
FC/MAIN BUS
MN BUS TIE
MID POWER CONTROLLER NO 1 (MPC 1)
MID POWER CONTROLLER NO 2 (MPC 2)
MID POWER CONTROLLER NO 3 (MPC 3)
MPC1
MPC2
MPC3
PNL R15
PNL ML86B
PNL 013
PNL A6
PNL A14
PNL 014
PNL A8A2
PNL R1A1
PNL 015
PNL 016
PNL L12
PNL R11
PNL A7A2
H2/O2 CNTL ASSY 1
H2/O2 CNTL ASSY 2
H2/O2 CNTL ASSY 3
H2/O2 CNTL ASSY 4
H2/O2 CNTL BOX 1
H2/O2 CNTL BOX 2
H2/O2 CNTL BOX 3
H2/O2 CNTL BOX 4
H2/O2 CNTL BOX 5
MAIN BUS A VOLTS
MAIN BUS B VOLTS
MAIN BUS C VOLTS
MID MNA AMPS
MID MNB AMPS
MID MNC AMPS
MAIN BUS UNDERVOLT
TO AUX PL MN A AND CABIN PL MNA
TO AUX PL MN B AND CABIN PL MNB
TO PL PRI FC3
TO FC 3 STRUCT RTN
TO PAYLOAD PRI MNB AND AFT MNB SW'S
TO PAYLOAD PRI FC3, PRI MNC, AFT MNC AND FC STRUCT RTN SW'S
TO MNA FWD, MID AND AFT CURRENT SENSORS
TO MNC FWD, MID AND AFT CURRENT SENSORS
TO GSE MDM
TO PANEL
TO C&W
C&W ELECT
RED
MAIN BUS UNDERVOLT
PNL F7 26.4VDC
P312-A FLIGHT DECK NC
NOT ON OV102
OV103 & OV104 ONLY
OV105 ONLY

BASIC REV E-1

DATE: 9/18/90	NAME: VSH	VERSION: INK 2
DATE: 10-12-91	NAME: SKK	VERSION: BPT 5
DATE: 10/19/91	NAME: MDU	VERSION: INK 3

J I H G F E D C B A

8 7 6 5 4 3 2 1

STRIBUTION

X_D=1307 J498

X_D=1307 J499

ORB ET SRB

LSRB

RSRB

V76 X4395E OA1 N/A LSRB BUS C RPC A 1=ON 1 S/S

V76 X4393E OA3 N/A LSRB BUS C RPC C 1=ON 1 S/S

V76 X4394E OA3 N/A RSRB BUS C RPC C 1=ON 1 S/S

V76 X4394E OA1 N/A RSRB BUS C RPC A 1=ON 1 S/S

V76K6945X V MNC APC3 FA 3 C P RPC 3A 3

V76K6941X V MNA APC4 FA 4 C P RPC 3A 48

V76K6946X V MNC APC3 FA 3 C P RPC 3A 4

V76K6942X V MNA APC4 FA 4 C P RPC 3A 50

AFT LOAD CONTROLLER NO 3 (ALC 3)

V MNC ALC 3 E+ S- S+ I

LSRB BUS A/C MNC PWR ENABLE V76K7011B MEC 1

V ES53AB AP&ALC 3 A1 A2 T1 T2 II N.S.

LSRB BUS A/C MNC PWR INH V76K6755N LA-1

7.5K

AFT LOAD CONTROLLER NO 1 (ALC 1)

LSRB BUS A/C MNA PWR ON V76K7002B MEC 1

V MNA ALC 1 B1 N.C. I

AFT POWER CONTROLLER NO 3 (APC 3)

V MNC APC 3 C P RPC 20A 27

AFT POWER CONTROLLER NO 1 (APC 1)

V MNA APC 1 C P RPC 20A 3

V76 X6775E OA1 N/A LSRB BUS A/C BU PWR ON 1=MNC ON 1 S/S

15K

V MNA/C LSRB

B76 V16600C LL1 N/A LSRB BUS A/C VOLTS 0 TO 40 VDC 10 S/S

5.1K TO GSE

AFT LOAD CONTROLLER NO 2 (ALC 2)

LSRB BUS B/C MNB PWR ON V76K7102B MEC 2

V MNB ALC 2 B1 N.C. I

AFT POWER CONTROLLER NO 3 (APC 3)

V MNC APC 3 C P RPC 20A 26

AFT POWER CONTROLLER NO 2 (APC 2)

V MNB APC 2 C P RPC 20A 5

V76 X6777E OA2 N/A LSRB BUS B/C BU PWR ON 1=MNC ON 1 S/S

15K

V MNB/C LSRB

B76 V16601C LL1 N/A LSRB BUS B/C VOLTS 0 TO 40 VDC 10 S/S

5.1K TO GSE

AFT LOAD CONTROLLER NO 3 (ALC 3)

V MNC ALC 3 E+ S- S+ I

RSRB BUS A/C MNC PWR ENABLE V76K7012B MEC 1

V ES53AB AP&ALC 3 A1 A2 T1 T2 II N.S.

RSRB BUS A/C MNC PWR INH V76K6756N LA-1

7.5K

AFT LOAD CONTROLLER NO 1 (ALC 1)

RSRB BUS A/C MNA PWR ON V76K7003B MEC 1

V MNA ALC 1 B1 N.C. I

AFT POWER CONTROLLER NO 3 (APC 3)

V MNC APC 3 C P RPC 20A 25

AFT POWER CONTROLLER NO. 1 (APC 1)

V MNA APC 1 C P RPC 20A 4

V76 X6776E OA1 N/A RSRB BUS A/C BU PWR ON 1=MNC ON 1 S/S

15K

V MNA/C RSRB

B76 V26600C LR1 N/A RSRB BUS A/C VOLTS 0 TO 40 VDC 10 S/S

5.1K TO GSE

AFT LOAD CONTROLLER NO 2 (ALC 2)

RSRB BUS B/C MNB PWR ON V76K7103B MEC 2

V MNB ALC 2 B1 N.C. I

AFT POWER CONTROLLER NO 3 (APC 3)

V MNC APC 3 C P RPC 20A 24

AFT POWER CONTROLLER NO. 2 (APC 2)

V MNB APC 2 C P RPC 20A 4

V76 X6778E OA2 N/A RSRB BUS B/C BU PWR ON 1=MNC ON 1 S/S

15K

V MNB/C RSRB

B76 V26601C LR1 N/A RSRB BUS B/C VOLTS 0 TO 40 VDC 10 S/S

5.1K TO GSE

PNL F9 METER

FC 3 AMPS
FC 2 AMPS
FC 1 AMPS
SIGNAL STRENGTH INPUTS
FC 3 RTN
FC 2 RTN
FC 1 RTN
SIGNAL STRENGTH RTN

0 DC AMPS SIG STR 100 200 300 400 500 90 350

SIGNAL STRENGTH MAIN VOLTS A B C ESS VOLTS 3AB 2CA 1BC FUEL CELL 1 2 3 VOLTS/AMP (S2)

FC 3 VOLTS
FC 2 VOLTS
FC 1 VOLTS
MN C VOLTS
MN B VOLTS
MN A VOLTS
ESS 3AB VOLTS
ESS 2CA VOLTS
ESS 1BC VOLTS

DC VOLTS 20 25 30 35 40 45 26.4 28 32

MAIN DISTRIBUTION ASSY NO. 3
MAIN DISTRIBUTION ASSY NO. 2
MAIN DISTRIBUTION ASSY NO. 1

RPC FUNCTIONAL DIAGRAM

POWER IN
CURRENT SHUNT
POWER TO ALL COMPONENTS
POWER ON PULSE GENERATOR
SET PULSE
OVER CURRENT DETECTOR
>150% RATED LOAD
LOAD POWER OUT
CNTL INPUT
4K
THRESHOLD DETECTOR
>10.5±1.5VDC OR 6±1VDC
S Q FF R Q
DRIVE AMPL
>0.35VDC TURN ON
DELTA VOLTS DETECTOR
TD 2-3 SEC
GND
OPERATE POWER
CONTROL SIGNAL
C P RPC XXA m LOAD

TYPE I DRIVER FUNCTIONAL SCHEMATIC

POWER
3A
E+
REFERENCE VOLTAGE GENERATOR
OUTPUT
S-
S+
GROUND

TYPE II DRIVER LOGIC INPUT TRUTH TABLE

A1	A2	N	T1	T2	SWITCH STATE
1	1	0	GND	X	ON (40 ms DELAY)
1	1	0	OPEN	GND	ON (1 sec DELAY)
1	1	0	OPEN	OPEN	ON (4 sec DELAY)
0	X	X	X	X	OFF
X	0	X	X	X	OFF
X	X	1	X	X	OFF

13. WIRE CUT AND CAPPED ON ALL VEHICLES
12. RESERVED
11. GREEN= RED=
10. THE OPEN FUNCTION OF THIS SWITCH HAS BEEN DISABLED. (MCR-11945)
9. SEE TABLE 2-I FOR DRAWING REFERENCES
8. A SRB POWER SOURCE TRANSFER TO MNC OCCURS AT (22.0 VDC FOR 40 MILLISECONDS
7. PWR FROM VMNC APC6 VIA RPC POWERING OA2 AND OA3 DSC'S. SEE DRAWING 17.1 ZONE N2
6. PWR FROM VMNB APC5 VIA RPC POWERING OA1 AND OA2 MDM'S. SEE DRAWING 17.1 ZONE M6
5. THE SRB BUSES ARE ACTIVATED DURING PRE-LAUNCH BY LPS COMMANDS TO THE GND MDM'S, TO THE GPC'S TO THE MEC'S TO THE RPC'S. (THE MEC LATCHES THE CONTROL SIGNALS ON UNTIL POWER IS REMOVED FROM THE MEC)
4. ALL FUSES ARE OF THE FAST-BLOW TYPE UNLESS INDICATED BY AN *(S)* FOLLOWING THE FUSE RATING, E.G. 3A(S)
3. OUTPUT POWER TRANSISTOR REPRESENT SEVERAL TRANSISTORS IN PARALLEL (ONE FOR EACH AMP OF RPC RATING)
2. CONTROL SIGNAL INPUT (6±1 VDC OR APPLICATION OF LINE VOLTAGE SETS FLIP-FLOP

NOTES: 1. TIME DELAY IS RESET AT A 10 TO 1 RATIO (ie AFTER TRIP-OFF, OVERCURRENT SIGNAL MUST REMAIN OFF 20 SEC FOR A TD RESET TO 2 SEC)

2 DC 2

SIGNATURE		DATE
DSGN	K. CHARLSON	3/20/79
DR	MELVIN JAMES	3/21/79
ENGR	R. AL-AYOUBI	
ENGR		10/22/91
APP		10/29/91
APP		
OMNIPLAN	S.K. Rowland	11-1-91

NATIONAL AERONAUTICS AND SPACE ADMINISTRATION LYNDON B. JOHNSON SPACE CENTER HOUSTON, TEXAS

MAIN BUS DC DISTRIBUTION

SPACE SHUTTLE | DWG NO 2.2

ALL

LTR E | PCN 1 | 121 X 34 | PAGE | SHEET 2 OF 3

BASIC REV E-1

PAYLOAD POWER DISTRIBUTION

T | S | R | Q | P | O | N | M | L | K | J

AFT POWER CONTROLLER NO 3 (APC3)

MID POWER CONTROLLER NO 2 (MPC2)

MID POWER CONTROLLER NO 1 (MPC1)

AFT POWER CONTROLLER NO 2 (APC2)

POWER DISTRIBUTION

PAYLOAD

PAYLOAD STATION

MISSION STATION

ORBIT STATION

PL AFT MNC AMPS

PL AFT MNC PWR ON

PL AFT PWB AMPS

PL AFT PWB PWR ON

PL AUX MA B RPC ON

PL AUX PWB ON

PL CABIN PWA ON

PL CABIN PWB ON

PL PRI MNC ON

PL PRI PWB ON

PL PRI FC3 STMU GND

PL PRI FC3 ON

MNC MAIN

MNC APC3

MNC APC4

MNC ALC 3

MNC ALC 4

PWB APC2

PWA APC4

PWA MPC1

PWB MPC2

PWB

PWA

MNC

RSNB BUS A/C MNC PWR INH

LSNB BUS A/C MNC PWR INH

PAYLOAD AFT MNC

PAYLOAD AFT PWB

PAYLOAD AFT PWA

PAYLOAD AFT MA B

PAYLOAD CABIN

PAYLOAD PRI

PAYLOAD PRI FC3

PAYLOAD PRI PWB

PAYLOAD PRI PWA

PAYLOAD PRI PWC

PAYLOAD PRI FC3

PAYLOAD AUX

PAYLOAD 1/F

FC 3 STRUCT MIN

FC3 MAIN BUS

28V PAYLOAD MAIN PWR KILL SIGNAL FROM SPACELAB

TO FC/MNC BUS TIE SW'S

TO FC/PWB BUS TIE SW'S

AFT PWR DIST

MID PWR DIST

FWD PWR DIST

AFT PWR CONT

MID PWR CONT

FWD PWR CONT

AFT PWR CONT NO 3

AFT PWR CONT NO 2

MID PWR CONT NO 2

MID PWR CONT NO 1

FWD PWR CONT NO 2

FWD PWR CONT NO 1

AFT PWR CONT NO 1

FWD PWR DIST

AFT PWR DIST

MID PWR DIST

PAYLOAD PWR DIST

PAYLOAD PWR CONT

PAYLOAD MID PWR CONT

PAYLOAD FWD PWR CONT

PAYLOAD AFT PWR CONT

PAYLOAD MID PWR DIST

PAYLOAD FWD PWR DIST

PAYLOAD AFT PWR DIST

PAYLOAD PWR CONT

PAYLOAD MID PWR CONT

PAYLOAD FWD PWR CONT

PAYLOAD AFT PWR CONT

PAYLOAD MID PWR DIST

PAYLOAD FWD PWR DIST

PAYLOAD AFT PWR DIST

PAYLOAD PWR DIST

PAYLOAD MID PWR CONT

PAYLOAD FWD PWR CONT

PAYLOAD AFT PWR CONT

PAYLOAD MID PWR DIST

PAYLOAD FWD PWR DIST

PAYLOAD AFT PWR DIST

PAYLOAD PWR CONT

BASIC REV E-1

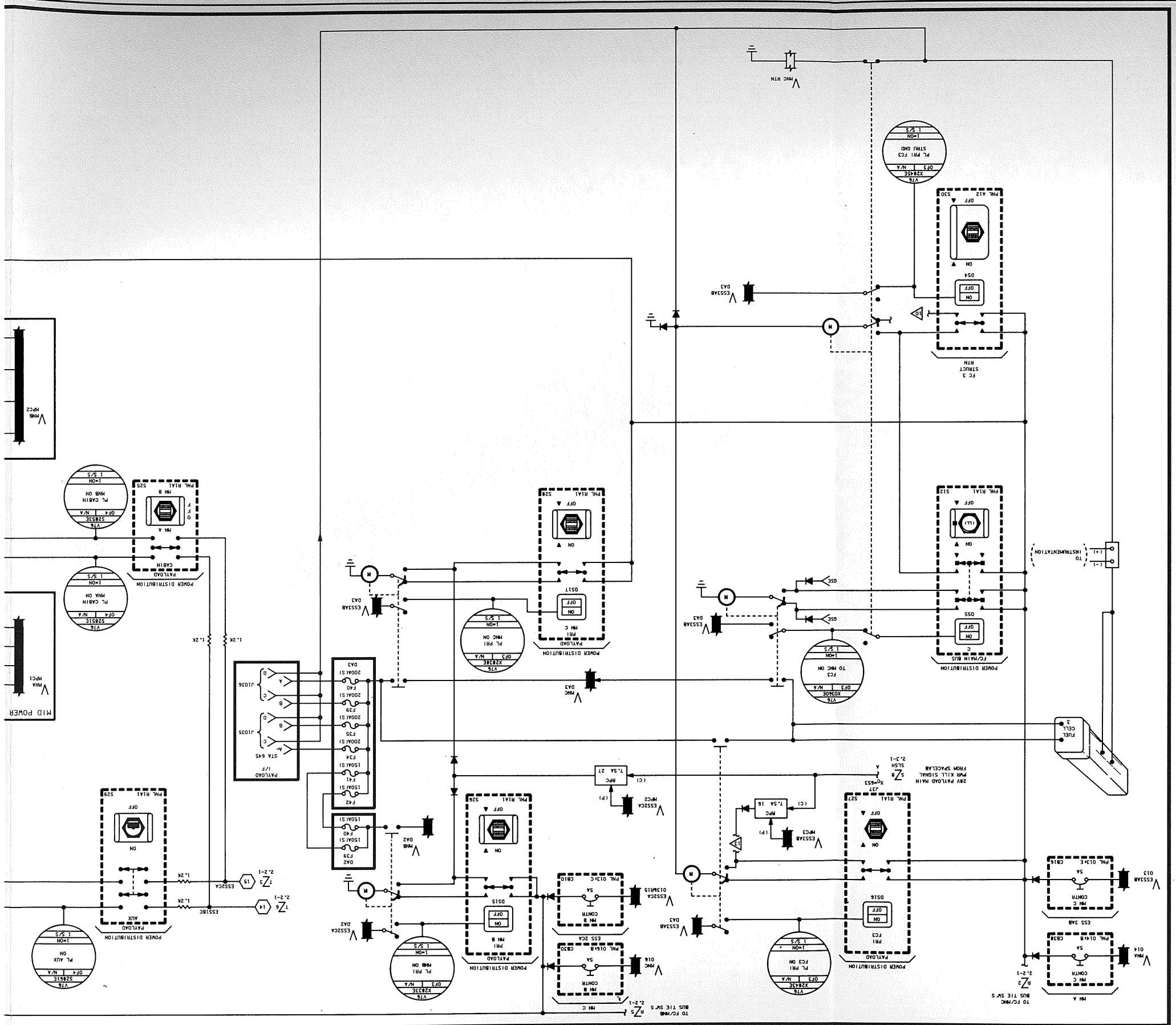
PAYLOAD
POWER DISTRIBUTION
PAYLOAD MAIN BUS
PAYLOAD CABIN
PAYLOAD AUX
PAYLOAD I/F
MID POWER
PL CABIN MAB ON
PL CABIN MAA ON
PL AUX ON
PL PR1 MAB ON
PL PR1 MAA ON
PL PR1 FC3 ON
PL PR1 FC3 STMU GND
PL PR1 MAC ON
PL PR1 FC3 TO MAC ON
PL CONTR
PL DISCH
PL R1A1
PL R1A2
PL R1A3
PL R1A4
PL A12
PL PR1
PL CONTR
PL DISCH
PWR A
PWR B
PWR C
FC 3 START MTN
FC/MAIN BUS
INSTRUMENTATION
FUEL CELL 3
2AY PAYLOAD MAIN PWR KILL SIGNAL FROM SPACELAB
TO FC/MAC BUS TIE SW'S
TO FC/PWR BUS TIE SW'S
MAC MTN
PWR MTN
MAC
PWR
STA 645
J1035
J1036
DA1
DA2
DA3
DS4
DS15
DS16
DS17
DS5
DS6
C30
C810
C816
C818
F39
F40
F41
F42
F43
F44
F45
F46
F47
F48
150AT(S)
200AT(S)
7.5A 27
7.5A 18
1.2K
1.5K
ON
OFF
MAN
AUTO
V16 S28536
V16 S28516
V16 X28436
V16 X28435
V16 X28434
V16 X28433
V16 X28432
V16 X28431
V16 X28430
V16 X28429
V16 X28428
V16 X28427
V16 X28426
V16 X03606
V16 X03605
V16 X03604
V16 X03603
V16 X03602
V16 X03601
V16 X03600
V16 X03599
V16 X03598
V16 X03597
V16 X03596
V16 X03595
V16 X03594
V16 X03593
V16 X03592
V16 X03591
V16 X03590
V16 X03589
V16 X03588
V16 X03587
V16

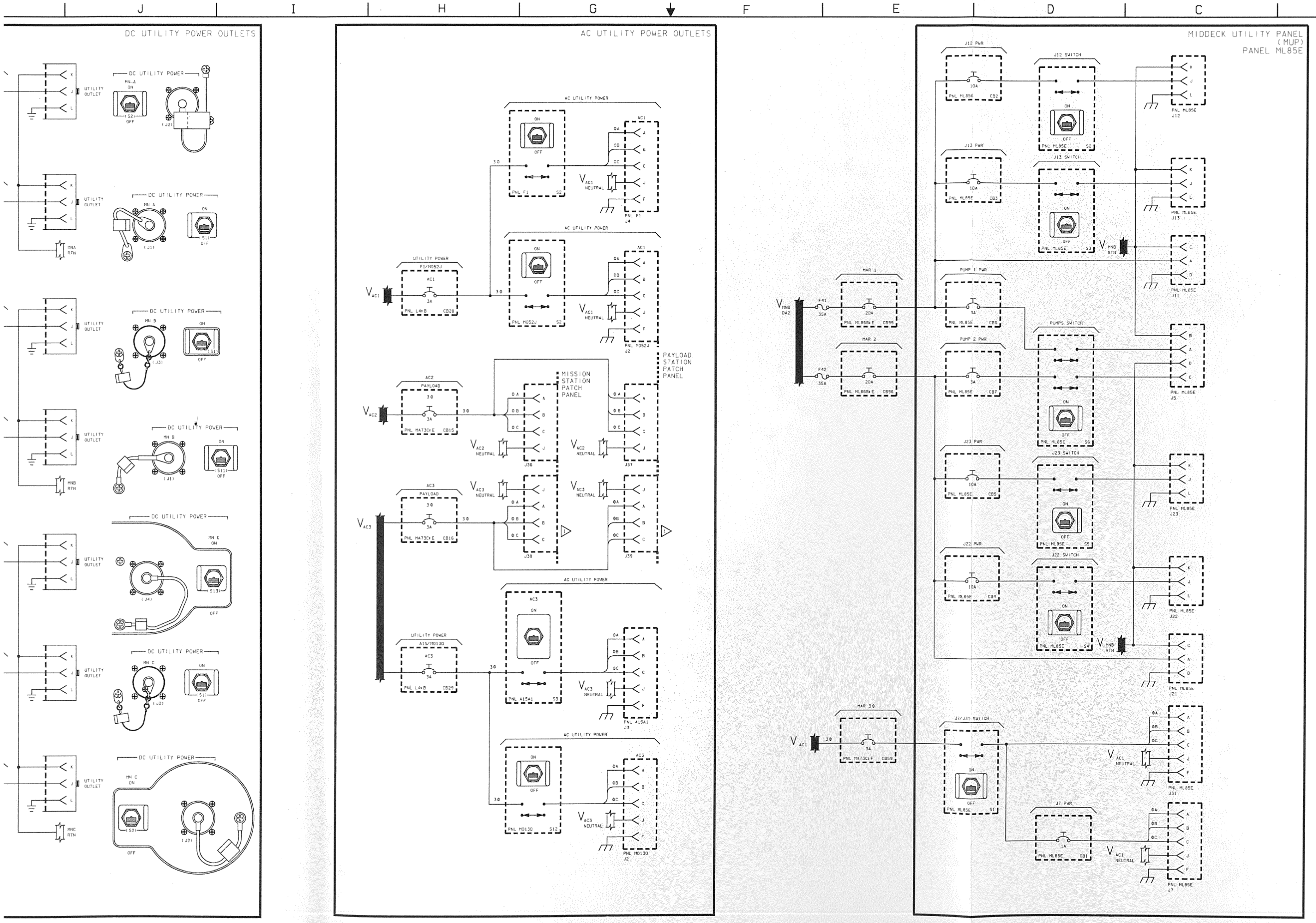

DATE: 11/04/91	NAME: MDU	VERSION: INK, 1
DATE: 11/23/92	NAME: MDU	VERSION: BPT, 3
DATE: 12/10/92	NAME: MDU	VERSION: INK, 2

2. SEE TABLE 2-1 FOR VENDOR DRAWING REFERENCES

NOTES: 1 MISSION AND PAYLOAD STATION CONNECTIONS J38 AND J39 ARE KEYED DIFFERENT AND CANNOT BE USED WITH THE AC POWER TRANSFER CABLE

2 AC/DC UTIL 3

SIGNATURE	DATE	NATIONAL AERONAUTICS AND SPACE ADMINISTRATION LYNDON B. JOHNSON SPACE CENTER HOUSTON, TEXAS
DSGN S. K. KIMBRELL	10-12-91	
DR		AC/DC UTILITY OUTLETS
ENGR R. AL-AYOUBI		
ENGR Rami Al-Ayoubi	12/17/92	
APP Paul M. Jay	12/17/92	
APP		SPACE SHUTTLE: ALL — DWG NO 2.2
OMNIPLAN S. K. Kimbrell	12-21-92	
LTR E — PCN 2		66 X 34 — PAGE — SHEET 3 OF 3

BASIC REV E-2

DC UTILITY POWER OUTLETS

AC UTILITY POWER OUTLETS

DATE: 10/02/90	NAME: JDF	VERSION: INK: 7
DATE: 10-12-91	NAME: SKK	VERSION: BPT: 11
DATE: 10/15/91	NAME: MDU	VERSION: INK: 8

INVERTER DISTRIBUTION AND CONTROL ASSY 3 (IDCA3)

INVERTER DISTRIBUTION AND CONTROL ASSY 2 (IDCA2)

INVERTER DISTRIBUTION AND CONTROL ASSY 1 (IDCA1)

AC1 (2,3) BUS VOLTAGE SENSOR

AC1 ΦA VOLTS

AC1 ΦB VOLTS

AC1 ΦC VOLTS

AC1 ΦA AMPS

0 TO 20 AMPS

AC1 ΦA BUS ON

AC1 ΦB BUS ON

AC1 ΦC BUS ON

AC1 Φ/V-U/V

AC1 OVERLOAD

AC PHASE VOLTAGE <102 TO 108 VOLTS FOR 6.5 TO 8.5 SECS OR >123 TO 127 VOLTS FOR 50 TO 90 MS

AC PHASE INVERTER CURRENT >14.5 AMPS FOR 10 TO 20 SECS OR >17.3 TO 21.1 AMPS FOR 4 TO 6 SECONDS

AC1 NEUTRAL

AC2 NEUTRAL

AC3 NEUTRAL

PHASE A SENSOR

PHASE B SENSOR

PHASE C SENSOR

C&W ELECTRONICS

BACKUP C/W ALARM

PNL FTA2

THE FOLLOWING BACKUP C/W ALARM PARAMETERS ARE MONITORED IN BFS AND/OR SM OPS 2 SOFTWARE. 'M' COUNT IS 2 ON ALL PARAMETERS

PARAMETER	LIMIT LOW	LIMIT HIGH	LIMIT UNITS	GPC S/S	CRT MESSAGE
V76V1500A	108	123	VAC	1	S67 (SM1) AC VOLTS 1
V76V1501A	108	123	VAC	1	
V76V1502A	108	123	VAC	1	
V76X1506E	OVLD		EVENT	1	S67 (SM1) AC OVLD 1
V76V1600A	108	123	VAC	1	
V76V1601A	108	123	VAC	1	S67 (SM1) AC VOLTS 2
V76V1602A	108	123	VAC	1	
V76X1606E	OVLD		EVENT	1	S67 (SM1) AC OVLD 2
V76V1700A	108	123	VAC	1	
V76V1701A	108	123	VAC	1	S67 (SM1) AC VOLTS 3
V76V1702A	108	123	VAC	1	
V76X1706E	OVLD		EVENT	1	S67 (SM1) AC OVLD 3

INVERTER OVERLOAD CURRENT VALUES CORRESPOND TO INVERTER TRANSFORMER T1 OUTPUT. THE 10 μFD CAPACITOR BETWEEN TRANSFORMER T1 AND THE BUS CURRENT SENSORS WILL CAUSE THE INVERTER CURRENT TO DIFFER FROM AC BUS CURRENT AS A FUNCTION OF LOAD POWER FACTOR (PF). BUS LOAD POWER FACTOR IS NOT MEASURED BUT WILL NORMALLY BE 0.6 TO 0.8 LAGGING (-)

I (BUS AMPS) = 2.95 $\sqrt{1-(PF)^2}$ + $\sqrt{(I\ INV\ CUR)^2 - 8.7(PF)^2}$

INV CUR PCT RATED	INV CUR AMPS	BUS AMPS AT BUS PF -.6	-.7	-.8	-.9	-.95	1.0
100	6.4	8.5	8.2	7.7	7.1	6.7	5.7
150	9.6	11.8	11.5	11.1	10.5	10.1	9.1
200	12.8	15.0	14.7	14.4	13.8	13.4	12.5
225	14.5	16.8	16.5	16.1	15.5	15.1	14.2
300	19.2	21.5	21.2	20.8	20.3	19.9	19.0

THE MTU REFERENCE SIGNAL HAS BEEN DISCONNECTED TO PREVENT MTU FAILURE MODES FROM CAUSING ALL NINE AC PHASE INVERTERS TO LOSE PHASE AND FREQUENCY SYNCHRONIZATION

6. EACH COLDPLATE COOLED AC PHASE INVERTER IS THERMALLY LIMITED TO LOADS OF:
   A. 6.4 AMPS (100 PCT) CONTINUOUSLY
   B. 8.3 AMPS (130 PCT) FOR 8 HOURS
   C. 9.6 AMPS (150 PCT) FOR 30 MINUTES
   D. 12.8 AMPS (200 PCT) FOR 2 MINUTES

5. EACH AC PHASE INVERTER IS RATED AT:
   VOLTAGE - 117±3, -1 VOLTS RMS
   VOLT AMPS - 750 FOR PF FROM 0.7 LAG TO 0.9 LEAD
   FREQUENCY - 400 ± 2 HZ (WITH MTU SYNC)
   400 ± 7 HZ (WITHOUT MTU SYNC)
   WAVE SHAPE - SINE

4. AC PHASE CURRENT AND VOLTAGE MEASUREMENTS ARE ALSO AVAILABLE PRELAUNCH AT THE LH T-0 UMBILICAL.

EACH AC PHASE OUTPUT VOLTAGE IS CONTROLLED BY A REFERENCE SINE WAVE SIGNAL WHOSE ZERO VOLTAGE CROSSOVER POINT IS PHASE SYNCHRONIZED IN EACH THREE PHASE INVERTER ARRAY TO 120 ± 1.5 DEG. PHASE ROTATION IS A, B, C MAXIMUM CURRENT LIMITING CLIPS THE REFERENCE VOLTAGE PEAKS

EACH AC BUS CAN BE ISOLATED (UNLOADED) BY OPENING THE APPROPRIATE AC BUS CIRCUIT BREAKERS ON PANELS MA73C AND L4

12. SEE TABLE 2-1 FOR VENDOR DRAWING REFERENCES

SYNC WIRES EXTERNAL TO INVERTER BOX. FOR CONTINGENCIES, SYNC WIRES CAN BE INTERCHANGED WITHOUT INVERTER BOX REMOVAL

FUSE REPLACEMENT REQUIRES INTERNAL LRU ACCESS

NOTES: 1. AC 1 SYSTEM SHOWN. AC 2 AND AC 3 SYSTEMS OPERATE THE SAME EXCEPT AS SHOWN

3 AC

SIGNATURE	DATE	
DSGN VICKI S. DOGGETT	5/23/79	NATIONAL AERONAUTICS AND SPACE ADMINISTRATION LYNDON B. JOHNSON SPACE CENTER HOUSTON, TEXAS
DR		
ENGR J. AZBELL		AC GENERATION AND DISTRIBUTION
ENGR J. Azbell	10/28/91	
APP	10/29/91	
APP		SPACE SHUTTLE
OMNIPLAN S.K. Kinard	11-1-91	ALL
LTR E PCN 1		126.5 X 34

DWG NO 2.3

SHEET 1 OF 1

BASIC REV E-1

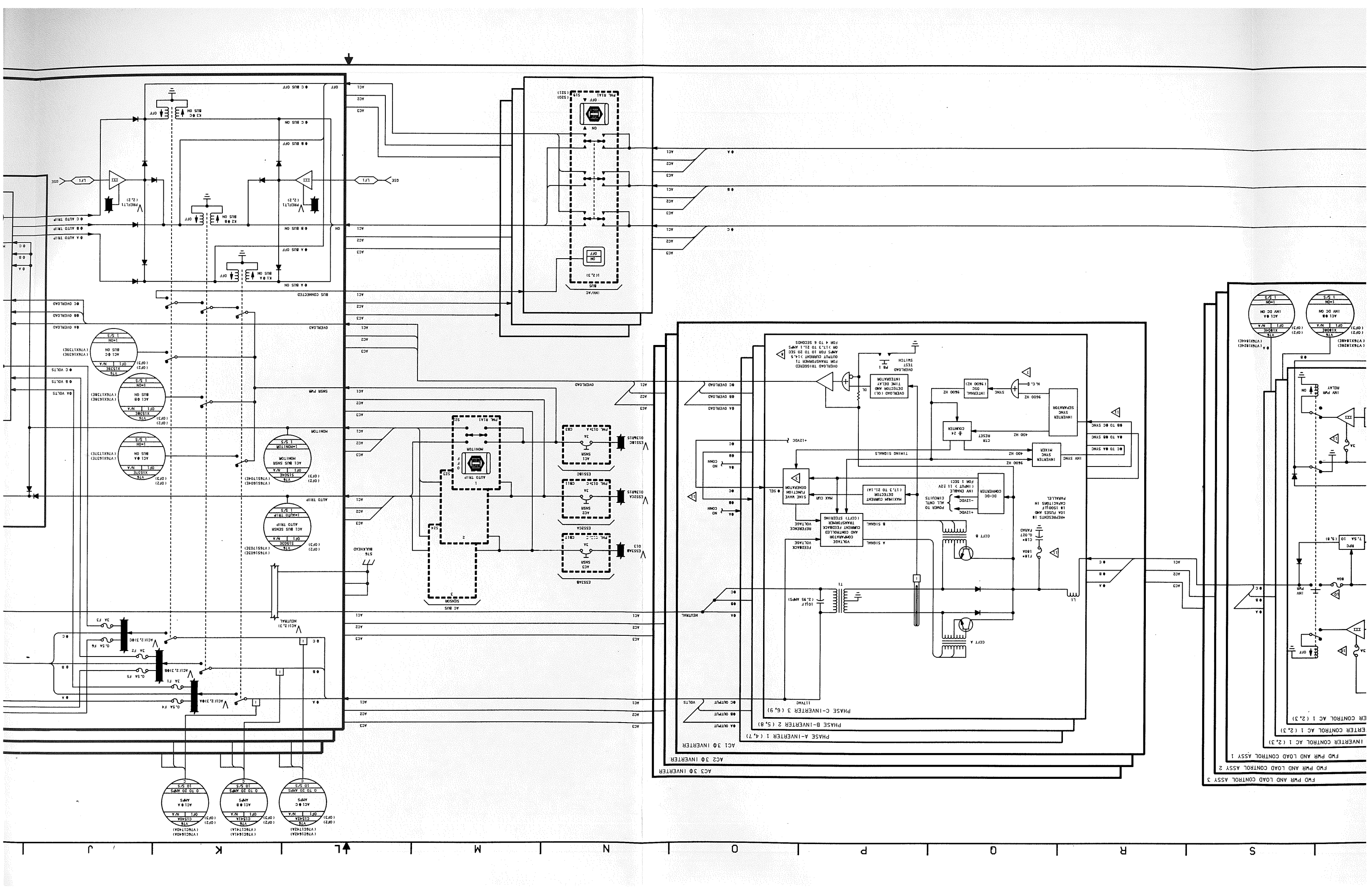
ACT 3Φ INVERTER
AC2 3Φ INVERTER
AC3 3Φ INVERTER
PHASE A-INVERTER 1 (4,7)
PHASE B-INVERTER 2 (5,8)
PHASE C-INVERTER 3 (6,9)
FWD PWR AND LOAD CONTROL ASSY 1
FWD PWR AND LOAD CONTROL ASSY 2
FWD PWR AND LOAD CONTROL ASSY 3
INVERTER CONTROL AC 1 (2,3)
OVERLOAD
BUS CONNECTED
SNSR PWR
MONITOR
AUTO TRIP
NEUTRAL
INV/AC BUS
INV PWR RELAY ON
INV DC ON
SINE WAVE GENERATION
VOLTAGE AND CURRENT FEEDBACK CONTROLLED TRANSFORMER (CCFT) STEERING
DC-DC CONVERTER
INTERNAL OSC
INVERTER SYNC SEPARATOR
INVERTER SYNC MIXER
OVERLOAD DETECTION AND INTEGRATION TIME DELAY
OVERLOAD TEST SWITCH
OVERLOAD TRIGGERED FROM TRANSFORMER T1 OUTPUT CURRENT 3 1+.5 AMPS FOR 10 TO 20 SEC OR >17.3 TO 21.1 AMPS FOR 4 TO 6 SECONDS
MAXIMUM CURRENT DETECTION
POWER TO ALL CKT CIRCUITS
9600 HZ
400 HZ
115VAC
10 AMPS
0 TO 20 AMPS
0 TO 10 SYNC
0 TO 0C SYNC
0A TO 0B SYNC
0C TO 0A SYNC
0A OUTPUT
0B OUTPUT
0C OUTPUT
VOLTS
0A VOLTS
0B VOLTS
0C VOLTS
0A OVERLOAD
0B OVERLOAD
0C OVERLOAD
0A AUTO TRIP
0B AUTO TRIP
0C AUTO TRIP
0A BUS ON
0B BUS ON
0C BUS ON
0A BUS OFF
0B BUS OFF
0C BUS OFF
ACT (2,3)0A
ACT (2,3)0B
ACT (2,3)0C
ACT 0A AMPS
ACT 0B AMPS
ACT 0C AMPS
ACT 0A SNSR MONITOR
ACT BUS SENSR AUTO TRIP
ACT 0A BUS ON
ACT 0B BUS ON
ACT 0C BUS ON
ACT 0A INV DC ON
ACT 0B INV DC ON
INV PWR RELAY ON
INV DC ON
INV SYNC
INTERNAL OSC
CTR RESET
÷24 COUNTER
+12VDC
-12VDC
+15VDC
-15VDC
+12VDC (INPUT 11 22V FOR 1 SEC)
-12VDC (INPUT 11 22V FOR 1 SEC)
#REPRESENTS 18 10A FUSES AND 18 .1500UF CAPACITORS IN PARALLEL
CCFT A
CCFT B
T1
L1
CR1
CR2
CR3
CR4
CR5
CR6
CR7
CR8
CR9
CR10
CR11
CR12
CR13
CR14
CR15
CR16
CR17
CR18
CR19
CR20
CR21
CR22
CR23
CR24
CR25
CR26
CR27
CR28
CR29
CR30
CR31
CR32
CR33
CR34
CR35
CR36
CR37
CR38
CR39
CR40
CR41
CR42
CR43
CR44
CR45
CR46
CR47
CR48
CR49
CR50
CR51
CR52
CR53
CR54
CR55
CR56
CR57
CR58
CR59
CR60
CR61
CR62
CR63
CR64
CR65
CR66
CR67
CR68
CR69
CR70
CR71
CR72
CR73
CR74
CR75
CR76
CR77
CR78
CR79
CR80
CR81
CR82
CR83
CR84
CR85
CR86
CR87
CR88
CR89
CR90
CR91
CR92
CR93
CR94
CR95
CR96
CR97
CR98
CR99
CR100
CR101
CR102
CR103
CR104
CR105
CR106
CR107
CR108
CR109
CR110
CR111
CR112
CR113
CR114
CR115
CR116
CR117
CR118
CR119
CR120
CR121
CR122
CR123
CR124
CR125
CR126
CR127
CR128
CR129
CR130
CR131
CR132
CR133
CR134
CR135
CR136
CR137
CR138
CR139
CR140
CR141
CR142
CR143
CR144
CR145
CR146
CR147
CR148
CR149
CR150
CR151
CR152
CR153
CR154
CR155
CR156
CR157
CR158
CR159
CR160
CR161
CR162
CR163
CR164
CR165
CR166
CR167
CR168
CR169
CR170
CR171
CR172
CR173
CR174
CR175
CR176
CR177
CR178
CR179
CR180
CR181
CR182
CR183
CR184
CR185
CR186
CR187
CR188
CR189
CR190
CR191
CR192
CR193
CR194
CR195
CR196
CR197
CR198
CR199
CR200
CR201
CR202
CR203
CR204
CR205
CR206
CR207
CR208
CR209
CR210
CR211
CR212
CR213
CR214
CR215
CR216
CR217
CR218
CR219
CR220
CR221
CR222
CR223
CR224
CR225
CR226
CR227
CR228
CR229
CR230
CR231
CR232
CR233
CR234
CR235
CR236
CR237
CR238
CR239
CR240
CR241
CR242
CR243
CR244
CR245
CR246
CR247
CR248
CR249
CR250
CR251
CR252
CR253
CR254
CR255
CR256
CR257
CR258
CR259
CR260
CR261
CR262
CR263
CR264
CR265
CR266
CR267
CR268
CR269
CR270
CR271
CR272
CR273
CR274
CR275
CR276
CR277
CR278
CR279
CR280
CR281
CR282
CR283
CR284
CR285
CR286
CR287
CR288
CR289
CR290
CR291
CR292
CR293
CR294
CR295
CR296
CR297
CR298
CR299
CR300
CR301
CR302
CR303
CR304
CR305
CR306
CR307
CR308
CR309
CR310
CR311
CR312
CR313
CR314
CR315
CR316
CR317
CR318
CR319
CR320
CR321
CR322
CR323
CR324
CR325
CR326
CR327
CR328
CR329
CR330
CR331
CR332
CR333
CR334
CR335
CR336
CR337
CR338
CR339
CR340
CR341
CR342
CR343
CR344
CR345
CR346
CR347
CR348
CR349
CR350
CR351
CR352
CR353
CR354
CR355
CR356
CR357
CR358
CR359
CR360
CR361
CR362
CR363
CR364
CR365
CR366
CR367
CR368
CR369
CR370
CR371
CR372
CR373
CR374
CR375
CR376
CR377
CR378
CR379
CR380
CR381
CR382
CR383
CR384
CR385
CR386
CR387
CR388
CR389
CR390
CR391
CR392
CR393
CR394
CR395
CR396
CR397
CR398
CR399
CR400
CR401
CR402
CR403
CR404
CR405
CR406
CR407
CR408
CR409
CR410
CR411
CR412
CR413
CR414
CR415
CR416
CR417
CR418
CR419
CR420
CR421
CR422
CR423
CR424
CR425
CR426
CR427
CR428
CR429
CR430
CR431
CR432
CR433
CR434
CR435
CR436
CR437
CR438
CR439
CR440
CR441
CR442
CR443
CR444
CR445
CR446
CR447
CR448
CR449
CR450
CR451
CR452
CR453
CR454
CR455
CR456
CR457
CR458
CR459
CR460
CR461
CR462
CR463
CR464
CR465
CR466
CR467
CR468
CR469
CR470
CR471
CR472
CR473
CR474
CR475
CR476
CR477
CR478
CR479
CR480
CR481
CR482
CR483
CR484
CR485
CR486
CR487
CR488
CR489
CR490
CR491
CR492
CR493
CR494
CR495
CR496
CR497
CR498
CR499
CR500
CR501
CR502
CR503
CR504
CR505
CR506
CR507
CR508
CR509
CR510
CR511
CR512
CR513
CR514
CR515
CR516
CR517
CR518
CR519
CR520
CR521
CR522
CR523
CR524
CR525
CR526
CR527
CR528
CR529
CR530
CR531
CR532
CR533
CR534
CR535
CR536
CR537
CR538
CR539
CR540
CR541
CR542
CR543
CR544
CR545
CR546
CR547
CR548
CR549
CR550
CR551
CR552
CR553
CR554
CR555
CR556
CR557
CR558
CR559
CR560
CR561
CR562
CR563
CR564
CR565
CR566
CR567
CR568
CR569
CR570
CR571
CR572
CR573
CR574
CR575
CR576
CR577
CR578
CR579
CR580
CR581
CR582
CR583
CR584
CR585
CR586
CR587
CR588
CR589
CR590
CR591
CR592
CR593
CR594
CR595
CR596
CR597
CR598
CR599
CR600
CR601
CR602
CR603
CR604
CR605
CR606
CR607
CR608
CR609
CR610
CR611
CR612
CR613
CR614
CR615
CR616
CR617
CR618
CR619
CR620
CR621
CR622
CR623
CR624
CR625
CR626
CR627
CR628
CR629
CR630
CR631
CR632
CR633
CR634
CR635
CR636
CR637
CR638
CR639
CR640
CR641
CR642
CR643
CR644
CR645
CR646
CR647
CR648
CR649
CR650
CR651
CR652
CR653
CR654
CR655
CR656
CR657
CR658
CR659
CR660
CR661
CR662
CR663
CR664
CR665
CR666
CR667
CR668
CR669
CR670
CR671
CR672
CR673
CR674
CR675
CR676
CR677
CR678
CR679
CR680
CR681
CR682
CR683
CR684
CR685
CR686
CR687
CR688
CR689
CR690
CR691
CR692
CR693
CR694
CR695
CR696
CR697
CR698
CR699
CR700
CR701
CR702
CR703
CR704
CR705
CR706
CR707
CR708
CR709
CR710
CR711
CR712
CR713
CR714
CR715
CR716
CR717
CR718
CR719
CR720
CR721
CR722
CR723
CR724
CR725
CR726
CR727
CR728
CR729
CR730
CR731
CR732
CR733
CR734
CR735
CR736
CR737
CR738
CR739
CR740
CR741
CR742
CR743
CR744
CR745
CR746
CR747
CR748
CR749
CR750
CR751
CR752
CR753
CR754
CR755
CR756
CR757
CR758
CR759
CR760
CR761
CR762
CR763
CR764
CR765
CR766
CR767
CR768
CR769
CR770
CR771
CR772
CR773
CR774
CR775
CR776
CR777
CR778
CR779
CR780
CR781
CR782
CR783
CR784
CR785
CR786
CR787
CR788
CR789
CR790
CR791
CR792
CR793
CR794
CR795
CR796
CR797
CR798
CR799
CR800
CR801
CR802
CR803
CR804
CR805
CR806
CR807
CR808
CR809
CR810
CR811
CR812
CR813
CR814
CR815
CR816
CR817
CR818
CR819
CR820
CR821
CR822
CR823
CR824
CR825
CR826
CR827
CR828
CR829
CR830
CR831
CR832
CR833
CR834
CR835
CR836
CR837
CR838
CR839
CR840
CR841
CR842
CR843
CR844
CR845
CR846
CR847
CR848
CR849
CR850
CR851
CR852
CR853
CR854
CR855
CR856
CR857
CR858
CR859
CR860
CR861
CR862
CR863
CR864
CR865
CR866
CR867
CR868
CR869
CR870
CR871
CR872
CR873
CR874
CR875
CR876
CR877
CR878
CR879
CR880
CR881
CR882
CR883
CR884
CR885
CR886
CR887
CR888
CR889
CR890
CR891
CR892
CR893
CR894
CR895
CR896
CR897
CR898
CR899
CR900
CR901
CR902
CR903
CR904
CR905
CR906
CR907
CR908
CR909
CR910
CR911
CR912
CR913
CR914
CR915
CR916
CR917
CR918
CR919
CR920
CR921
CR922
CR923
CR924
CR925
CR926
CR927
CR928
CR929
CR930
CR931
CR932
CR933
CR934
CR935
CR936
CR937
CR938
CR939
CR940
CR941
CR942
CR943
CR944
CR945
CR946
CR947
CR948
CR949
CR950
CR951
CR952
CR953
CR954
CR955
CR956
CR957
CR958
CR959
CR960
CR961
CR962
CR963
CR964
CR965
CR966
CR967
CR968
CR969
CR970
CR971
CR972
CR973
CR974
CR975
CR976
CR977
CR978
CR979
CR980
CR981
CR982
CR983
CR984
CR985
CR986
CR987
CR988
CR989
CR990
CR991
CR992
CR993
CR994
CR995
CR996
CR997
CR998
CR999
CR1000

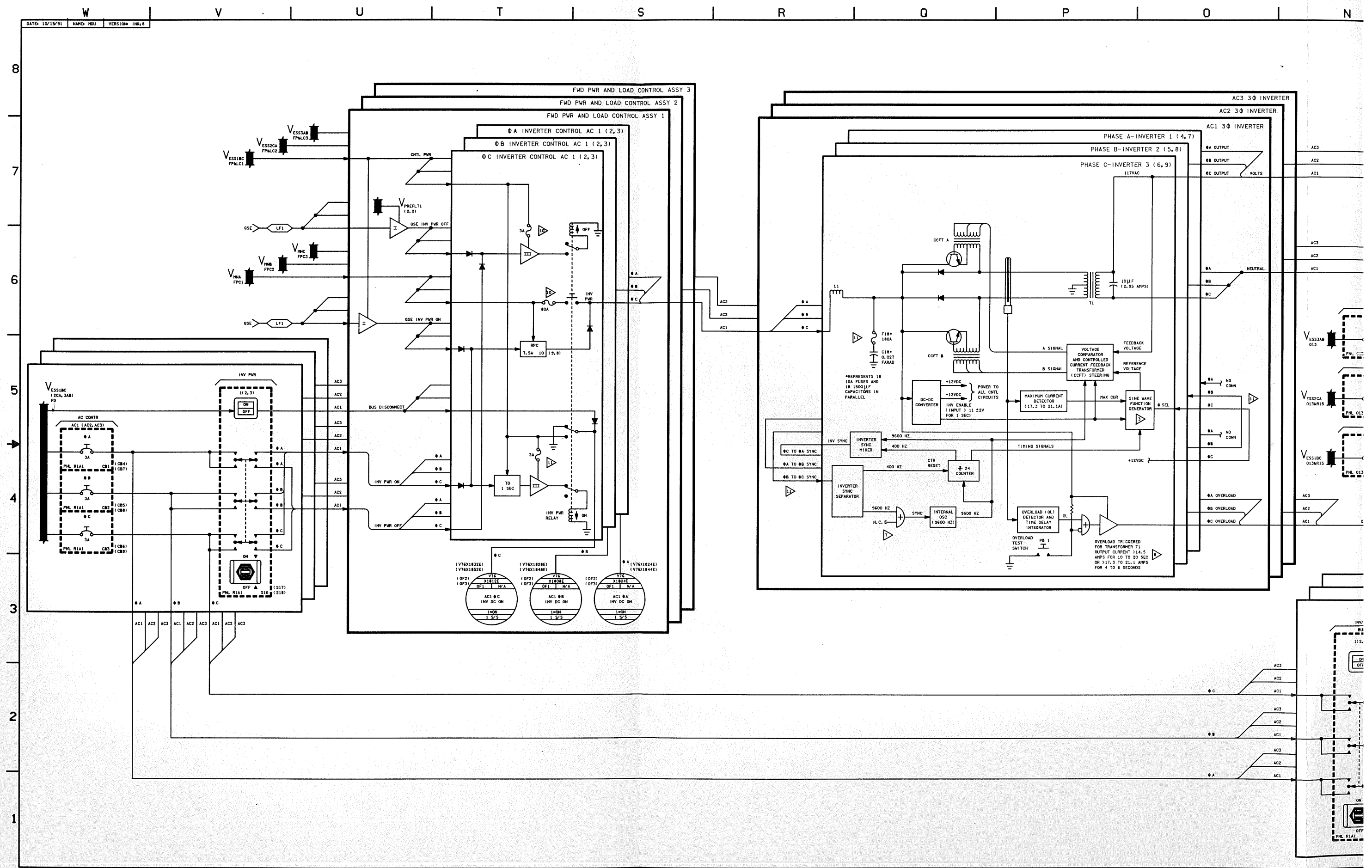

DATE: 10/19/91
NAME: MDU
VERSION: INK:8
FWD PWR AND LOAD CONTROL ASSY 3
FWD PWR AND LOAD CONTROL ASSY 2
FWD PWR AND LOAD CONTROL ASSY 1
ΦA INVERTER CONTROL AC 1 (2,3)
ΦB INVERTER CONTROL AC 1 (2,3)
ΦC INVERTER CONTROL AC 1 (2,3)
AC3 3Φ INVERTER
AC2 3Φ INVERTER
AC1 3Φ INVERTER
PHASE A-INVERTER 1 (4,7)
PHASE B-INVERTER 2 (5,8)
PHASE C-INVERTER 3 (6,9)
CNTL PWR
GSE INV PWR OFF
GSE INV PWR ON
BUS DISCONNECT
INV PWR ON
INV PWR OFF
INV PWR RELAY
INV PWR
AC CONTR
AC1 (AC2, AC3)
VOLTAGE COMPARATOR AND CONTROLLED CURRENT FEEDBACK TRANSFORMER (CCFT) STEERING
FEEDBACK VOLTAGE
REFERENCE VOLTAGE
DC-DC CONVERTER
POWER TO ALL CNTL CIRCUITS
INV ENABLE (INPUT > 11 ±2V FOR 1 SEC)
MAXIMUM CURRENT DETECTOR (17.3 TO 21.1A)
SINE WAVE FUNCTION GENERATOR
INVERTER SYNC MIXER
INVERTER SYNC SEPARATOR
TIMING SIGNALS
24 COUNTER
INTERNAL OSC (9600 HZ)
OVERLOAD (OL) DETECTOR AND TIME DELAY INTEGRATOR
OVERLOAD TEST SWITCH
OVERLOAD TRIGGERED FOR TRANSFORMER T1 OUTPUT CURRENT >14.5 AMPS FOR 10 TO 20 SEC OR >17.3 TO 21.1 AMPS FOR 4 TO 6 SECONDS
NEUTRAL
VOLTS

BASIC REV E-1

DATE: 08/30/90	NAME: BJT	VERSION: BPT: 10
DATE: 09/12/90	NAME: BJT	VERSION: INK: 4
DATE: 09/22/90	NAME: LAM	VERSION: INK: 5

AMC1 ▷
(AFT MOTOR CONTROL ASSEMBLY 1)

30 AC MTR PWR
V_{AC1} AMC1
V_{MNA} APC4
MCA LOGIC
MNA
AFT 1
ON
OFF
PNL MA73C+B 5A
RPC 5A 24
V_{MNA} AMC1
RELAY LOGIC POWER
5.1K
V_{MNA} APC4
AFT POD VLV LOGIC GP 1/3
PNL MA73C+I 5I5
RPC 5A 23
$V_{MNA/B}$ POD/AMC1
V_{AC1} POD/AMC1
MNA/MNB OMS/RCS RELAY LOGIC POWER
AC1 30 OMS/RCS MOTOR VALVE POWER

VENT DOORS
LEFT 8/9 MOTOR 1 — K1 CLS B, K2 CLS A

ET UMBILICAL DOORS
LEFT DRIVE MOTOR 1 — K15 OPN, K16 CLS
LEFT LATCH MOTOR 1 — K17 LCH B, K18 LCH A, K19 RLS B, K20 RLS A
℄ LATCH 1 MOTOR 1 — K5 DPLY B, K6 DPLY A, K7 STW B, K8 STW A
℄ LATCH 2 MOTOR 1 — K9 CLS, K10 DPLY B, K11 DPLY A, K12 STW B, K13 STW A

AFT RCS ISOLATION VALVES
MANIFOLD 2
LEFT FU/OX VALVES (1 EACH) — K21 CLS, K22 OPN
RIGHT FU/OX VALVES (1 EACH) — K23 CLS, K24 OPN
TANK 3/4/5A
LEFT FU VALVE — K27 CLS, K28 OPN
LEFT OX VALVE — K29 CLS, K30 OPN
RIGHT FU VALVE — K31 CLS, K32 OPN
RIGHT OX VALVE — K25 CLS, K26 OPN

RIGHT RCS XFEED MANIFOLD 3/4/5
FUEL VALVE — K35 OPN B, K36 OPN A
OXID VALVE — K33 CLS B, K34 CLS A

LEFT RCS XFEED MANIFOLD 3/4/5
FUEL VALVE — K39 OPN B, K40 OPN A
OXID VALVE — K37 CLS B, K38 CLS A

LEFT OMS XFEED
FUEL VALVE A — K51 OPN A, K52 OPN B
OXID VALVE A — K53 CLS B, K54 CLS A

OMS ISOLATION VALVES
LEFT FUEL VALVE A — K41 CLS B, K42 CLS A
LEFT OXID VALVE A — K43 OPN B, K44 OPN A
RIGHT FUEL VALVE A — K57 CLS B, K58 CLS A
RIGHT OXID VALVE A — K55 CLS B, K56 OPN B

V76 X2251E OA1 N/A — AFT MCA 1 OPER STATUS 1 — 1=NO OP 10 S/S
V76 X2252E OA1 N/A — AFT MCA 1 OPER STATUS 2 — 1=NO OP 10 S/S
V76 X2253E OA1 N/A — AFT MCA 1 OPER STATUS 3 — 1=NO OP 10 S/S
V76 X2254E OA1 N/A — AFT MCA 1 OPER STATUS 4 — 1=NO OP 10 S/S

AMC2 ▷
(AFT MOTOR CONTROL ASSEMBLY 2)

V_{AC2} AMC2 30 AC MTR PWR
MCA LOGIC
MNB
AFT 2
ON
OFF
PNL MA73C+B 5I0
V_{MNB} APC5
RPC 5A 24
V_{MNB} AMC2
RELAY LOGIC POWER
5.1K
AFT POD VLV LOGIC GP 1/2
PNL MA73C+I 5I6
RPC 5A 23
$V_{MNB/C}$ POD/AMC2
V_{AC2} POD/AMC2
MNB/MNC OMS/RCS RELAY LOGIC POWER
AC2 30 OMS/RCS MOTOR VALVE POWER

VENT DOORS
LEFT 8/9 MOTOR 2 — K1 CLS A, K2 OPN B
RIGHT 8/9 MOTOR 2 — K3 CLS A, K4 OPN B

ET UMBILICAL DOORS
LEFT LATCH MOTOR 2 — K5 DPLY A, K6 DPLY B, K7 STW A, K8 STW B
℄ LATCH 1 MOTOR 2 — K9 CLS, K10 OPN, K11 RLS A, K12 RLS B
RIGHT DRIVE MOTOR 2 — K13 LCH A, K14 LCH B
RIGHT LATCH MOTOR 2 — K15 STW A, K16 STW B, K17 DPLY A, K18 DPLY B

AFT RCS ISOLATION VALVES
MANIFOLD 1
LEFT FU/OX VALVES (1 EACH) — K19 CLS, K20 OPN
RIGHT FU/OX VALVES (1 EACH) — K21 CLS, K22 OPN
TANK 3/4/5B
LEFT FU VALVE — K23 CLS, K24 OPN
LEFT OX VALVE — K25 CLS, K26 OPN
RIGHT FU VALVE — K27 CLS, K28 OPN
RIGHT OX VALVE — K29 CLS, K30 OPN

OMS CROSS FEED VALVES
LEFT FUEL VALVE B — K31 CLS, K32 OPN B
LEFT OXID VALVE B — K33 CLS B, K34 OPN A
RIGHT FUEL VALVE B — K35 OPN A, K36 CLS B
RIGHT OXID VALVE B — K37 OPN B, K38 CLS A

V76 X2261E OA2 N/A — AFT MCA 2 OPER STATUS 1 — 1=NO OP 10 S/S
V76 X2262E OA2 N/A — AFT MCA 2 OPER STATUS 2 — 1=NO OP 10 S/S
V76 X2263E OA2 N/A — AFT MCA 2 OPER STATUS 3 — 1=NO OP 10 S/S
V76 X2264E OA2 N/A — AFT MCA 2 OPER STATUS 4 — 1=NO OP 10 S/S

AMC3 ▷
(AFT MOTOR CONTROL ASSEMBLY 3)

30 AC MTR PWR
V_{AC3} AMC3
V_{MNC} APC6
MCA LOGIC
MNC
AFT 3
ON
OFF
PNL MA73C+B S14
RPC 5A 24
V_{MNC} AMC3
RELAY LOGIC POWER
5.1K
AFT POD VLV LOGIC GP 2/3
PNL MA73C+I S17
RPC 5A 23
$V_{MNC/A}$ POD/AMC3
V_{AC3} POD/AMC3
AC3 30 OMS/RCS MOTOR VALVE POWER
MNC/MNA OMS/RCS RELAY LOGIC POWER

VENT DOORS
RIGHT 8/9 MOTOR 1 — K1 CLS A, K2 CLS B

ET UMBILICAL DOORS
LEFT DRIVE MOTOR 2 — K11 OPN, K12 CLS
LEFT LATCH MOTOR 2 — K13 LCH B, K14 LCH A, K15 RLS B, K16 RLS A
℄ LATCH 2 MOTOR 2 — K5 DPLY A, K6 DPLY B, K7 STW A, K8 STW B
RIGHT DRIVE MOTOR 2 — K17 OPN, K18 CLS
RIGHT LATCH MOTOR 1 — K9 CLS, K10 DPLY B, K19 DPLY A, K20 STW B, K21 STW A

AFT RCS ISOLATION VALVES
TANK 1/2
LEFT FU VALVE — K39 OPN B, K40 CLS A
LEFT OX VALVE — K37 OPN A, K38 CLS B
RIGHT FU VALVE — K35 OPN B, K36 CLS A
RIGHT OX VALVE — K41 CLS B, K42 CLS A
MANIFOLD 3
LEFT FU/OX VALVES (1 EACH) — K23 CLS, K24 OPN
RIGHT FU/OX VALVES (1 EACH) — K25 CLS, K26 OPN
MANIFOLD 4
LEFT FU/OX VALVES (1 EACH) — K27 CLS, K28 OPN
RIGHT FU/OX VALVES (1 EACH) — K29 CLS, K30 OPN

RCS XFEED MANIFOLD 1/2
LEFT FUEL VALVE — K43 OPN A, K44 CLS A
LEFT OXID VALVE — K45 OPN A, K46 CLS A
RIGHT FUEL VALVE — K47 OPN B, K48 CLS B
RIGHT OXID VALVE — K49 CLS B, K50 CLS B

RIGHT OMS XFEED
FUEL VALVE A — K51 OPN A, K52 CLS A
OXID VALVE A — K53 OPN A, K54 CLS A

OMS ISOLATION VALVES
LEFT FUEL VALVE B — K55 CLS A, K56 OPN B
LEFT OXID VALVE B — K57 CLS B, K58 OPN A
RIGHT FUEL VALVE B — K59 OPN B, K60 CLS A
RIGHT OXID VALVE B — K61 CLS B, K62 OPN A

V76 X2271E OA3 N/A — AFT MCA 3 OPER STATUS 1 — 1=NO OP 10 S/S
V76 X2272E OA3 N/A — AFT MCA 3 OPER STATUS 2 — 1=NO OP 10 S/S
V76 X2273E OA3 N/A — AFT MCA 3 OPER STATUS 3 — 1=NO OP 10 S/S
V76 X2274E OA3 N/A — AFT MCA 3 OPER STATUS 4 — 1=NO OP 10 S/S

7. SEE TABLE 2-I FOR VENDOR DRAWING REFERENCES

▷ SPARE CIRCUITRY

5. EXCEPT FOR PAYLOAD RETENTION LATCH MOTORS (SHEET 2), WHEN 'A' AND 'B' RELAYS ARE INDICATED FOR A PARTICULAR MOTOR POWER CIRCUIT (I.E. CLS A AND CLS B, OPN A AND OPN B---STW A AND STW B), THEN BOTH THE 'A' AND 'B' RELAYS MUST BE OPERATED FOR AC POWER TRANSFER TO THE MOTOR. NORMALLY, POSITION FEEDBACK SIGNALS WILL AUTOMATICALLY DE-ENERGIZE THE RELAYS AND REMOVE AC POWER FROM THE MOTORS WHEN DESIRED POSITION IS REACHED

▷ RELAY WIRING SEQUENCE FOR RELAYS CONNECTED IN SERIES TO AN MCA OPER STATUS TELEMETRY EVENT HAS BEEN CHANGED TO SIMPLIFY DRAWING. PROPER SEQUENCE IS INDICATED BY NUMBER NEAR RELAY POLE. RELAY WIRING SEQUENCE NUMBERS IN PARENTHESIS FOR OV-102 ONLY

▷ RELAY LOGIC POWER IS USED TO OPERATE RELAYS COMMANDED VIA MDM SIGNAL AND MAY BE USED WHEN COMMANDING RELAYS VIA MANUAL SWITCHES. RELAY LOGIC POWER IS ALSO USED TO POWER POSITION FEEDBACK SIGNALS THAT DE-ENERGIZE RELAYS, DRIVE TALKBACKS AND TELEMETRY WHEN DESIRED POSITION IS REACHED

2. MOTOR CONTROL ASSEMBLIES (MCA) CONTAIN RELAY LOGIC WHEREBY 3 PHASE AC MOTOR POWER IS APPLIED AS ABC OR ACB PHASE SEQUENCE FOR MOTOR ROTATION DIRECTION CONTROL. AC MOTOR POWER IS REMOVED (RELAYS DE-ENERGIZED) WHEN DESIRED POSITION IS REACHED

NOTES: 1. EACH RELAY POLE IN A SERIES CONNECTION TO AN MCA OPER STATUS TELEMETRY EVENT IS THE FOURTH POLE ON THE INDICATED MOTOR CONTROL RELAY. SEE REFERENCED DRAWING FOR THE REST OF RELAY CIRCUIT

*4 FMC & AMC1

SIGNATURE		DATE	
DSGN	V. ORTIZ	8/23/78	NATIONAL AERONAUTICS AND SPACE ADMINISTRATION LYNDON B. JOHNSON SPACE CENTER HOUSTON, TEXAS
DR		9/13/78	
ENGR	C. B. GUDERIAN		MCA DISTRIBUTION
ENGR		9/13/78	
APP			
APP			SPACE SHUTTLE / DWG NO 2.4
OMNIPLAN	S. K. Kinkade	10-18-78	ALL
LTR	E	PCN	104.5 X 34 / PAGE / SHEET 1 OF 3

BASIC REV E

FMC1 (FORWARD MOTOR CONTROL ASSEMBLY 1)

FMC2 (FWD MOTOR CONTROL ASSEMBLY 2)

FMC3 (FWD MOTOR CONTROL ASSEMBLY 3)

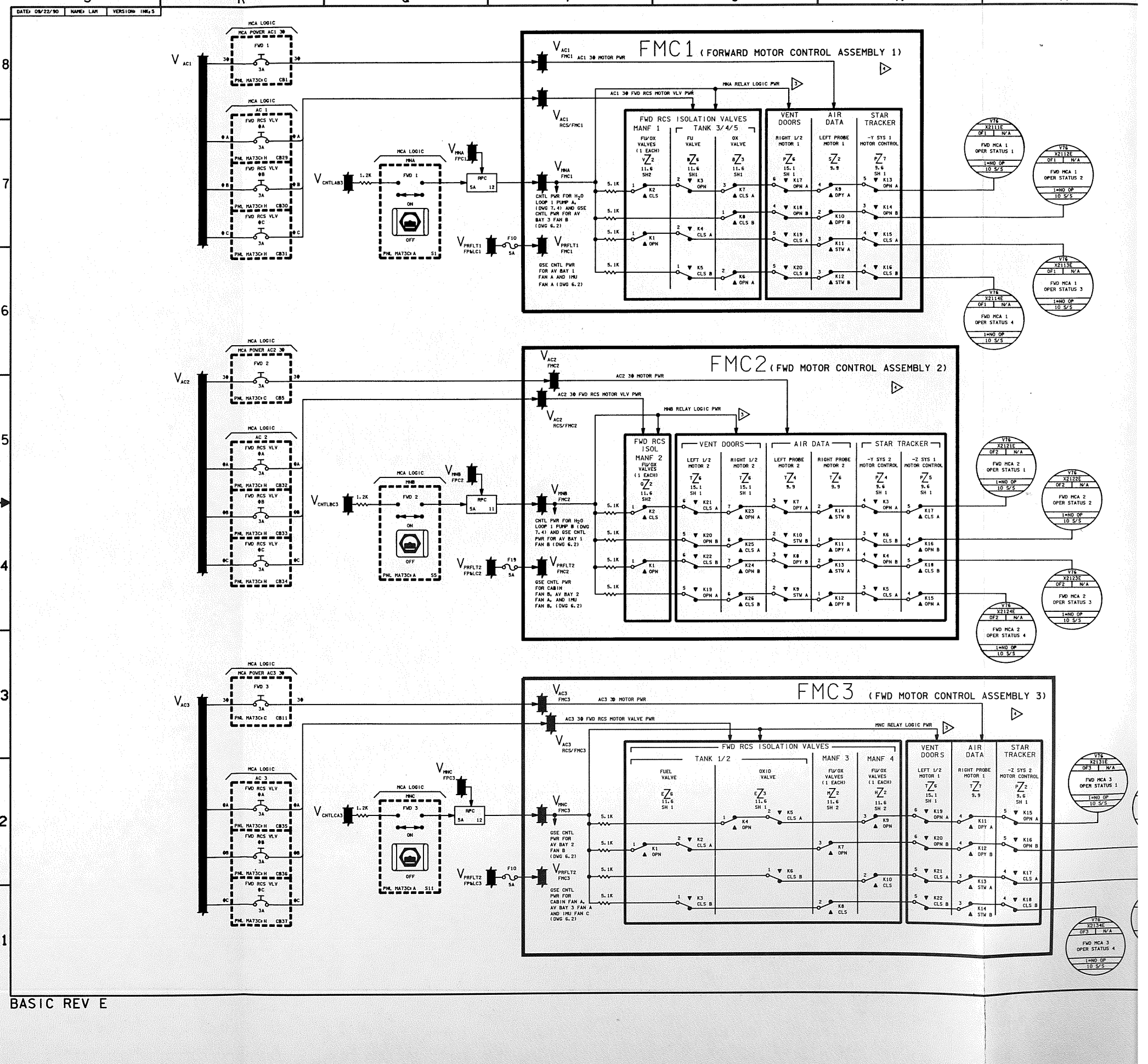
DATE: 08/22/90
NAME: LAM
VERSION: INK=5
S
R
Q
P
O
N
M
8
7
6
5
4
3
2
1
MCA LOGIC
MCA POWER AC1 3Φ
FWD 1
PML MA73C:H CB1
MCA LOGIC
AC 1
FWD RCS VLV ΦA
FWD RCS VLV ΦB
FWD RCS VLV ΦC
PML MA73C:H CB29
PML MA73C:H CB30
PML MA73C:H CB31
MCA LOGIC
MNA
FWD 1
ON
OFF
PML MA73C:A S1
RPC 5A 12
F10 5A
1.2K
V_{AC1}
$V_{CNTLAB3}$
V_{MNA} FPC1
V_{PRFLT1} FPALC1
V_{AC1} FMC1 AC1 3Φ MOTOR PWR
V_{AC1} RCS/FMC1
V_{MNA} FMC1
V_{PRFLT1} FMC1
CNTL PWR FOR H_2O LOOP 1 PUMP A (DWG 7.4) AND GSE CNTL PWR FOR AV BAY 3 FAN B (DWG 6.2)
GSE CNTL PWR FOR AV BAY 1 FAN A AND IMU FAN A (DWG 6.2)
FMC1 (FORWARD MOTOR CONTROL ASSEMBLY 1)
AC1 3Φ FWD RCS MOTOR VLV PWR
MNA RELAY LOGIC PWR
FWD RCS ISOLATION VALVES
MANF 1
TANK 3/4/5
FU/OX VALVES (1 EACH)
FU VALVE
OX VALVE
VENT DOORS
AIR DATA
STAR TRACKER
RIGHT I/2 MOTOR 1
LEFT PROBE MOTOR 1
-Y SYS 1 MOTOR CONTROL
5.1K
V76 X2111E OF1 N/A FWD MCA 1 OPER STATUS 1 1=NO OP 10 S/S
V76 X2112E OF1 N/A FWD MCA 1 OPER STATUS 2 1=NO OP 10 S/S
V76 X2113E OF1 N/A FWD MCA 1 OPER STATUS 3 1=NO OP 10 S/S
V76 X2114E OF1 N/A FWD MCA 1 OPER STATUS 4 1=NO OP 10 S/S
MCA LOGIC
MCA POWER AC2 3Φ
FWD 2
PML MA73C:H CB5
MCA LOGIC
AC 2
FWD RCS VLV ΦA
FWD RCS VLV ΦB
FWD RCS VLV ΦC
PML MA73C:H CB32
PML MA73C:H CB33
PML MA73C:H CB34
MCA LOGIC
MNB
FWD 2
ON
OFF
PML MA73C:A S5
RPC 5A 11
F19 5A
1.2K
V_{AC2}
$V_{CNTLBC3}$
V_{MNB} FPC2
V_{PRFLT2} FPALC2
V_{AC2} FMC2
V_{AC2} RCS/FMC2
V_{MNB} FMC2
V_{PRFLT2} FMC2
CNTL PWR FOR H_2O LOOP 1 PUMP B (DWG 7.4) AND GSE CNTL PWR FOR AV BAY 1 FAN B (DWG 6.2)
GSE CNTL PWR FOR CABIN FAN B, AV BAY 2 FAN A, AND IMU FAN B, (DWG 6.2)
FMC2 (FWD MOTOR CONTROL ASSEMBLY 2)
AC2 3Φ MOTOR PWR
AC2 3Φ FWD RCS MOTOR VLV PWR
MNB RELAY LOGIC PWR
FWD RCS ISOL MANF 2
FU/OX VALVES (1 EACH)
VENT DOORS
AIR DATA
STAR TRACKER
LEFT I/2 MOTOR 2
RIGHT I/2 MOTOR 2
LEFT PROBE MOTOR 2
RIGHT PROBE MOTOR 2
-Y SYS 2 MOTOR CONTROL
-Z SYS 1 MOTOR CONTROL
5.1K
V76 X2121E OF2 N/A FWD MCA 2 OPER STATUS 1 1=NO OP 10 S/S
V76 X2122E OF2 N/A FWD MCA 2 OPER STATUS 2 1=NO OP 10 S/S
V76 X2123E OF2 N/A FWD MCA 2 OPER STATUS 3 1=NO OP 10 S/S
V76 X2124E OF2 N/A FWD MCA 2 OPER STATUS 4 1=NO OP 10 S/S
MCA LOGIC
MCA POWER AC3 3Φ
FWD 3
PML MA73C:H CB11
MCA LOGIC
AC 3
FWD RCS VLV ΦA
FWD RCS VLV ΦB
FWD RCS VLV ΦC
PML MA73C:H CB35
PML MA73C:H CB36
PML MA73C:H CB37
MCA LOGIC
MNC
FWD 3
ON
OFF
PML MA73C:A S11
RPC 5A 12
F10 5A
1.2K
V_{AC3}
$V_{CNTLCA3}$
V_{MNC} FPC3
V_{PRFLT2} FPALC3
V_{AC3} FMC3
V_{AC3} RCS/FMC3
V_{MNC} FMC3
V_{PRFLT2} FMC3
GSE CNTL PWR FOR AV BAY 2 FAN B (DWG 6.2)
GSE CNTL PWR FOR CABIN FAN A, AV BAY 3 FAN A AND IMU FAN C (DWG 6.2)
FMC3 (FWD MOTOR CONTROL ASSEMBLY 3)
AC3 3Φ MOTOR PWR
AC3 3Φ FWD RCS MOTOR VALVE PWR
MNC RELAY LOGIC PWR
FWD RCS ISOLATION VALVES
TANK 1/2
MANF 3
MANF 4
FUEL VALVE
OXID VALVE
FU/OX VALVES (1 EACH)
VENT DOORS
AIR DATA
STAR TRACKER
LEFT I/2 MOTOR 1
RIGHT PROBE MOTOR 1
-Z SYS 2 MOTOR CONTROL
5.1K
V76 X2131E OF3 N/A FWD MCA 3 OPER STATUS 1 1=NO OP 10 S/S
V76 X2134E OF3 N/A FWD MCA 3 OPER STATUS 4 1=NO OP 10 S/S
BASIC REV E

DATE: 01/30/96	NAME: SVJ	VERSION: BPT.14
DATE: 02/12/96	NAME: LAM	VERSION: BPT.15
DATE: 02/16/96	NAME: JMB	VERSION: INK.7

VENT DOOR

LEFT NO 5 MOTOR 2

VENT DOORS

RIGHT NO 3 MOTOR 1 — RIGHT NO 5 MOTOR 1 — RIGHT NO 6 MOTOR 1

PAYLOAD BAY DOORS

STBD PDU MOTOR 1 — PORT FWD BKHD LATCH MOTOR 1 — STBD FWD BKHD LATCH MOTOR 1 — ℄ LATCH 9-12 MOTOR 1

FREON RADIATOR

PORT SYS A DEPLOY MOTOR 1 — PORT SYS A LATCH 1-6 MOTOR 1 — PORT SYS A LATCH 7-12 MOTOR 1

REMOTE MANIPULATOR

PORT MID RETN LATCH MOTOR 1 — STBD FWD RETN LATCH MOTOR 2

PAYLOAD RETENTION ▷

PL SELECT POS 1 SYS 1 LATCH MOTORS — PL SELECT POS 2 SYS 1 LATCH MOTORS — PL SELECT POS 3 SYS 1 LATCH MOTORS

MMA RELAY LOGIC POWER

AC1 30 MOTOR POWER

V_{AC1PBD} MMC1

V_{AC1PBM} MMC1

V76 X2161E — AC1PBM/PBD MMC1 BUS ENABL 1 — 1=DISABLE — 1 S/S

V76 X2162E — AC1PBM/PBD MMC1 BUS ENABL 2 — 1=DISABLE — 1 S/S

(MID MOTOR CONTROL ASSEMBLY 1) MMC1 ▷

CNTLAB1/CA1 — CNTLAB2/CA2

PBM POWER ON SYS 1 TO MMC1 (AC1)

(MID MOTOR CONTROL ASSEMBLY 3) MMC3

V_{AC1PBD} MMC3

V_{AC1PBM} MMC3

V_{AC2} MMC3

V_{AC2PBM} MMC3

V76 X2181E — AC1PBM/PBD MMC3 BUS ENABL 1 — 1=DISABLE — 1 S/S

V76 X2182E — AC1PBM/PBD MMC3 BUS ENABL 2 — 1=DISABLE — 1 S/S

V76 X2183E — AC2PBM MMC3 BUS ENABL 1 — 1=DISABLE — 1 S/S

V76 X2184E — AC2PBM MMC3 BUS ENABL 2 — 1=DISABLE — 1 S/S

V76 X2218E — MID MCA 1 OPER STATUS 8 — 1=NO OP — 10 S/S

V76 X2217E — MID MCA 1 OPER STATUS 7 — 1=NO OP — 10 S/S

V76 X2216E — MID MCA 1 OPER STATUS 6 — 1=NO OP — 10 S/S

V76 X2215E — MID MCA 1 OPER STATUS 5 — 1=NO OP — 10 S/S

V76 X2214E — MID MCA 1 OPER STATUS 4 — 1=NO OP — 10 S/S

V76 X2213E — MID MCA 1 OPER STATUS 3 — 1=NO OP — 10 S/S

V76 X2212E — MID MCA 1 OPER STATUS 2 — 1=NO OP — 10 S/S

V76 X2211E — MID MCA 1 OPER STATUS 1 — 1=NO OP — 10 S/S

V76 X2237E — MID MCA 3 OPER STATUS 7 — 1=NO OP — 10 S/S

V76 X2236E — MID MCA 3 OPER STATUS 6 — 1=NO OP — 10 S/S

V76 X2235E — MID MCA 3 OPER STATUS 5 — 1=NO OP — 10 S/S

V76 X2234E — MID MCA 3 OPER STATUS 4 — 1=NO OP — 10 S/S

V76 X2233E — MID MCA 3 OPER STATUS 3 — 1=NO OP — 10 S/S

V76 X2232E — MID MCA 3 OPER STATUS 2 — 1=NO OP — 10 S/S

V76 X2231E — MID MCA 3 OPER STATUS 1 — 1=NO OP — 10 S/S

▷ VENT DOORS 4 AND 7 MOTORS AND MECHANICAL EQUIPMENT HAVE BEEN REMOVED. RELAYS AND RELAY LOGIC, INCLUDING SWITCHING, COMMANDING, AND POSITION FEEDBACK, ARE STILL OPERATIONAL

▷ ONLY ON FLIGHTS USING STARBOARD RHS

7. SEE TABLE 2-I FOR VENDOR DRAWING REFERENCES

▷ THERE ARE 5 LATCH AND RELEASE RELAYS PER PAYLOAD SELECT POSITIONS 1, 2, OR 3. THESE RELAYS ARE OPERATED BY TOGGLE SWITCHES WHICH ARE ENABLED AFTER THE FOLLOWING STEPS:
1) SYSTEM 1 OR, SYSTEM 2 PAYLOAD LOGIC POWER "ON" (REDUNDANT MOTOR DRIVE LOGIC PWR)
2) PAYLOAD BAY MECH POWER (SYS 1 OR SYS 2) ENABLED
3) PAYLOAD SELECT POSITION 1, 2, OR 3 (PANEL A6A1)

5. EXCEPT FOR PAYLOAD RETENTION LATCH MOTORS, WHEN "A" AND "B" RELAYS ARE INDICATED FOR A PARTICULAR MOTOR POWER CIRCUIT (I.E. CLS A AND CLS B, OPN A AND OPN B, STW A AND STW B), BOTH THE "A" AND "B" RELAYS MUST BE OPERATED FOR AC POWER TRANSFER TO THE MOTOR. NORMALLY, POSITION FEEDBACK SIGNALS WILL AUTOMATICALLY DE-ENERGIZE THE RELAYS AND REMOVE

▷ RELAY WIRING SEQUENCE FOR RELAYS CONNECTED IN SERIES TO AN MCA OPER STATUS TELEMETRY EVENT HAS BEEN CHANGED TO SIMPLIFY THE DRAWING. PROPER SEQUENCE IS INDICATED BY NUMBERS NEAR RELAY POLE. RELAY WIRING SEQUENCE NUMBERS IN PARENTHESIS FOR OV102 ONLY

▷ RELAY LOGIC POWER IS USED TO OPERATE RELAYS COMMANDED VIA MDM SIGNALS AND MAY BE USED WHEN COMMANDING RELAYS VIA MANUAL SWITCHES. RELAYS LOGIC POWER IS ALSO USED TO POWER POSITION FEEDBACKS. SIGNALS THAT DE-ENERGIZE RELAYS, DRIVE TALKBACKS AND TELEMETRY WHEN DESIRED POSITION IS REACHED

2. MOTOR CONTROL ASSEMBLYS (MCA'S) CONTAIN RELAY LOGIC WHEREBY 3 PHASE AC MOTOR POWER IS APPLIED AS ABC OR ACB PHASE SEQUENCE FOR MOTOR ROTATION DIRECTION CONTROL. AC MOTOR POWER IS REMOVED (RELAY DE-ENERGIZED) WHEN DESIRED POSITION IS REACHED

NOTES: ▷ EACH RELAY POLE IN A SERIES CONNECTION TO AN MCA OPER STATUS EVENT IS A FOURTH POLE ON THE INDICATED MOTOR CONTROL RELAY. SEE REFERENCE DRAWING FOR REST OF RELAY CIRCUIT. SEE ALSO 4-POLE RELAY DIAGRAM NOTE 1 DWG 2.4-3

4 MMC1/3 2

SIGNATURE	DATE	
DSON VIC ORTIZ		NATIONAL AERONAUTICS AND SPACE ADMINISTRATION LYNDON B. JOHNSON SPACE CENTER HOUSTON, TEXAS
DR SANDY KIMBRELL		
ENGR C.B. GUDERIAN		MCA DISTRIBUTION
ENGR Carl B. Guderian 2/16/96		
APP Sandy Kimbrell 2/16/96		
APP		SPACE SHUTTLE — DWG NO 2.4
CADS S. K. Kimbrell 6-17-96		ALL
LTR E PCN 6		93.5 x 34 — PAGE — SHEET 2 OF 3

BASIC REV E-6

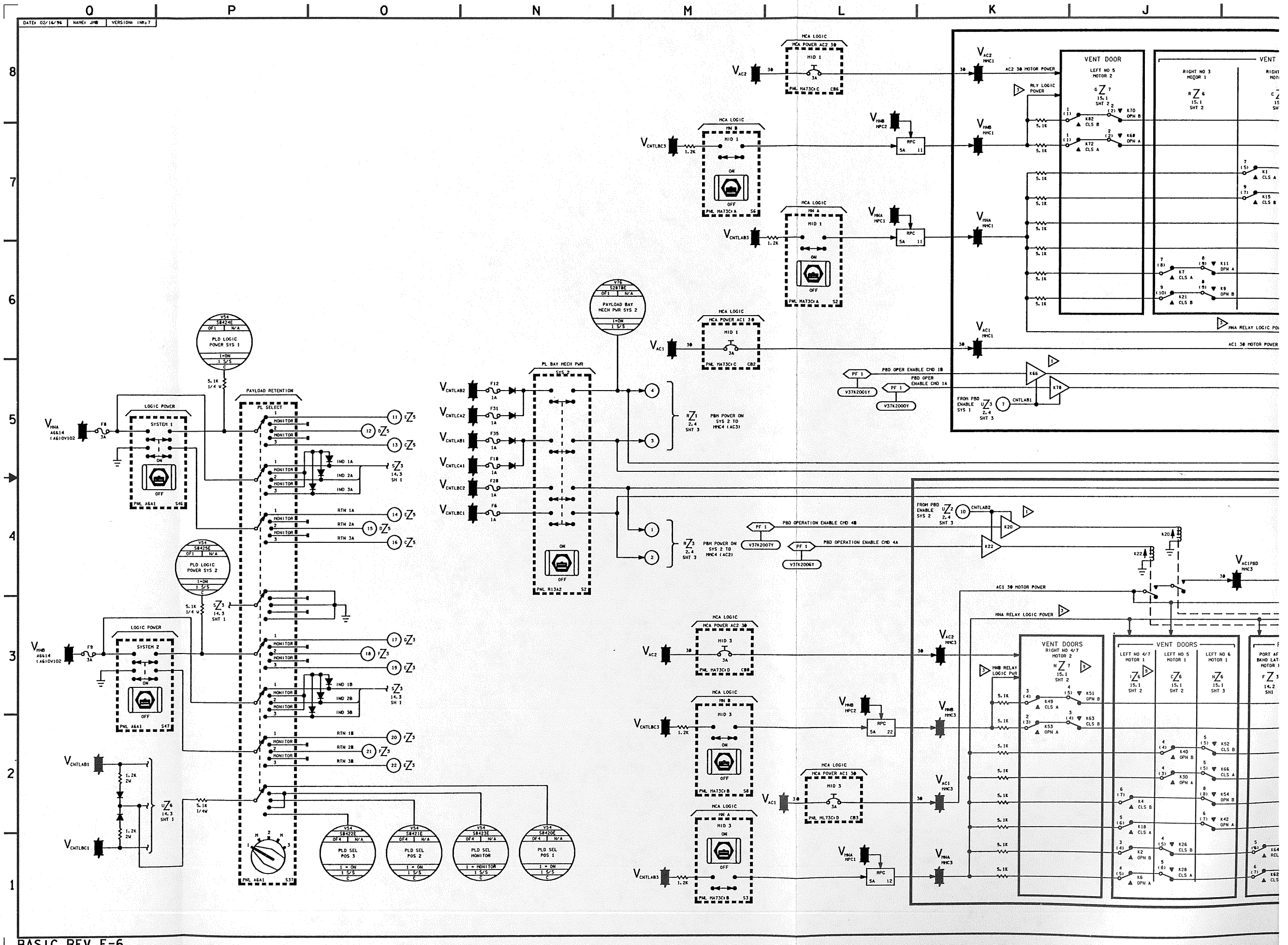
HCA LOGIC
HCA POWER AC2 3Ø
MID 1
3A
PNL MA73C+C CB6
V_{AC2}
V_{HNB} MPC2
RPC 5A 11
HCA LOGIC
HN B
MID 1
ON
OFF
PNL MA73C+A S6
$V_{CNTLBC3}$ 1.2K
V_{HNB} MMC1
HCA LOGIC
HN A
MID 1
PNL MA73C+A S2
$V_{CNTLAB3}$ 1.2K
V_{HNA} MPC1
V_{HNA} MMC1
VENT DOOR
LEFT NO 5 MOTOR 2
RIGHT NO 3 MOTOR 1
VENT
V_{AC2} MMC1
AC2 3Ø MOTOR POWER
RLY LOGIC POWER
K70 OPN B
K82 CLS B
K72 CLS A
K60 OPN A
K1 CLS A
K15 CLS B
K7 CLS A
K11 OPN A
K21 CLS B
K9 OPN B
HNA RELAY LOGIC PO
V_{AC1} MMC1
AC1 3Ø MOTOR POWER
V16 S2878E
PAYLOAD BAY MECH PWR SYS 2
1=ON
HCA LOGIC
HCA POWER AC1 3Ø
MID 1
3A
PNL MA73C+C CB2
V_{AC1}
PF 1
V37K2001Y
PBD OPER ENABLE CMD 1B
PBD OPER ENABLE CMD 1A
V37K2000Y
K66
K78
FROM PBD ENABLE SYS 1 UZ3 2,4 SHT 3
CNTLAB1
V54 S8424E
PLD LOGIC POWER SYS 1
1=ON
5.1K 1/4 W
PAYLOAD RETENTION
PL SELECT
LOGIC POWER
SYSTEM 1
V_{HNA} A6&14 (A6)0V102
F8 3A
PNL A6A1 S46
MONITOR
IND 1A
IND 2A
IND 3A
RTN 1A
RTN 2A
RTN 3A
PL BAY MECH PWR SYS 2
$V_{CNTLAB2}$ F12 1A
$V_{CNTLCA2}$ F31 1A
$V_{CNTLAB1}$ F35 1A
$V_{CNTLCA1}$ F18 1A
$V_{CNTLBC2}$ F28 1A
$V_{CNTLBC1}$ F6 1A
PNL R13A2 S2
PBH POWER ON SYS 2 TO MMC4 (AC3)
PBH POWER ON SYS 2 TO MMC4 (AC2)
PBD OPERATION ENABLE CMD 4B
PBD OPERATION ENABLE CMD 4A
V37K2007Y
V37K2006Y
V54 S8425E
PLD LOGIC POWER SYS 2
LOGIC POWER
SYSTEM 2
V_{HNB} A6&14 (A6)0V102
F9 3A
PNL A6A1 S47
IND 1B
IND 2B
IND 3B
RTN 1B
RTN 2B
RTN 3B
$V_{CNTLAB1}$
$V_{CNTLBC1}$
1.2K 2W
5.1K 1/4W
V54 S8422E PLD SEL POS 3
V54 S8421E PLD SEL POS 2
V54 S8423E PLD SEL MONITOR
V54 S8420E PLD SEL POS 1
1=ON
PNL A6A1 S37
HCA LOGIC
HCA POWER AC2 3Ø
MID 3
3A
PNL HA73C+D CB8
V_{AC2}
V_{HNB} MPC2
RPC 5A 22
HCA LOGIC
HN B
MID 3
ON
OFF
PNL HA73C+B S8
$V_{CNTLBC3}$ 1.2K
V_{HNB} MMC3
HCA LOGIC
HCA POWER AC1 3Ø
MID 3
3A
PNL HL73C+D CB3
V_{AC1}
V_{AC1} MMC3
HCA LOGIC
HN A
MID 3
ON
OFF
PNL HA73C+B S3
$V_{CNTLAB3}$ 1.2K
V_{HNA} MPC1
RPC 5A 12
V_{HNA} MMC3
FROM PBD ENABLE SYS 2 UZ2 2,4 SHT 3
CNTLAB2
K20
K22
V_{AC1PBD} MMC3
AC1 3Ø MOTOR POWER
HNA RELAY LOGIC POWER
HNB RELAY LOGIC PWR
VENT DOORS
RIGHT NO 4/7 MOTOR 2
LEFT NO 4/7 MOTOR 1
LEFT NO 5 MOTOR 1
LEFT NO 6 MOTOR 1
K51 OPN B
K49 CLS A
K63 CLS B
K53 OPN A
K52 CLS B
K40 OPN B
K66 CLS A
K30 OPN A
K4 CLS B
K54 OPN B
K18 CLS A
K42 OPN A
K26 CLS B
K2 OPN B
K28 CLS A
K6 OPN A

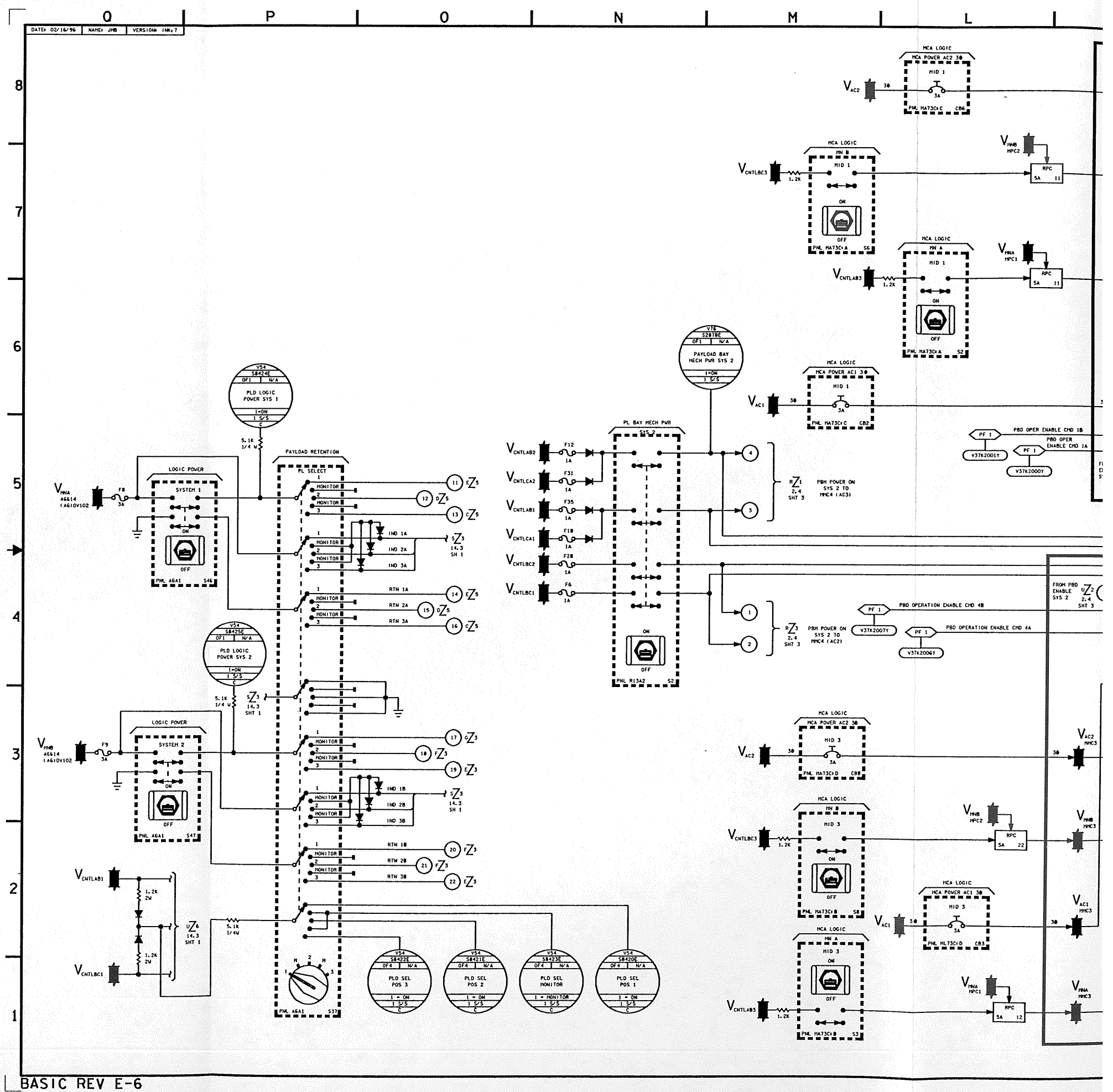

DATE: 02/16/96
NAME: JMB
VERSION: INK:7
PAYLOAD RETENTION
PL SELECT
LOGIC POWER
SYSTEM 1
SYSTEM 2
PLD LOGIC POWER SYS 1
PLD LOGIC POWER SYS 2
PL BAY MECH PWR
PAYLOAD BAY MECH PWR SYS 2
MCA LOGIC
MCA POWER AC2 30
MCA POWER AC1 30
PBM POWER ON SYS 2 TO MMC4 (AC3)
PBM POWER ON SYS 2 TO MMC4 (AC2)
PBD OPER ENABLE CMD 1B
PBD OPER ENABLE CMD 1A
PBD OPERATION ENABLE CMD 4B
PBD OPERATION ENABLE CMD 4A
FROM PBD ENABLE SYS 2
PLD SEL POS 3
PLD SEL POS 2
PLD SEL MONITOR
PLD SEL POS 1

BASIC REV E-6

DATE: 05/22/90	NAME: VSH	VERSION INK: 17
DATE: 01/29/96	NAME: JMB	VERSION BPT: 3
DATE: 02/16/96	NAME: JMB	VERSION INK: 18

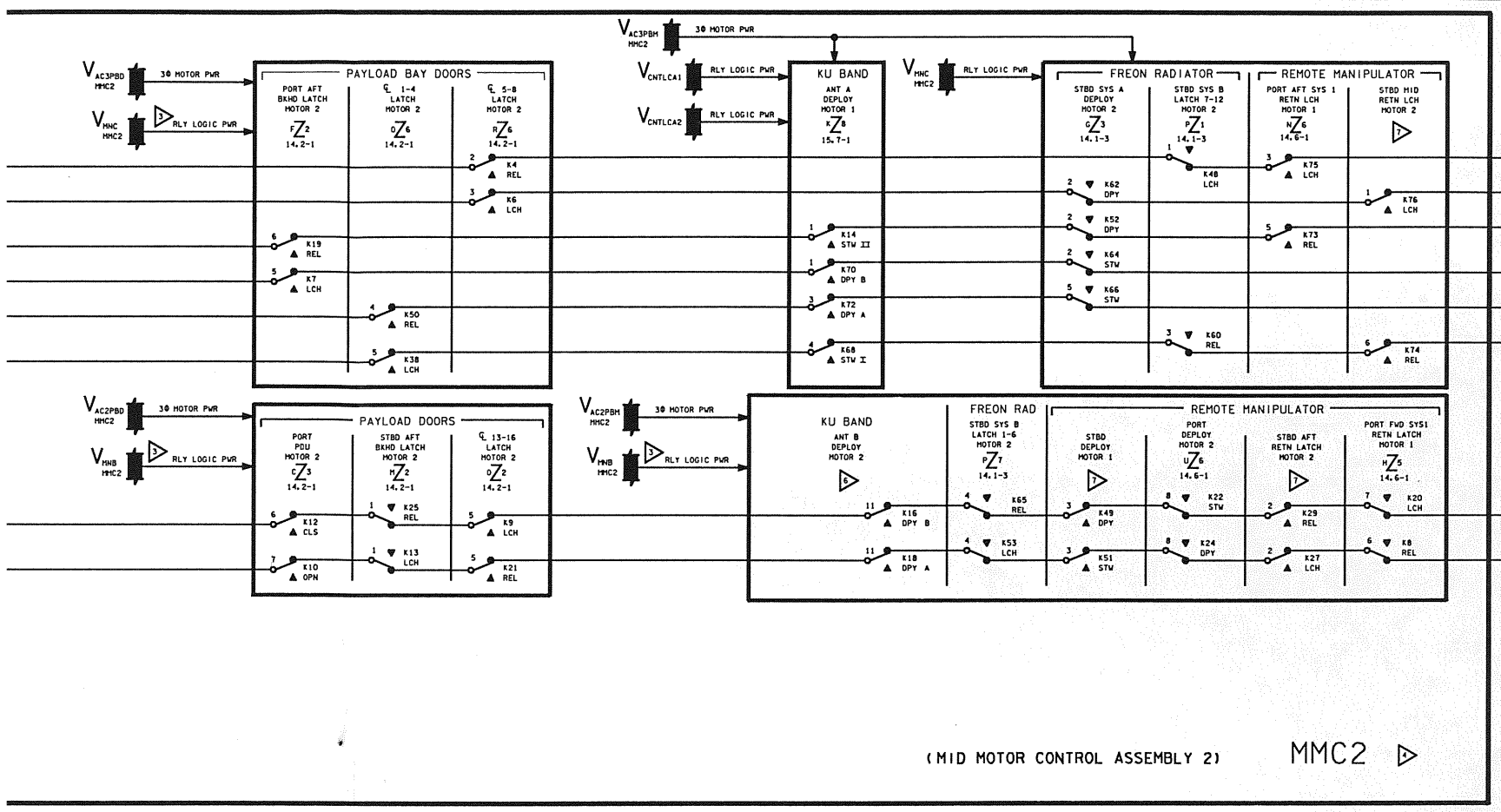

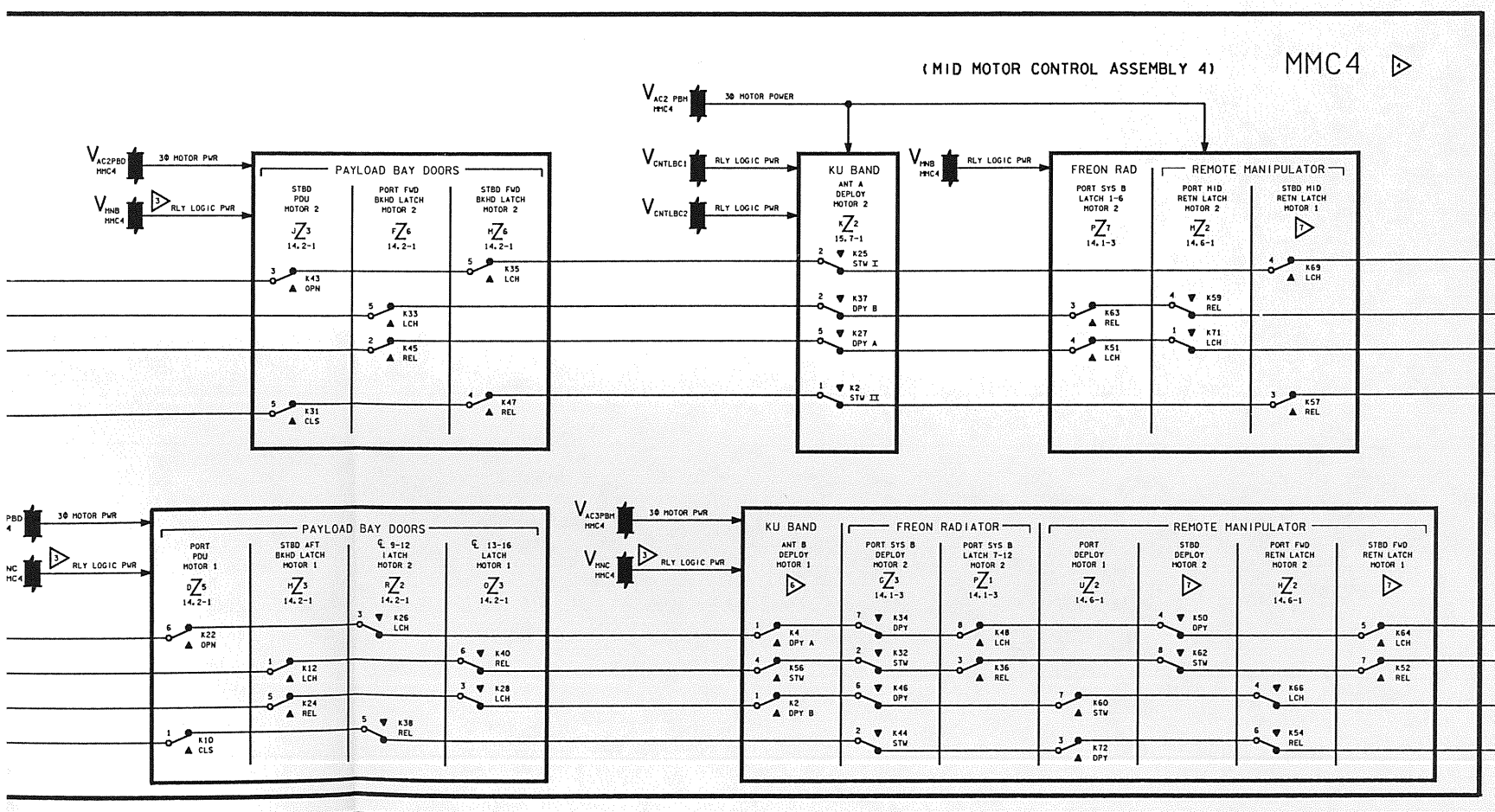

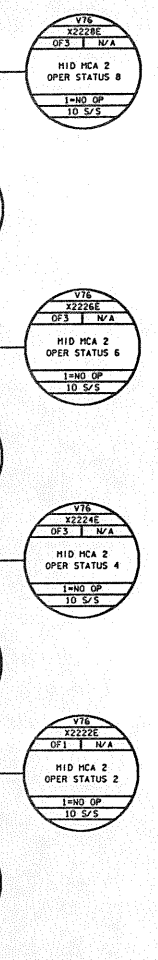

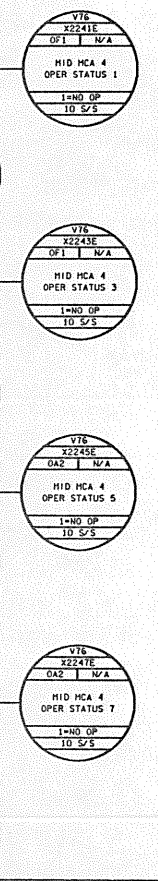

▷ VENTS DOORS 4 AND 7 MOTORS AND MECHANICAL EQUIPMENT HAVE BEEN REMOVED. RELAYS AND RELAY LOGIC, INCLUDING SWITCHING, COMMANDING AND POSITION FEEDBACK, ARE STILL OPERATIONAL

9. SEE TABLE 2-I FOR VENDOR DRAWING REFERENCES

8. PBD: PAYLOAD BAY DOORS
PBM: PAYLOAD BAY MECHANICAL

▷ ONLY ON FLIGHTS USING STARBOARD RMS

▷ SPARE CIRCUITRY

5. EXCEPT FOR PAYLOAD RETENTION LATCH MOTORS (SHEET 2), WHEN 'A' AND 'B' RELAYS ARE INDICATED FOR A PARTICULAR MOTOR POWER CIRCUIT (I.E. CLS A AND CLS B, OPN A AND OPN B--STW A AND STW B), THEN BOTH THE 'A' AND 'B' RELAYS MUST BE OPERATED FOR AC POWER TRANSFER TO THE MOTOR. NORMALLY, POSITION FEEDBACK SIGNALS WILL AUTOMATICALLY DE-ENERGIZE THE RELAYS AND REMOVE AC POWER FROM THE MOTORS WHEN DESIRED POSITION IS REACHED

▷ RELAY WIRING SEQUENCE FOR RELAYS CONNECTED IN SERIES TO AN MCA OPER STATUS TELEMETRY EVENT HAS BEEN CHANGED TO SIMPLIFY DRAWING. PROPER SEQUENCE IS INDICATED BY NUMBERS NEAR RELAY POLE WITH THE NUMBER 1 RELAY POLE BEING CONNECTED TO THE 5.1K RESISTOR

▷ RELAY LOGIC POWER IS USED TO OPERATE RELAYS COMMANDED VIA MDM SIGNALS AND MAY BE USED WHEN COMMANDING RELAYS VIA MANUAL SWITCHES. RELAY LOGIC POWER IS ALSO USED TO POWER POSITION FEEDBACK SIGNALS THAT DE-ENERGIZE RELAYS, DRIVE TALKBACKS AND TELEMETRY WHEN DESIRED POSITION IS REACHED

2. MOTOR CONTROL ASSEMBLIES (MCA'S) CONTAIN RELAY LOGIC WHEREBY 3 PHASE AC MOTOR POWER IS APPLIED AS ABC OR ACB PHASE SEQUENCE FOR MOTOR ROTATION DIRECTION CONTROL. AC MOTOR POWER IS REMOVED (RELAYS DE-ENERGIZED) WHEN DESIRED POSITION IS REACHED.

NOTES: ▷ EACH RELAY POLE, IN A SERIES CONNECTION TO AN MCA OPER STATUS TELEMETRY EVENT, HAS A FOURTH POLE ON THE INDICATED MOTOR CONTROL RELAY. SEE REFERENCED DRAWING FOR REST OF RELAY CIRCUIT. (TYPICAL RELAY SHOWN BELOW)

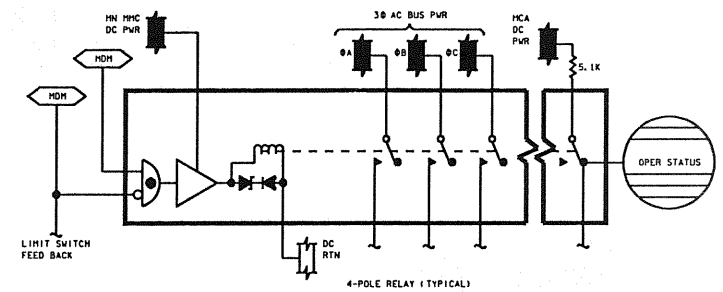

4 MMC2/4 3

SIGNATURE	DATE	NATIONAL AERONAUTICS AND SPACE ADMINISTRATION LYNDON B. JOHNSON SPACE CENTER HOUSTON, TEXAS	
DSGN P. SHERRILL	8/21/78		
DR			
ENGR C. GUDERIAN		MCA DISTRIBUTION	
ENGR	2/16/96		
APP	2/16/96		
APP		SPACE SHUTTLE	DWG NO 2.4
CADS J. K. Kimbler	6.13.96	ALL	
LTR E PCN		121 X 34	PAGE SHEET 3 OF 3

BASIC REV E-6

R Q P O N M L K J I

V37K2003Y PF 2 — PBD OPER ENABLE CMD 2B
V37K2002Y PF 2 — PBD OPER ENABLE CMD 2A
V37K2004Y PF 1 — PBD OPER ENABLE CMD 3B
V37K2005Y PF 1 — PBD OPER ENABLE CMD 3A
V37K2009Y PF 2 — PBD OPER ENABLE CMD 5B
V37K2008Y PF 2 — PBD OPER ENABLE CMD 5A
V37K2011Y PF 2 — PBD OPER ENABLE CMD 6B
V37K2010Y PF 2 — PBD OPER ENABLE CMD 6A

V_{AC3} MMC2 — 30 — V_{AC3PBD} MMC2 — V_{AC3PBM} MMC2
V_{AC2} MMC2 — 30 — V_{AC2PBD} MMC2 — V_{AC2PBM} MMC2
V_{AC2} MMC4 — 30 — V_{AC2PBD} MMC4 — V_{AC2PBM} MMC4
V_{AC3} MMC4 — 30 — V_{AC3PBD} MMC4 — V_{AC3PBM} MMC4

V_{MNC} MPC3 — RPC 5A 10
V_{MNB} MPC2 — RPC 5A 10
V_{MNC} MPC3 — RPC 5A 11
V_{MNB} MPC2 — RPC 5A 23

V_{MNC} MMC2 — V_{MNB} MMC2 — V_{MNC} MMC4 — V_{MNB} MMC4

V_{PRFLT1} MMC2&CRY01&4
V_{PRFLT2} MMC4&CRY02&3

FROM PBD ENABLE SYS 1 — U73 — 9
FROM PBD ENABLE SYS 1 — U73 — 8
FROM PBD ENABLE SYS 2 — U72 — 11
FROM PBD ENABLE SYS 2 — U71 — 12

F7 2A — TO KU BAND ANT A 30 DEG DEPLOY LIMIT SW 1 (PWR FOR V54X0001E AND HI VOLT ENABLE)
F3 2A — TO KU BAND ANT A 30 DEG DEPLOY LIMIT SW 2 (POWER FOR V54X0002E)

PBM POWER ON SYS 2 — H4 2.4-2 — 2 CNTLBC1 — 1 CNTLBC2
PBM POWER ON SYS 2 — H5 2.4-2 — 3 CNTLAB1/CA1 — 4 CNTLAB2/CA2

K42 K54 K61 K63 K39 K37 K58 K56 K41 K29 K49 K61 K20 K8 K30 K42

V76 X21136 0A2 N/A — AC3PBM/PBD MMC2 BUS ENABLE 1 — 1=DISABLE 1 S/S
V76 X21174 0A2 N/A — AC3PBM/PBD MMC2 BUS ENABLE 2 — 1=DISABLE 1 S/S
V76 X21172 0A2 N/A — AC2PBM/PBD MMC2 BUS ENABLE 1 — 1=DISABLE 1 S/S
V76 X21171 0A2 N/A — AC2PBM/PBD MMC2 BUS ENABLE 2 — 1=DISABLE 1 S/S
V76 X21191 0A1 N/A — AC2PBM/PBD MMC4 BUS ENABLE 1 — 1=DISABLE 1 S/S
V76 X21192 0A1 N/A — AC2PBM/PBD MMC4 BUS ENABLE 2 — 1=DISABLE 1 S/S
V76 X21193 0A1 N/A — AC3PBM/PBD MMC4 BUS ENABLE 1 — 1=DISABLE 1 S/S
V76 X21194 0A1 N/A — AC3PBM/PBD MMC4 BUS ENABLE 2 — 1=DISABLE 1 S/S

30 MOTOR POWER — RLY LOGIC POWER — 5.1K

VENT DOORS
LEFT NO 3 MOTOR 1 — Z7 15.1-2 — K31 OPN B, K33 CLS B, K45 OPN A, K35 CLS A
RIGHT NO 4/7 MOTOR 1 — Z7 15.1-2 — K40 OPN B, K28 CLS B, K26 OPN A, K30 CLS A
LEFT NO 6 MOTOR 2 — Z7 15.1-3 — K5 OPN B, K3 CLS B, K15 OPN A, K1 CLS A

VENT DOOR
LEFT NO 3 MOTOR 2 — Z7 15.1-2 — K32 OPN B, K34 CLS B, K46 OPN A, K36 CLS A

VENT DOORS
LEFT NO 3 MOTOR 2 — Z7 15.1-2 — K9 CLS A, K21 CLS B, K11 OPN A, K23 OPN B
RIGHT NO 4/7 MOTOR 2 — Z7 15.1-2 — K1 OPN A, K13 OPN B, K3 CLS A, K15 CLS B

VENT DOORS
RIGHT NO 3 MOTOR 2 — Z7 15.1-2 — K79 CLS A, K77 CLS B, K73 OPN A, K75 OPN B
RIGHT NO 5 MOTOR 2 — Z7 15.1-2 — K14 OPN A, K16 OPN B, K18 CLS A, K6 CLS B

PAYLOAD BAY DOORS
PORT AFT BKHD LATCH MOTOR 2 — Z2 14.2-1 — K19 REL, K7 LCH
℄ 1-4 LATCH MOTOR 2 — Z6 14.2-1 — K50 REL, K38 LCH
℄ 5-8 LATCH MOTOR 2 — Z6 14.2-1 — K4 REL, K6 LCH

PAYLOAD BAY DOORS
PORT PDU MOTOR 2 — Z3 14.2-1 — K12 CLS, K10 OPN
STBD AFT BKHD LATCH MOTOR 2 — Z2 14.2-1 — K25 REL, K13 LCH
℄ 9-12 LATCH MOTOR 2 — Z2 14.2-1 — K9 LCH, K21 REL
℄ 13-16 LATCH MOTOR 2 — Z2 14.2-1 — K34 CLS B, K36 CLS A

PAYLOAD BAY DOORS
STBD PDU MOTOR 2 — J3 14.2-1 — K43 OPN, K31 CLS
STBD FWD BKHD LATCH MOTOR 2 — Z6 14.2-1 — K33 LCH, K45 REL
STBD FWD BKHD LATCH MOTOR 2 — Z6 14.2-1 — K35 LCH, K47 REL

PAYLOAD BAY DOORS
PORT PDU MOTOR 1 — Z5 14.2-1 — K22 OPN, K10 CLS
STBD AFT BKHD LATCH MOTOR 1 — Z3 14.2-1 — K26 LCH, K12 LCH, K24 REL
℄ 9-12 LATCH MOTOR 2 — Z2 14.2-1 — K40 REL, K28 LCH, K38 REL
℄ 13-16 LATCH MOTOR 1 — Z3 14.2-1 — K14 OPN A, K16 OPN B, K18 CLS A, K6 CLS B

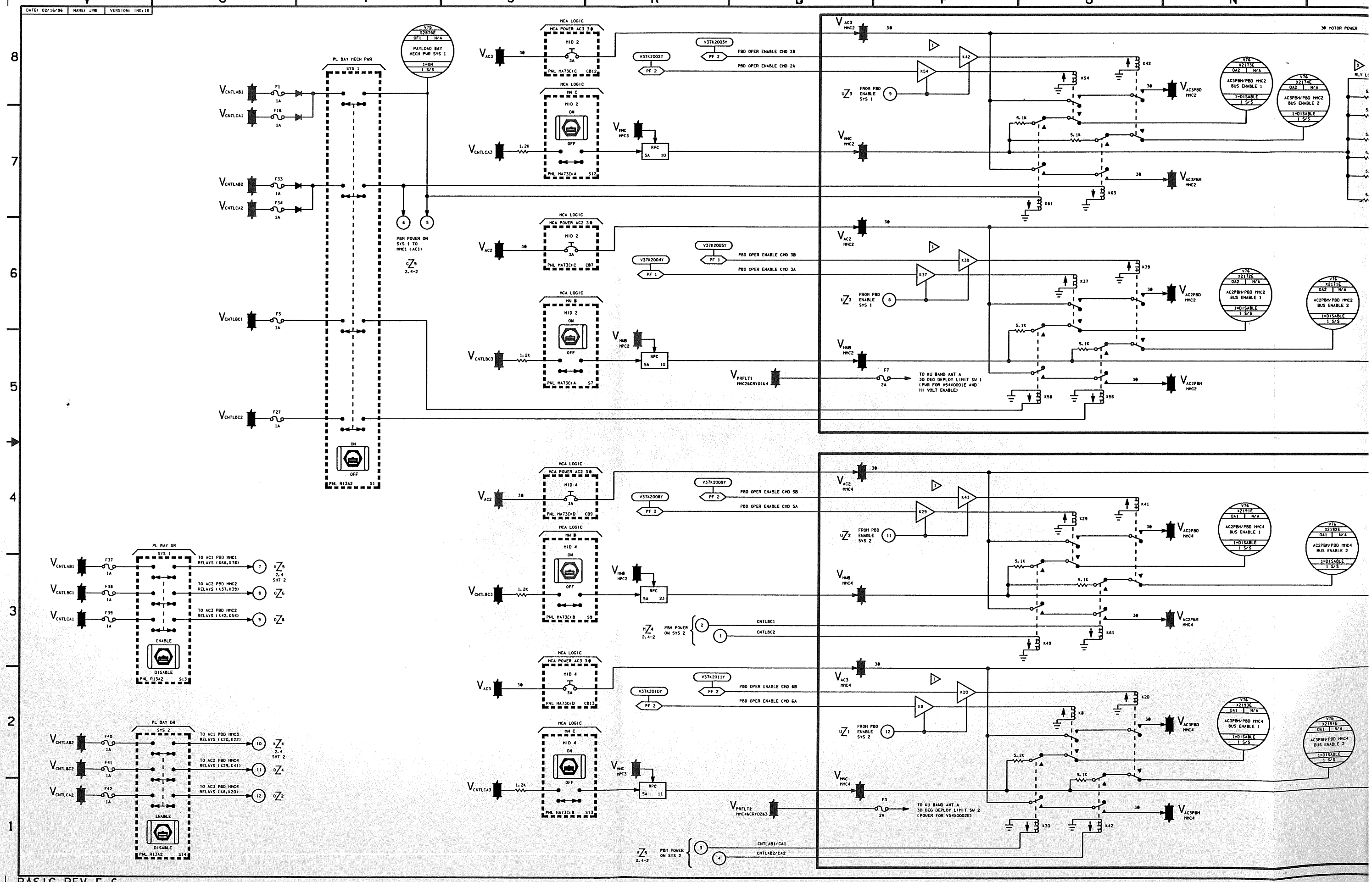

DATE: 02/16/96
NAME: JMB
VERSION: INK:18
PL BAY MECH PWR
SYS 1
PAYLOAD BAY MECH PWR SYS 1
PBM POWER ON SYS 1 TO MMC1 (AC1)
MCA LOGIC
MCA POWER AC3 30
MCA POWER AC2 30
MID 2
MID 4
PNL MA73C:C
PNL MA73C:A
PNL MA73C:D
PNL MA73C:B
PNL R13A2
PL BAY DR
SYS 2
ENABLE
DISABLE
TO AC1 PBD MMC1 RELAYS (K66,K78)
TO AC2 PBD MMC2 RELAYS (K37,K39)
TO AC3 PBD MMC2 RELAYS (K42,K54)
TO AC1 PBD MMC3 RELAYS (K20,K22)
TO AC2 PBD MMC4 RELAYS (K29,K41)
TO AC3 PBD MMC4 RELAYS (K8,K20)
PBD OPER ENABLE CMD 2B
PBD OPER ENABLE CMD 2A
PBD OPER ENABLE CMD 3B
PBD OPER ENABLE CMD 3A
PBD OPER ENABLE CMD 5B
PBD OPER ENABLE CMD 5A
PBD OPER ENABLE CMD 6B
PBD OPER ENABLE CMD 6A
FROM PBD ENABLE SYS 1
FROM PBD ENABLE SYS 2
TO KU BAND ANT A 30 DEG DEPLOY LIMIT SW 1 (PWR FOR V54X0001E AND HI VOLT ENABLE)
TO KU BAND ANT A 30 DEG DEPLOY LIMIT SW 2 (POWER FOR V54X0002E)
PBM POWER ON SYS 2
CNTLBC1
CNTLBC2
CNTLAB1/CA1
CNTLAB2/CA2
30 MOTOR POWER

BASIC REV E-6

DATE: 08/28/90	NAME: BJT	VERSION: BPT1
DATE: 08/28/90	NAME: MFB	VERSION: INH1
DATE: 10/04/90	NAME: BJT	VERSION: INH2

ORBITER | PALLET

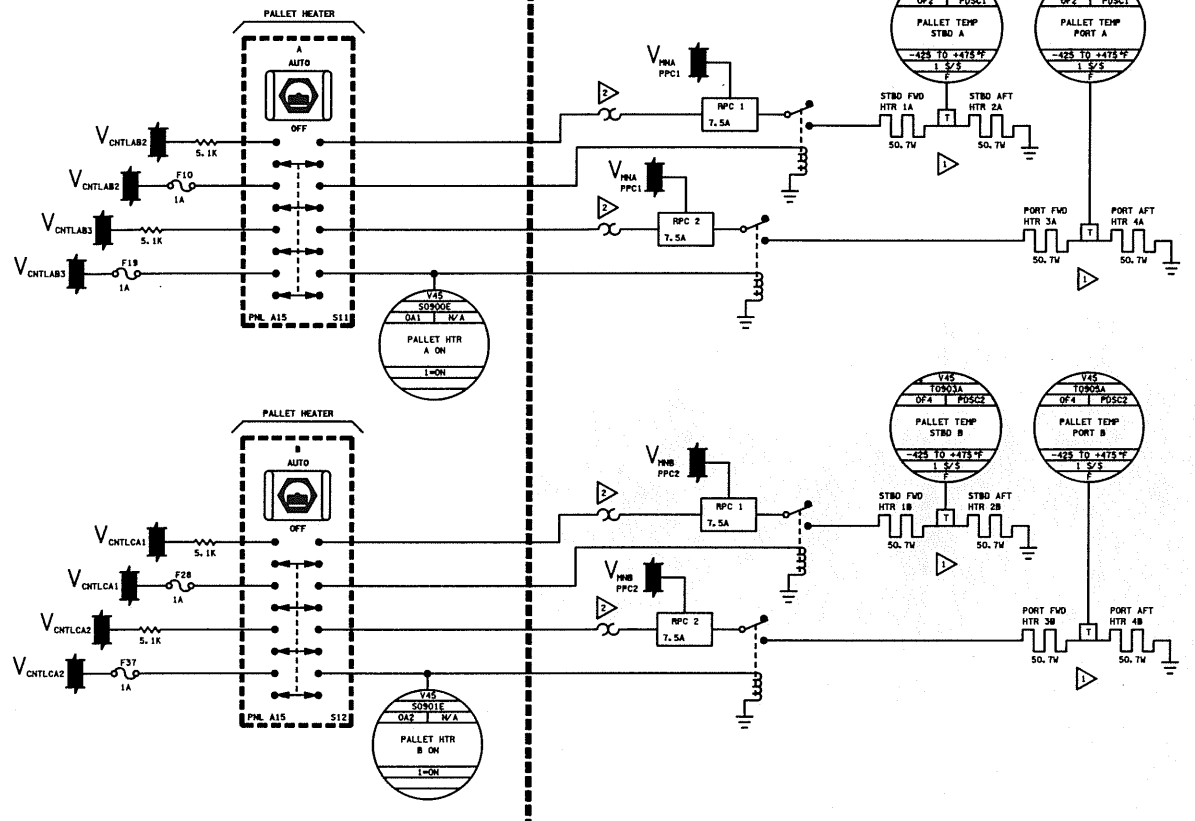

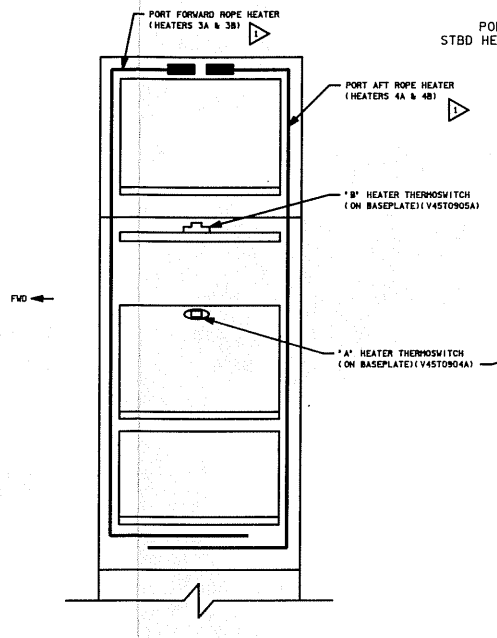

VIEW OF UPPER PALLET PORT SIDE
LOOKING INBOARD
(BASEPLATES SHOWN - NOT TO SCALE)

PORT HEATER INSTALLATION SHOWN,
STBD HEATER INSTALLATION IS MIRROR IMAGE

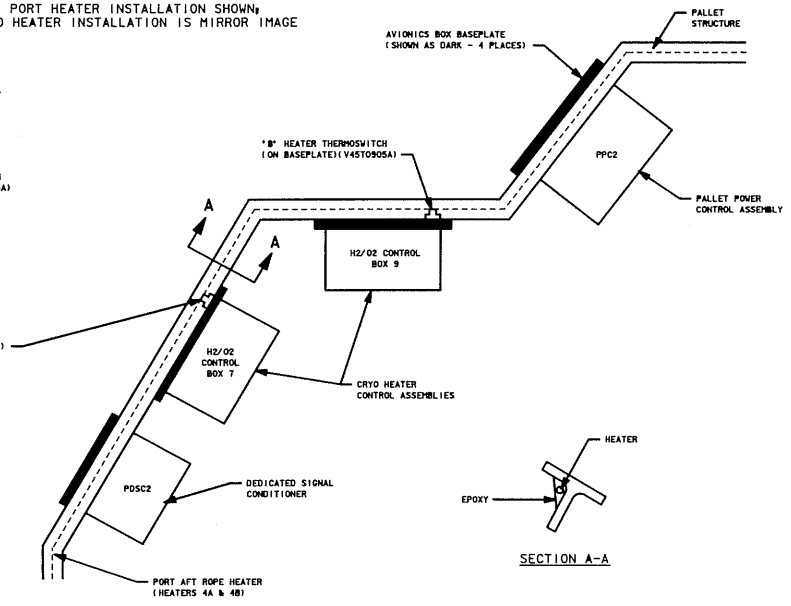

VIEW OF UPPER PALLET PORT SIDE
LOOKING FORWARD
(NOT TO SCALE)

PALLET HEATERS

ORBITER | PALLET

PALLET EPDC

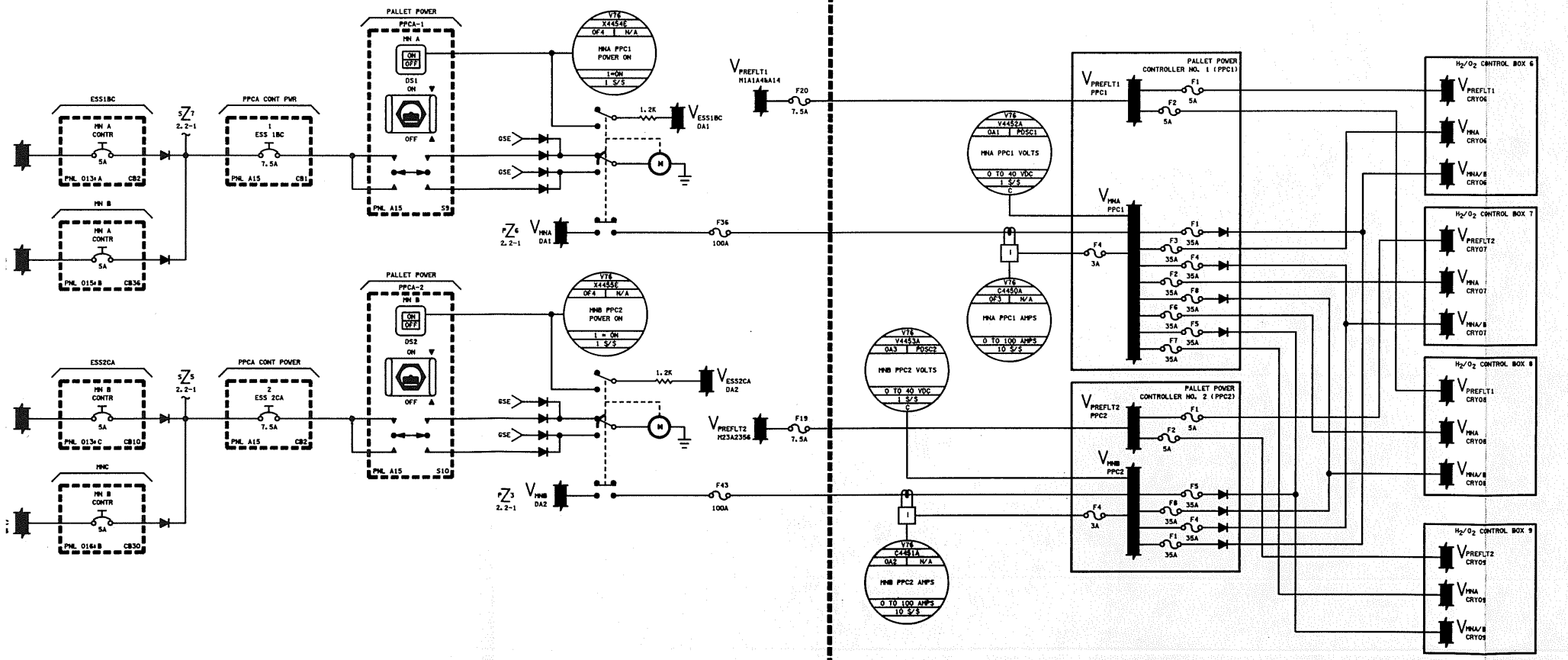

3. REFER TO TABLE 2.1 FOR DRAWING TRACEABILITY

▷2 THERMOSWITCH OPERATING RANGE:
CLOSES AT -30±5°F
OPENS AT -10±5°F
REQUIRED TO MAINTAIN AVIONICS BASEPLATE TEMPERATURES
BETWEEN -45°F AND 130°F

NOTES: ▷1 EACH HEATER IS 50.7 WATTS AT 27.5 VDC. EACH ROPE HEATER CONTAINS BOTH A & B HEATERS AND IS 160 INCHES LONG

5 EDO EPDC/HTR

SIGNATURE		DATE	NATIONAL AERONAUTICS AND SPACE ADMINISTRATION LYNDON B. JOHNSON SPACE CENTER HOUSTON, TEXAS
DSGN	MICHAEL A. GILLESPIE	08/16/90	
DR	MICHAEL A. GILLESPIE	08/16/90	
ENGR	LARRY MINTER		EDO PALLET EPDC/HEATERS
ENGR			
APP			
APP			SPACE SHUTTLE DWG NO 2.5
CHNG PLAN	S.K. Kimbrell 11-6-90		EDO: OV102, OV105
LTR E	PCN		66 X 34 PAPER SHEET 1 OF 1

BASIC REV E

L K J I H G F E D

8 7 6 5 4 3 2 1

ORBITER | PALLET

PALLET HEATERS

PALLET EPDC

ORBITER | PALLET

BASIC REV E

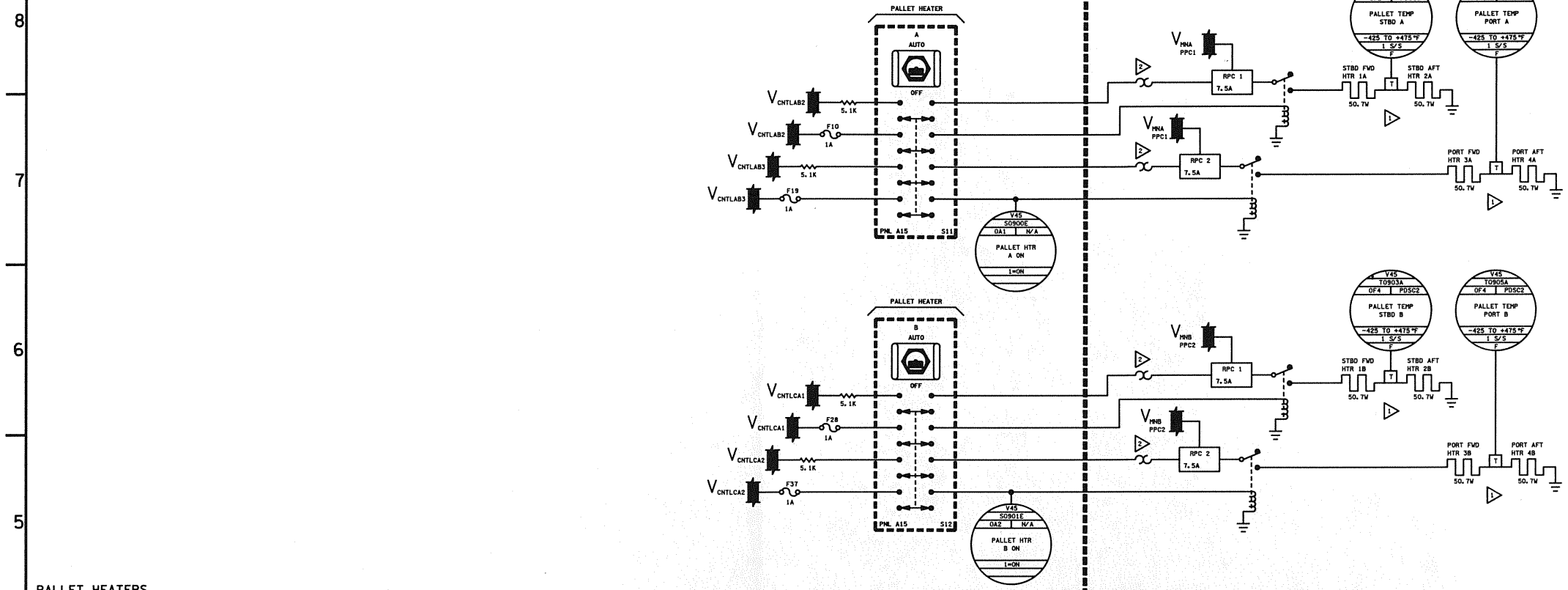

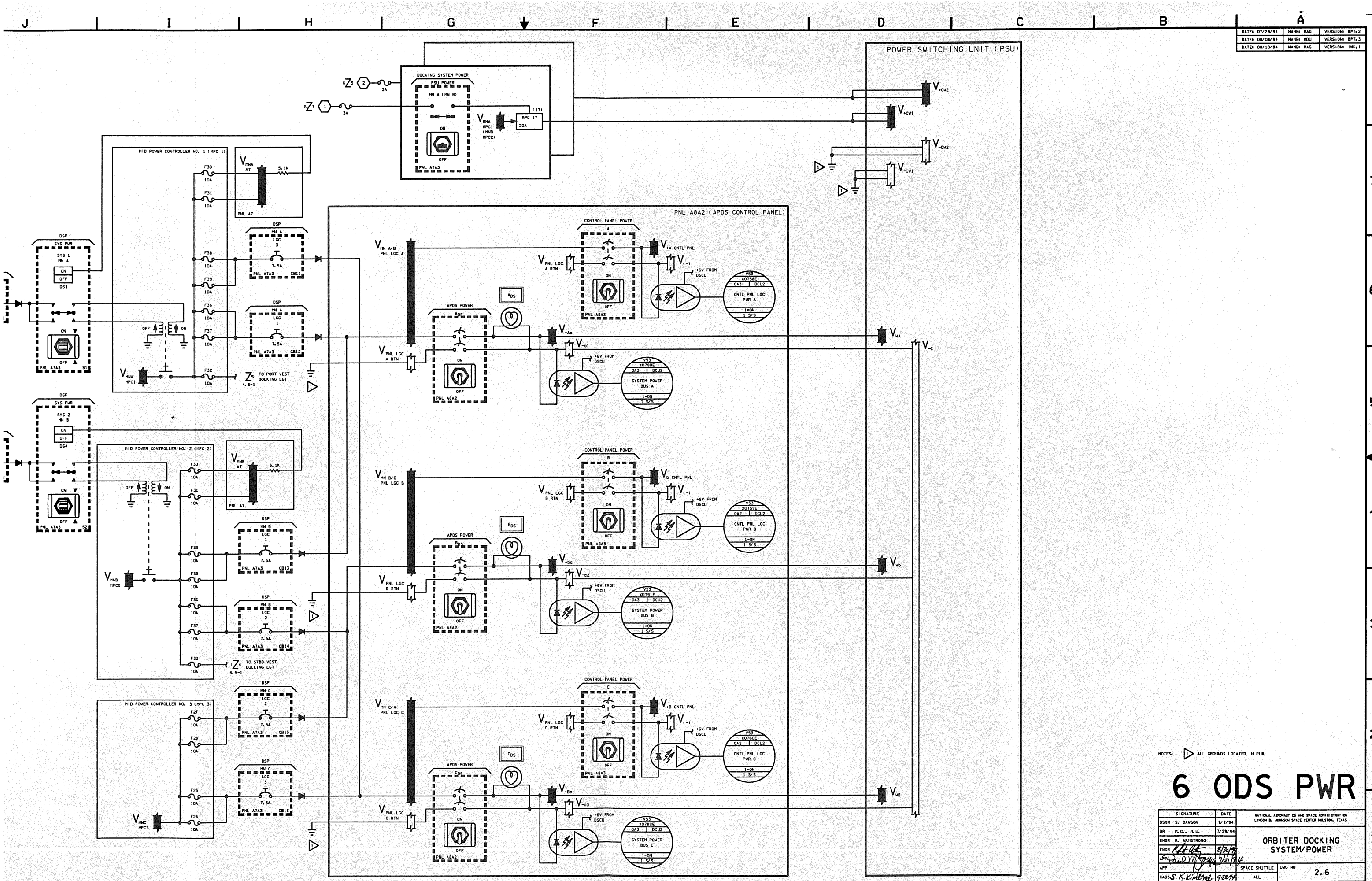

DATE: 07/29/94	NAME: MAG	VERSION: BPT: 2
DATE: 08/08/94	NAME: MDU	VERSION: BPT: 3
DATE: 08/10/94	NAME: MAG	VERSION: INK: 1

NOTES: 1 ALL GROUNDS LOCATED IN PLB

6 ODS PWR

SIGNATURE	DATE	NATIONAL AERONAUTICS AND SPACE ADMINISTRATION LYNDON B. JOHNSON SPACE CENTER HOUSTON, TEXAS
DSGN S. DAWSON	7/7/94	
DR M.G., M.U.	7/29/94	ORBITER DOCKING SYSTEM/POWER
ENGR R. ARMSTRONG		
ENGR [signature]	8/30/94	
APP [signature]	9/21/94	
APP [signature]		SPACE SHUTTLE ALL
CADS S. K. Kimbrel	9-22-94	DWG NO 2.6
LTR E PCN 4		66 X 34 PAGE SHEET 1 OF 1

BASIC REV E-4

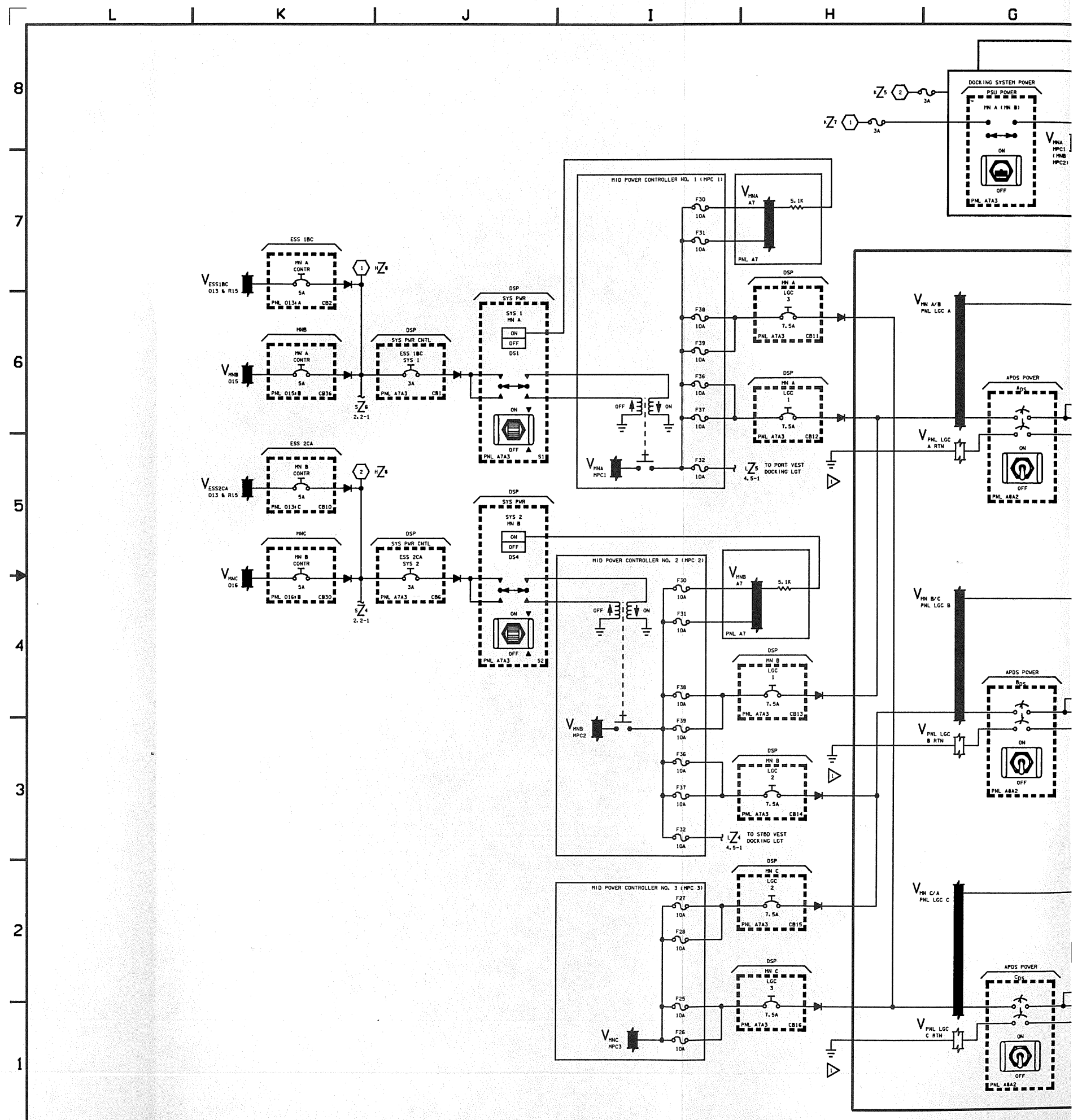

L
K
J
I
H
G
8
7
6
5
4
3
2
1
DOCKING SYSTEM POWER
PSU POWER
MID POWER CONTROLLER NO. 1 (MPC 1)
MID POWER CONTROLLER NO. 2 (MPC 2)
MID POWER CONTROLLER NO. 3 (MPC 3)
ESS 1BC
MNB
ESS 2CA
MNC
DSP
SYS PWR
SYS PWR CNTL
TO PORT VEST DOCKING LGT
TO STBD VEST DOCKING LGT
APDS POWER

BASIC REV E-4

DATE: 05/31/96	NAME: VSH	VERSION: BPT.2
DATE: 08/01/96	NAME: LAM	VERSION: INR.1
DATE: 08/05/96	NAME: VSH	VERSION: INR.2

CONV B

CONV A

APCU 2

INRUSH CURRENT LIMITER AND POWER INPUT RELAY

INPUT FILTER AND STORAGE CAPACITORS

.02Ω

2800μF

270μF

V_{28VF}

28VF RET

INTERNAL POWER SUPPLY

12V

+15V

-15V

28V

RET

ON

INRUSH RELAY DRIVE AND INPUT U/V LOCKOUT

15V

OFF

PWM

80 KHZ SQUARE WAVE
X% DUTY CYCLE FOR 140V OUT
X% DUTY CYCLE FOR 124V OUT

SD

12V

1ST STAGE DRIVER

2ND STAGE DRIVER

SNUBBER

PWR AMP STAGE

T_1

1:n

FULL WAVE RECTIFIER

OUTPUT FILTER

OUTPUT CURRENT SENSING

140V OUT

140V RET

CURRENT SENSING AND FEEDBACK

TRANSFORMER CURRENT FEEDBACK

VOLTAGE FEEDBACK

CURRENT LIMIT

R ADJ

HARD CURRENT LIMITER

CURRENT MEAS

START/RESET

OUTPUT O/V

OUTPUT U/V

OVERCURRENT TIMER

CURRENT SHARE CIRCUIT

SHARE BUS

A CONV SHARE

B CONV 140V OUT

B CONV RET

OUTPUT EMI FILTER

TO B CONV SHARE CIRCUIT

TO APCU 1 SHARE BUS IF REQUIRED

NC

SHUTDOWN LATCH

SET/ SHUTDOWN

RESET

CONV A HTRS

CONVERTER A HEATER DRIVERS

OUTPUT RELAY DRIVE

ILIM ALL B NC

ILIM ALL A NC

NC

NC

PF2 APCU 2 OUTPUT VOLTS HI RES 120 TO 145V

PF2 APCU 2 OUTPUT VOLTS LO RES 0 TO 200V

PF2 APCU 2 TEMP A

PF2 APCU 2 TEMP B

PF2 APCU 2 CONV A CURRENT

PF2 APCU 2 CONV B CURRENT

J1

J6

A

B

C

D

E

OUTPUT CONFIGURATIONS

CONFIG A

CONFIG B

CONFIG C

CONFIG D

CONFIG E

APCU 1

APCU 2

124V

140V

PSL

PSH

J1

J5

J6

ONE 8 GA FEED

TWO 8 GA FEEDS TO APAS

ONE 8 GA FEED TO OREU

JUMPER TIES OUTPUT BUSSES AND CURRENT SHARE BUSSES TOGETHER (5 WIRES TOTAL)

NC

1. THE TRIP STATUS VOLTAGE ENCODER PRODUCES AN ANLOG OUTPUT OF 16 DIFFERENT LEVELS TO INDICATE WHICH SENSOR TYPE PRODUCED THE SHUT-DOWN COMMAND. OUTPUT IS AS FOLLOWS:

TRIP CONDITIONS (X=TRIP)				OUTPUT VOLTAGE (VDC)
OV	OUV	OC	IUV	
X	X	X	X	+5.00
X	X	X		+4.34
X	X		X	+3.69
X	X			+3.03
X		X	X	+2.35
X		X		+1.69
X			X	+1.04
X				+0.38
	X	X	X	-0.24
	X	X		-0.91
	X		X	-1.55
	X			-2.22
		X	X	-2.89
		X		-3.56
			X	-4.20
				-4.86 (NO TRIP)

2. CONVERTER HEATERS ARE SWITCHED ON AT LOW OUTPUT CURRENT LEVELS TO ACT AS AN INTERNAL LOAD TO HELP MAINTAIN STABLE OUTPUT VOLTAGE LEVELS

3. THE SSP TALKBACKS ARE DRIVEN ON (GRAY) FOR APCU VOLTAGE >80 ± -VDC. ELSE THE TALKBACK REMAINS IN OFF (BARBERPOLE)

4. WITH PSL INSTALLED (NO JUMPER/OPEN CIRCUIT) FET IS TURNED ON CREATING A PATH TO GROUND FROM THE CONTROL CIRCUIT. GROUND IS USED TO REDUCE A RESISTOR VALUE IN A VOLTAGE DIVDER AND THUS LOWER THE CONTROL VOLTAGE GOING TO THE CIRCUIT. THIS SETS THE CONTROL CIRCUIT TO OPERATE AT A LOWER VOLTAGE (124 VDC MODE). WITH PSH INSTALLED (JUMPER/SHORT CIRCUIT) THE FET GATE IS PULLED TO GROUND TURNING THE FET OFF. WITH NO GROUND, THE VOLTAGE DIVIDER STAYS AT ITS INITIAL (HIGHER) VALUE AND THE CONTROL CIRCUIT OPERATES AT THE HIGHER VOLTAGE (140 VDC) MODE

VOLTAGE SELECT CIRCUIT (TYP)

CONTROL CIRCUIT

40.2K

80.6K

5. CURRENT SHARE CIRCUIT: CONVERTER WITH HIGHEST OUTPUT VOLTAGE WILL AUTOMATICALLY TAKE CONTROL BY OUTPUTING LARGEST CONTROL VOLTAGE ONTO THE SHARE BUS. SLAVE CURRENT SHARE CIRCUITS WILL READ THIS VOLTAGE AND COMPENSATE BY CHANGING THE VALUE OF THE ADJUST RESISTER AND DECREASING THE FEEDBACK VOLTAGE OF THE SLAVE CONVERTERS

6. HARD CURRENT LIMITER AND OVERCURRENT TIMER: CURRENT LIMIT FOR A MINIMUM OF 25 MILLISECONDS WHEN CONVERTER CURRENT EXCEEDS 14.7 AMPS. START OVERCURRENT TIMER WHEN CURRENT LIMITING BEGINS OR WHEN CONVERTER CURRENT EXCEEDS 35 AMPS. RESET THE TIMER IF CURRENT RETURNS TO LESS THAN 14.7 AMPS. OVERCURRENT TIMER ISSUES A SHUTDOWN DISCRETE AFTER TIMING UP TO BETWEEN 30 AND 60 MILLISECONDS WITHOUT RESETTING

7. OUTPUT UNDERVOLT PROTECTION: ISSUES A SHUTDOWN DISCRETE WITHIN 10 MILLISECONDS AFTER THE OUTPUT VOLTAGE DROPS BELOW 115 ± 2.5 VDC FOR 50 CONSECUTIVE MILLISECONDS. ISSUES A SHUTDOWN DISCRETE AT APCU START-UP, IF THE OUTPUT FAILS TO REACH 115 VDC WITHIN 100 MILLISECONDS AFTER THE OUTPUT VOLTAGE EXCEEDS 15 VDC

8. OUTPUT OVERVOLT PROTECTION: ISSUES A SHUTDOWN DISCRETE WITHIN 10 MICROSECONDS WHEN THE OUTPUT VOLTAGE EXCEEDS 178 ± 2 VDC (153 ± 2 VDC) OR WITHIN 10 (3 ± 1) MILLISECONDS WHEN THE OUTPUT VOLTAGE EXCEEDS 165 ± 2 VDC (130.5 ± 2.3 VDC) WHEN THE OUTPUT IS SET FOR 140 (124) VDC

9. SHUTDOWN LATCH REMOVES POWER FROM 1ST STAGE DRIVERS WHEN SHUTDOWN DISCRETE IS RECEIVED FROM PROTECTION CIRCUITY, OR IF INPUT POWER <20V. LATCH IS RESET WHEN POWER INPUT SWITCH IS CYCLED FROM OFF TO ON

1. INRUSH CURRENT LIMITER, LIMITS INRUSH WHEN PRI PL BUS IS FIRST CONNECTED TO ORBITER POWER

2. INPUT U/V LOCKOUT AND INRUSH RELAY DRIVE: CLOSES INPUT SURGE RELAY WHEN POWER ON DISCRETE RECEIVED. ISSUES STARTUP DISCRETE TO PWM WHEN 28VF EQUALS 28V INPUT, 28VF>24.5, POWER ON SWITCH IS CLOSED, SHUTDOWN LATCH NOT "SET", AND INPUT SURGE RELAY CLOSED

NOTES: 1. MOST TELEMETRY AND COMMAND CIRCUITS IN THE B CONVERTERS ARE NOT CONNECTED

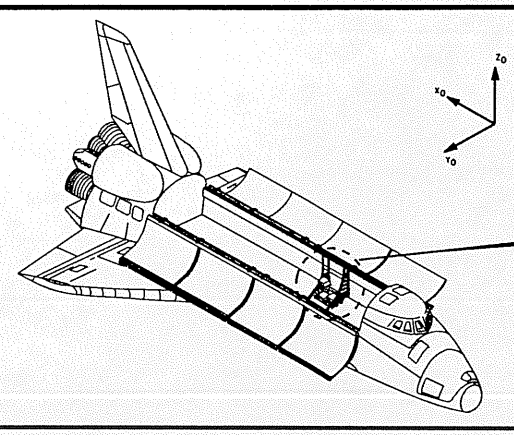

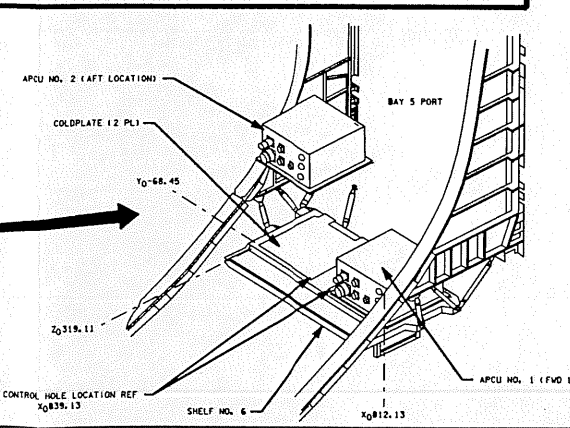

7 APCU

SIGNATURE		DATE
DSGN V. HUNTER		8-96
DR		
ENGR M. MAHER		
ENGR		
APP		
APP		
CHK		

NATIONAL AERONAUTICS AND SPACE ADMINISTRATION
LYNDON B. JOHNSON SPACE CENTER HOUSTON, TEXAS

ASSEMBLY POWER CONVERTER UNIT (APCU)

LTR E	PCN 6	126.5 X 34	SPACE SHUTTLE	ALL	DWG NO 2.7	PAGE	SHEET 1 OF 1

PRELIMINARY

BASIC REV E-6

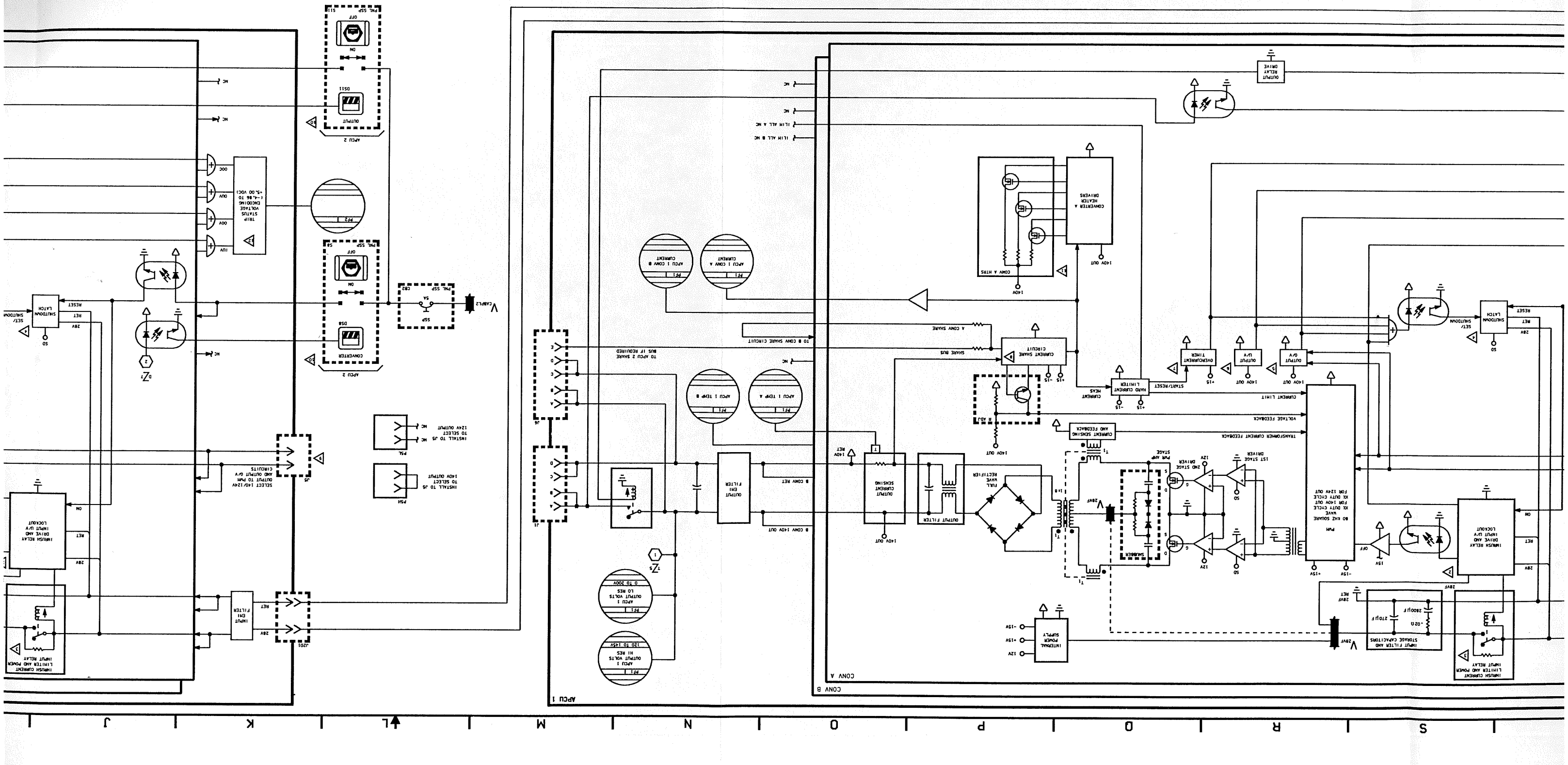
APCU 1
APCU 2
CONV A
CONV B
CONVERTER A HEATER DRIVERS
CONV A HTRS
140V OUT
APCU 1 CONV A CURRENT
APCU 1 CONV B CURRENT
APCU 1 TEMP A
APCU 1 TEMP B
A CONV SHARE
TO B CONV SHARE CIRCUIT
SHARE BUS
CURRENT SHARE CIRCUIT
CURRENT LIMIT
VOLTAGE FEEDBACK
TRANSFORMER CURRENT FEEDBACK
CURRENT SENSING AND FEEDBACK
HARD CURRENT LIMITER
START/RESET
OVERCURRENT TIMER
OUTPUT U/V
OUTPUT O/V
OUTPUT RELAY DRIVE
SHUTDOWN LATCH
SET/ SHUTDOWN
RESET
RET
28V
SO
ON
OFF
INRUSH RELAY DRIVE AND INPUT U/V LOCKOUT
INRUSH CURRENT LIMITER AND POWER INPUT RELAY
INPUT FILTER AND STORAGE CAPACITORS
.02Ω
2700µF
270µF
INTERNAL POWER SUPPLY
-15V
+15V
12V
15V
PWM
80 KHZ SQUARE WAVE
XX DUTY CYCLE FOR 140V OUT
XX DUTY CYCLE FOR 12V OUT
1ST STAGE DRIVER
2ND STAGE DRIVER
PWM AMP STAGE
SWAGGER
FULL RECTIFIER VAVE
OUTPUT FILTER
OUTPUT CHOKE
OUTPUT SENSING
OUTPUT FILTER CHI
INPUT FILTER
INPUT CHI
TRIP STATUS VOLTAGE CHOOSING 1.4, 66 TO +5.00 VDC
SELECT 140/12V OUTPUT TO PWM AND OUTPUT O/V CIRCUITS
INSTALL TO SELECT 140V OUTPUT
INSTALL TO SELECT 12V OUTPUT
APCU 1 OUTPUT VOLTS LO RES 0 TO 200V
APCU 1 OUTPUT VOLTS HI RES 120 TO 145V
APCU 1 CONV B SHARE BUS IF REQUIRED
TO APCU 2 SHARE BUS IF REQUIRED
OUTPUT
PWL SSP
SSP
CONVERTER
DS11
DS8
DS9
S1
S1A
S1B
S2
S3
S4
S5
S6
CAP1
CAP2
J1
J2
J3
J4
J5
J6
J7
J8
J9
J10
P1
P2
P3
P4
P5
P6
P7
P8
P9
P10
P11
P12
P13
P14
P15
P16
P17
P18
P19
P20
P21
P22
P23
P24
P25
P26
P27
P28
P29
P30
P31
P32
P33
P34
P35
P36
P37
P38
P39
P40
P41
P42
P43
P44
P45
P46
P47
P48
P49
P50
P51
P52
P53
P54
P55
P56
P57
P58
P59
P60
P61
P62
P63
P64
P65
P66
P67
P68
P69
P70
P71
P72
P73
P74
P75
P76
P77
P78
P79
P80
P81
P82
P83
P84
P85
P86
P87
P88
P89
P90
P91
P92
P93
P94
P95
P96
P97
P98
P99
P100
P101
P102
P103
P104
P105
P106
P107
P108
P109
P110
P111
P112
P113
P114
P115
P116
P117
P118
P119
P120
P121
P122
P123
P124
P125
P126
P127
P128
P129
P130
P131
P132
P133
P134
P135
P136
P137
P138
P139
P140
P141
P142
P143
P144
P145
P146
P147
P148
P149
P150
P151
P152
P153
P154
P155
P156
P157
P158
P159
P160
P161
P162
P163
P164
P165
P166
P167
P168
P169
P170
P171
P172
P173
P174
P175
P176
P177
P178
P179
P180
P181
P182
P183
P184
P185
P186
P187
P188
P189
P190
P191
P192
P193
P194
P195
P196
P197
P198
P199
P200
P201
P202
P203
P204
P205
P206
P207
P208
P209
P210
P211
P212
P213
P214
P215
P216
P217
P218
P219
P220
P221
P222
P223
P224
P225
P226
P227
P228
P229
P230
P231
P232
P233
P234
P235
P236
P237
P238
P239
P240
P241
P242
P243
P244
P245
P246
P247
P248
P249
P250
P251
P252
P253
P254
P255
P256
P257
P258
P259
P260
P261
P262
P263
P264
P265
P266
P267
P268
P269
P270
P271
P272
P273
P274
P275
P276
P277
P278
P279
P280
P281
P282
P283
P284
P285
P286
P287
P288
P289
P290
P291
P292
P293
P294
P295
P296
P297
P298
P299
P300
P301
P302
P303
P304
P305
P306
P307
P308
P309
P310
P311
P312
P313
P314
P315
P316
P317
P318
P319
P320
P321
P322
P323
P324
P325
P326
P327
P328
P329
P330
P331
P332
P333
P334
P335
P336
P337
P338
P339
P340
P341
P342
P343
P344
P345
P346
P347
P348
P349
P350
P351
P352
P353
P354
P355
P356
P357
P358
P359
P360
P361
P362
P363
P364
P365
P366
P367
P368
P369
P370
P371
P372
P373
P374
P375
P376
P377
P378
P379
P380
P381
P382
P383
P384
P385
P386
P387
P388
P389
P390
P391
P392
P393
P394
P395
P396
P397
P398
P399
P400
P401
P402
P403
P404
P405
P406
P407
P408
P409
P410
P411
P412
P413
P414
P415
P416
P417
P418
P419
P420
P421
P422
P423
P424
P425
P426
P427
P428
P429
P430
P431
P432
P433
P434
P435
P436
P437
P438
P439
P440
P441
P442
P443
P444
P445
P446
P447
P448
P449
P450
P451
P452
P453
P454
P455
P456
P457
P458
P459
P460
P461
P462
P463
P464
P465
P466
P467
P468
P469
P470
P471
P472
P473
P474
P475
P476
P477
P478
P479
P480
P481
P482
P483
P484
P485
P486
P487
P488
P489
P490
P491
P492
P493
P494
P495
P496
P497
P498
P499
P500
P501
P502
P503
P504
P505
P506
P507
P508
P509
P510
P511
P512
P513
P514
P515
P516
P517
P518
P519
P520
P521
P522
P523
P524
P525
P526
P527
P528
P529
P530
P531
P532
P533
P534
P535
P536
P537
P538
P539
P540
P541
P542
P543
P544
P545
P546
P547
P548
P549
P550
P551
P552
P553
P554
P555
P556
P557
P558
P559
P560
P561
P562
P563
P564
P565
P566
P567
P568
P569
P570
P571
P572
P573
P574
P575
P576
P577
P578
P579
P580
P581
P582
P583
P584
P585
P586
P587
P588
P589
P590
P591
P592
P593
P594
P595
P596
P597
P598
P599
P600
P601
P602
P603
P604
P605
P606
P607
P608
P609
P610
P611
P612
P613
P614
P615
P616
P617
P618
P619
P620
P621
P622
P623
P624
P625
P626
P627
P628
P629
P630
P631
P632
P633
P634
P635
P636
P637
P638
P639
P640
P641
P642
P643
P644
P645
P646
P647
P648
P649
P650
P651
P652
P653
P654
P655
P656
P657
P658
P659
P660
P661
P662
P663
P664
P665
P666
P667
P668
P669
P670
P671
P672
P673
P674
P675
P676
P677
P678
P679
P680
P681
P682
P683
P684
P685
P686
P687
P688
P689
P690
P691
P692
P693
P694
P695
P696
P697
P698
P699
P700
P701
P702
P703
P704
P705
P706
P707
P708
P709
P710
P711
P712
P713
P714
P715
P716
P717
P718
P719
P720
P721
P722
P723
P724
P725
P726
P727
P728
P729
P730
P731
P732
P733
P734
P735
P736
P737
P738
P739
P740
P741
P742
P743
P744
P745
P746
P747
P748
P749
P750
P751
P752
P753
P754
P755
P756
P757
P758
P759
P760
P761
P762
P763
P764
P765
P766
P767
P768
P769
P770
P771
P772
P773
P774
P775
P776
P777
P778
P779
P780
P781
P782
P783
P784
P785
P786
P787
P788
P789
P790
P791
P792
P793
P794
P795
P796
P797
P798
P799
P800
P801
P802
P803
P804
P805
P806
P807
P808
P809
P810
P811
P812
P813
P814
P815
P816
P817
P818
P819
P820
P821
P822
P823
P824
P825
P826
P827
P828
P829
P830
P831
P832
P833
P834
P835
P836
P837
P838
P839
P840
P841
P842
P843
P844
P845
P846
P847
P848
P849
P850
P851
P852
P853
P854
P855
P856
P857
P858
P859
P860
P861
P862
P863
P864
P865
P866
P867
P868
P869
P870
P871
P872
P873
P874
P875
P876
P877
P878
P879
P880
P881
P882
P883
P884
P885
P886
P887
P888
P889
P890
P891
P892
P893
P894
P895
P896
P897
P898
P899
P900
P901
P902
P903
P904
P905
P906
P907
P908
P909
P910
P911
P912
P913
P914
P915
P916
P917
P918
P919
P920
P921
P922
P923
P924
P925
P926
P927
P928
P929
P930
P931
P932
P933
P934
P935
P936
P937
P938
P939
P940
P941
P942
P943
P944
P945
P946
P947
P948
P949
P950
P951
P952
P953
P954
P955
P956
P957
P958
P959
P960
P961
P962
P963
P964
P965
P966
P967
P968
P969
P970
P971
P972
P973
P974
P975
P976
P977
P978
P979
P980
P981
P982
P983
P984
P985
P986
P987
P988
P989
P990
P991
P992
P993
P994
P995
P996
P997
P998
P999
P1000

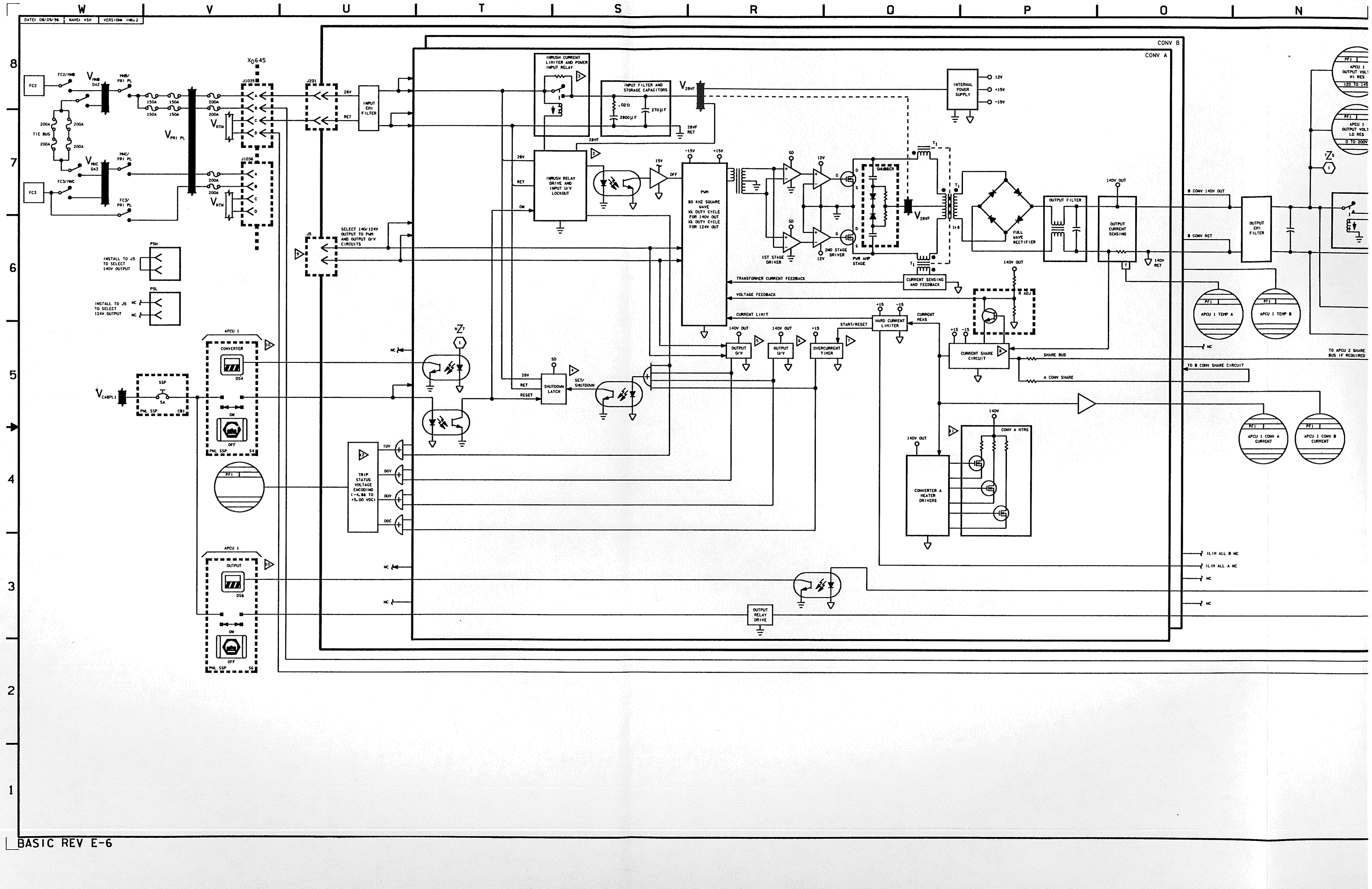

DATE: 08/09/96
NAME: VSH
VERSION: INK:2
CONV B
CONV A
INRUSH CURRENT LIMITER AND POWER INPUT RELAY
INPUT FILTER AND STORAGE CAPACITORS
INTERNAL POWER SUPPLY
INPUT EMI FILTER
INRUSH RELAY DRIVE AND INPUT U/V LOCKOUT
PWM
80 KHZ SQUARE WAVE
XX DUTY CYCLE FOR 140V OUT
XX DUTY CYCLE FOR 124V OUT
1ST STAGE DRIVER
2ND STAGE DRIVER
PWR AMP STAGE
SNUBBER
FULL WAVE RECTIFIER
OUTPUT FILTER
OUTPUT CURRENT SENSING
OUTPUT EMI FILTER
CURRENT SENSING AND FEEDBACK
TRANSFORMER CURRENT FEEDBACK
VOLTAGE FEEDBACK
CURRENT LIMIT
HARD CURRENT LIMITER
CURRENT MEAS
START/RESET
OUTPUT O/V
OUTPUT U/V
OVERCURRENT TIMER
CURRENT SHARE CIRCUIT
SHARE BUS
A CONV SHARE
SHUTDOWN LATCH
SET/SHUTDOWN
TRIP STATUS VOLTAGE ENCODING (-4.86 TO +5.00 VDC)
CONVERTER A HEATER DRIVERS
CONV A HTRS
OUTPUT RELAY DRIVE
INSTALL TO J5 TO SELECT 140V OUTPUT
INSTALL TO J5 TO SELECT 124V OUTPUT
SELECT 140/124V OUTPUT TO PWM AND OUTPUT O/V CIRCUITS
APCU 1 CONVERTER
APCU 1 OUTPUT
APCU 1 TEMP A
APCU 1 TEMP B
APCU 1 CONV A CURRENT
APCU 1 CONV B CURRENT
B CONV 140V OUT
B CONV RET
TO APCU 2 SHARE BUS IF REQUIRED
TO B CONV SHARE CIRCUIT
ILIM ALL B NC
ILIM ALL A NC

BASIC REV E-6

FOR DETAILED COMPONENT AND LOGIC INFORMATION REFER TO:

SSSH DWG NO.	SSSH DWG TITLE	VENDOR NAME	VENDOR DWG NO.	VENDOR SHEET NO.	REV	DATE	VENDOR DRAWING TITLE
2.1	EPS OV	R.I.	VS70-760322	1 - 14	E	11/21/88	MAIN DC POWER DIST SUBSYSTEM (OV-102)
		R. I.	VS70-760309	1-15	H	12/14/89	MAIN DC POWER DIST SUBSYSTEM
		R. I.	VS70-976099	ALL	A16	8/6/90	INTEGRATED SCHEMATIC - ELECTRICAL POWER DIST & CONTROL
		R. I.	VS70-976102	ALL	G19	9/14/90	INTEGRATED SCHEMATIC - ELECTRICAL POWER DIST & CONTROL (OV-102)
		R.I.	VS70-764345	5 OF 7	B	2/20/90	MID POWER CONTROL ASSEMBLY NO. 1
		R.I.	VS70-764355	5 OF 6	B	2/13/90	MID PWR CONTROL ASSEMBLY NO. 2, MID-FUSELAGE
2.2 (SHEET 1)	MAIN BUS DC DISTRIBUTION	R.I.	VS70-764345	5 OF 7	B	2/20/90	MID POWER CONTROL ASSEMBLY NO. 1
		R.I.	VS70-764355	5 OF 6	B	2/13/90	MID PWR CONTROL ASSEMBLY NO. 2, MID-FUSELAGE
		R.I.	VS70-953104	11 OF 55		5/13/94	INTEGRATED SCHEMATIC - ORBITER DOCKING SYSTEM (ODS), RUSSIAN MIR MISSION, OV-104
		R.I.	VS70-760309	1 - 14	H	12/14/89	MAIN DC POWER DISTRIBUTION SUBSYSTEM - OV-103, OV-104, OV-105
		R.I.	VS70-760322	1 - 14	E	11/21/88	MAIN DC POWER DISTRIBUTION SUBSYSTEM - OV-102
2.2 (SHEET 2)	MAIN BUS DC DISTRIBUTION	R.I.	VS70-760209	2 OF 3	D	11/13/84	COAS SEAT/SUIT CONTROLS CREW SYSTEMS - OV-103, OV-104, OV-105
		R.I.	VS70-760202	2 OF 3	G	1/14/83	COAS SEAT/SUIT CONTROLS CREW SYSTEMS - OV-102
		R.I.	VS70-760503	4 OF 14 5 OF 14 12 OF 14	D	11/10/89	EVCON SUBSYSTEM - OV-103, OV-104, OV-105
		R.I.	VS70-760502	4 OF 14 5 OF 14 12 OF 14	M	10/20/89	EVCON SUBSYSTEM - OV-102
		R.I.	VS70-710179	1 - 2	D	4/6/88	SOLID RKT BSTR RATE GYRO GDNC & NAV SUBSYSTEM - OV-103, OV-104, OV-105
		R.I.	VS70-710172	1 -2	G	5/18/87	SOLID RKT BSTR RATE GYRO GDNC & NAV SUBSYSTEM - OV-102
		R.I.	VS70-733619	1	B	10/31/89	SCHEMATIC DIAGRAM PANEL F9A2 MAIN DISPLAY CONSOLE
		R.I.	VS70-760809	20 OF 24	R	7/7/89	PAYLOAD SUBSYSTEM INTERFACE - ALL VEHICLE
2.2 (SHEET 3)	MAIN BUS DC DISTRIBUTION	JSC	SID39119180	1 OF 1	B	6/22/90	MID-DECK UTILITY PANEL
		R.I.	VS70-760202	2	G	1/14/83	COAS SEAT/SUIT CONTROL CREW SYSTEMS - OV-102
		R.I.	VS70-760209	2	D	11/13/84	COAS SEAT/SUIT CONTROLS CREW SYSTEMS - OV-103, OV-04, OV-105

DWG	SIGNATURE	DATE	DWG	SIGNATURE	DATE
2.1	ENGR J. AZBELL			ENGR	
	ENGR J. Azbell	9/22/94		ENGR	
2.2-1	ENGR R. AL-AYOUBI			ENGR	
	ENGR Rami Al-Ayoubi	9/22/94		ENGR	
2.2-2	ENGR R. AL-AYOUBI			APP Paul M Gay CL	9/22/94
	ENGR Rami Al-Ayoubi	9/22/94		APP	
2.2-3	ENGR R. AL-AYOUBI			APP	
	ENGR Rami Al-Ayoubi	9/22/94		LTR E PCN 4	

NATIONAL AERONAUTICS AND SPACE ADMINISTRATION
LYNDON B. JOHNSON SPACE CENTER HOUSTON, TEXAS

VENDOR DRAWING REFERENCES

SPACE SHUTTLE ALL | TBL NO 2-I | PAGE 2.I-1 | SHEET 1 OF 2

BASIC REV E-4

FOR DETAILED COMPONENT AND LOGIC INFORMATION REFER TO:

SSSH DWG NO.	SSSH DWG TITLE	VENDOR NAME	VENDOR DWG NO.	VENDOR SHEET NO.	REV	DATE	VENDOR DRAWING TITLE
2.3	AC GENERATION AND DISTRIBUTION	R. I.	VS70-760402	1-9	L	12/9/88	AC PWR DIST AND CONTROL - SUBSYSTEM
		R. I.	VS70-760409	1-9	D	1/19/89	AC PWR DIST AND CONTROL - SUBSYSTEM
		R.I.	VS70-760202	2	G	1/14/83	COAS, SEAT/SUIT CONTROLS CREW SYSTEMS OV-102
		R.I.	V070-760209	2	D	11/13/84	COAS, SEAT/SUIT CONTROLS CREW SYSTEMS OV-103, OV-104, OV-105
		WESTING-HOUSE ELECTRIC CORP.	947F480	—	A	10/22/75	INVERTER SCHEMATIC
		WESTING-HOUSE ELECTRIC CORP.	9009D37	—	A	10/22/75	CONTROL PWR SUPPLY AND ERC
		WESTING-HOUSE ELECTRIC CORP.	9009D36	—		4/8/75	CCFT STEERING CIRCUIT
		WESTING-HOUSE ELECTRIC CORP.	947F494	—		10/14/75	COMPARITOR SCHEMATIC
		WESTING-HOUSE ELECTRIC CORP.	947F493	—		10/27/75	SINE WAVE SCHEMATIC
2.4 (SHEETS 1-3)	MCA DISTRIBUTION	R.I..	VS70-540302	1 - 8	J	6/6/86	PAYLOAD BAY DOOR CONTS SUBSYSTEM
		R.I.	VS70-540309	1 - 8	E	6/6/86	PAYLOAD BAY DOOR CONTS SUBSYSTEM
		R.I.	VS70-760709	1 - 11	D	8/25/86	MOTOR CONTROL ASSY POWER DISTRIBUTION
		R.I.	VS70-760702	1 - 12	H	8/25/86	MOTOR CONTROL ASSY POWER DISTRIBUTION
		R.I.	VS70-590119	1 - 3	B	11/27/85	KU-BAND ANTENNA DEPLOYMENT
		R.I.	VS70-540304	1 - 5	C	10/28/87	PAYLOAD RETENTION SUBSYSTEM
2.5	PALLET EPDC/HEATERS	R. I.	ECN 105-0044	ALL	A4	1/23/90	PRSD MODS FOR THE 28-DAY MISSION EXTENSION KIT ON OV-105
		R. I.	VS70-945102	ALL	G	7/20/90	INTEGRATED SYSTEM SCHEMATIC ORBITER OV-102 EPS
		JSC	SCR90118	ALL	A	8/23/89	EDO SM MODIFICATIONS
2.6	ORBITER DOCKING SYSTEM/ POWER	R.I.	VS70-953104	1 - 10 OF 55		5/13/94	INTEGRATED SCHEMATIC - ORBITER DOCKING SYSTEM (ODS), RUSSIAN MIR MISSION, OV-104

DWG	SIGNATURE	DATE	DWG	SIGNATURE	DATE
2.3	ENGR J. AZBELL			ENGR	
	ENGR	9/22/94		ENGR	
2.4-1,2,3	ENGR C. B. GUDERIAN			ENGR	
	ENGR	9/22/94		ENGR	
2.5	ENGR L. MINTER			APP Paul M Joyce	9/22/94
	ENGR	9/22/94		APP	
2.6	ENGR R. ARMSTRONG			APP	
		9/22/94		LTR E PCN 4	

NATIONAL AERONAUTICS AND SPACE ADMINISTRATION
LYNDON B. JOHNSON SPACE CENTER HOUSTON, TEXAS

VENDOR DRAWING REFERENCES

SPACE SHUTTLE	TBL NO 2-1	
ALL	PAGE 2.I-2	SHEET 2 OF 2

BASIC REV E-4

DATE: 10/25/88	NAME: SEW	VERSION: INR: 7
DATE: 08/07/90	NAME: JMB	VERSION: BPT: 2
DATE: 09/19/90	NAME: MAC	VERSION: INR: 8

FUEL CELL 3

FUEL CELL 2

FUEL CELL 1

100 TO 120 PSIA

100 TO 120 PSIA

CRACK 69 PSIA

CRACK 67 PSIA

60 TO 62 PSIA

59 TO 60 PSIA

INTEGRATED DUAL GAS REGULATOR MODULE

AL FLOW CONTROL/ PURGE VALVE

"FC STACK"

H_2

C FC CURRENT

V FC VOLTS

H_2O CONDENSATE TRAP

FC H_2 PUMP MOTOR STATUS X

H_2 PUMP

PUMP RIM ASPIRATOR SUCTION LINE

H_2 PURGE VALVE NC

H_2O SEPARATOR

X FC1 PH STATUS

H_2O PRODUCTION
1.6 LB/HR AT 2 KW
5.7 LB/HR AT 7 KW
9.8 LB/HR AT 12 KW

POWER OUTPUT CONSTRAINTS
2 TO 7 KW CONTINUOUS
10 KW FOR 1 HR
12 KW FOR 15 MIN
(EVERY 3 HOURS)
16 KW FOR 15 MIN MAX
(CONTINGENCY)

FC O_2 PURGE LINE T

O_2 PURGE HTRS

QPC

MAN

O_2 OVBD PURGE VENT X_O = 640.9 Y = PORT

FC H_2 VENT LINE T1

H_2 PURGE HTRS

QPC

FC H_2 VENT LINE T2

MAN

H_2 OVBD PURGE VENT X_O = 640.9 Y = STBD

H_2O RELIEF VALVE PANEL

FC3 H_2O VENT VLV HTRS

FC2 H_2O VENT VLV HTRS

FC1 H_2O VENT VLV HTRS

FC3 H_2O RLF VLV T

FC2 H_2O RLF VLV T

FC1 H_2O RLF VLV T

FC1 H_2O LINE HTRS

FC1 PROD H_2O LINE T

FC2 H_2O LINE HTRS

FC2 PROD H_2O LINE T

FC3 H_2O LINE HTRS

FC3 PROD H_2O LINE T

H_2O LINE PH STATUS X

H_2O VENT LINE HTR B

H_2O VENT BARREL HTR B

H_2O VENT NOZZLE HTR B

FC H_2O RLF NOZZLE T B

H_2O OVBD RLF VENT X_O = 631.1 Y = STBD

H_2O VENT LINE HTR A

H_2O VENT BARREL HTR A

H_2O VENT NOZZLE HTR A

FC H_2O RLF LINE T

FC H_2O RLF NOZZLE T A

FC3 ALT H_2O LINE TEMP

OPEN 6-8 PSID

FC ALT H_2O LINE PRESS

TO ECLSS TK B Z5

FC2 ALT H_2O LINE TEMP

OPEN 6-8 PSID

FC1 ALT H_2O LINE TEMP

OPEN 6-8 PSID

576 BULKHEAD

TO VACUUM VENT

H_2 SEPARATOR

H_2 SEPARATOR

GSE FILL X_O = 463.0 Y = PORT

CRACK 1.5 PSID

CRACK 1.5 PSID

GALLEY POT H_2O SUPPLY OPEN X

SUPPLY H_2O INLET PRESS P

TO POTABLE H_2O DISPENSING PANEL

TK A INLET VLV OPEN X

TK B QTY Q

TK B INLET VLV OPEN X

TK B OULET VLV OPEN X

TK A QTY Q

TK A OUTLET VLV OPEN X

FZ3 FC ALT H_2O RELIEF

TK B INLET VLV OPEN X

CRACK 1.5 PSID

TK C INLET VLV OPEN X

TK C QTY Q

TK C OUTLET VLV OPEN X

TK D INLET VLV OPEN X

TK D QTY Q

TK D OUTLET VLV OPEN X

POTABLE H_2O TANKS
168.3 LB CAPACITY PER TANK
3.3 LB RESIDUAL
MAX FLOW 150 LB/HR FROM EACH TANK

SUPPLY H_2O XOVR VLV POS X

GSE DRAIN X_O = 463.0 Y = PORT

TO FLASH EVAPORATOR SYSTEM B WATER SUPPLY X

SUPPLY B ISOL VLV POS

TO FLASH EVAPORATOR SYSTEM A WATER SUPPPLY

TO AIRLOCK

POT DUMP LINE HTRS

POT DUMP LINE T 238 T

SUPPLY WATER DUMP NOZZLE HTRS

H_2O DUMP NOZ TEMP A T

POT H_2O DUMP NOZZLE X_O = 620.0 Y = PORT

SUP H_2O DUMP ISOL VLV POS X

POT H_2O DUMP VLV POS X

H_2O DUMP NOZ TEMP B T

CONTINGENCY H_2O CROSS-TIE

H_2 RELIEF PORT 1

H_2 CRYO TANK 2

H_2 CRYO TANK 4

H_2 CRYO TANK 5

H_2 RELIEF PORT 2

O_2 CRYO TANK 3

O_2 HORIZONTAL DRAIN

O_2 CRYO TANK 2

FUEL CELL 3

O_2 OVBD PURGE PORT

FC H_2O OVBD RELIEF VENT

FUEL CELL 2

O_2 GSE SUPPLY T-O UMBILICAL

USA

POTABLE H_2O TANKS AND WASTE TANK

576 BLK-HD

582 FR

636 FR

693 FR

750 FR

807 FR

863 FR

919 FR

979.5 FR

1040 FR

1090.33 FR

1119 FR

1140.67 FR

POTABLE H_2O AND WASTE LIQ DRAINS

FUEL CELL 1

WASTE AND H_2O DUMP PORTS

O_2 OVBD PURGE PORT

FC1,2,3 COOLANT FILL AND DRAIN PORTS

O_2 CRYO TANK 1

O_2 RELIEF PORT

H_2 CRYO TANKS 1 THROUGH 5 FILL AND VENT PORTS

O_2 CRYO TANKS 1 THROUGH 5 FILL AND VENT PORTS

O_2 CYRO TANK 4

H_2 CRYO TANK 3

O_2 CRYO TANK 5

H_2 HORIZONTAL DRAIN

H_2 CRYO TANK 1

H_2 GSE SUPPLY T-O UMBILICAL

11. SEE TABLE 3-1 FOR VENDOR DRAWING REFERENCES

12 SEE DRAWING 3.2 FOR DETAILS

8 SEE DRAWING 3.3 FOR DETAILS

9 SEE DRAWING 3.4 FOR DETAILS

7 SEE DRAWING 6.4 FOR DETAILS

6 H_2O VENT NOZZLE HTR A DISCONNECTED

NOTES:

5 5μ NOMINAL 12μ ABSOLUTE

3 CRACK 10005 PSIG RESEAT 980 PSIG

3 CRACK 975 PSIG RESEAT 950 PSIG

3 CRACK 302 PSIG RESEAT 290 PSIG

1 CRACK 290 PSIG RESEAT 285 PSIG

* 1 FC/REAC

SIGNATURE		DATE	NATIONAL AERONAUTICS AND SPACE ADMINISTRATION LYNDON B. JOHNSON SPACE CENTER HOUSTON, TEXAS
DSGN	VICKI DOGGETT	8/2/79	
DR			FUEL CELL/REACTANT STORAGE OVERVIEW
ENGR	S.R. HIRSHORN		
ENGR		10/5/90	
APP		10/5/90	
APP			SPACE SHUTTLE
CHK/PLAN			ALL
LTR E	PCN		126.5 X 34

DWG NO 3.1

PAGE SHEET 1 OF 2

BASIC REV E

T | S | R | Q | P | O | N | M | L | K | J

POWER OUTPUT CONSTRAINTS
2 TO 7 KW CONTINUOUS
16 KW FOR 15 MIN MAX
(EVERY 3 HOURS)
12 KW FOR 15 MIN
10 KW FOR 1 HR
(CONTINGENCY)

INTEGRATED DUAL GAS REGULATOR MODULE

O_2 PRESS 59 TO 60 PSIA
O_2 PRESS 60 TO 62 PSIA
DUAL FLOW CONTROL/ O_2 PURGE VALVE
100 TO 120 PSIA
100 TO 120 PSIA
CRACK 69 PSIA
15A
15A
O_2 PRESS
FC O_2 FLOW
FC H_2 FLOW
H_2 PRESS

O_2
H_2
CURRENT FC
VOLTS FC
FC COOLANT T
COOLANT INLET TEMP
FC COOLANT P
ACCUMULATOR
STACK COOLANT OUT TEMP
COOLANT OUTLET TEMP
"FC STACK"
STACK INLET TEMP CONTROL VLV
128 TO 154 PPH
SUSTAINING HEATER
STARTUP HEATER
CONDENSER
HOT PRE-MIX VLV
COLD PRE-MIX VLV
CONDR EXIT TEMP CONTROL VLV
CONDR EXIT T
75µL
FC COOLANT RETURN T
GSE FC40 DRAIN PORT X_O = 712.0 Y = PORT
FUEL CELL HEAT EXCHANGER
FREON COOLANT LOOP 2
FREON COOLANT LOOP 1
10qa
10qa
10qa
GSE FC40 FILL PORT X_O = 717.0 Y = PORT
HEAT REJECTION TO HX
AT 90°F COOLANT RETURN
4800 BTU/HR AT 2KW
12000 BTU/HR AT 7KW
25000 BTU/HR AT 12KW
FCP COOLANT PUMP ΔP ON
COOLANT MAX 1200 PPH
FC STARTUP BYPASS VALVE
FLOW CONTROL VALVE
STARTUP BYPASS VALVE

H_2 AND O_2 CONSUMPTION		
(EXCLUDING PURGE)		
PWR	H_2 (LB/HR)	O_2 (LB/HR)
2 KW	.1728	1.372
7 KW	.6335	5.033
12 KW	1.1450	9.072

FCI O_2
FCO O_2
FCI H_2
FCO H_2
FCI O_2 REAC VLV OPEN
FCO O_2 REAC VLV OPEN
O_2 VALVE MODULE 1
O_2 VALVE MODULE 2
O_2 PURGE VLV OPEN
O_2 PURGE VLV CLOSED
O_2 PURGE VLV
O_2 PURGE PORT X_O = 760.0 Y = PORT
REMOVED FROM OV102 AND OV105
O_2 MANF 1 VLV OPEN
O_2 MANF 1 P
O_2 MANF 2 VLV OPEN
O_2 MANF 2 P
O_2 GSE SUPPLY T-O UMBILICAL X_O = 1305 Y = STBD
O_2 HORIZONTAL DRAIN X_O = 743.0 Y = STBD
O_2 ECLSS 1 SPLY VLV OPEN
O_2 ECLSS 2 SPLY VLV OPEN
TO ECLSS
(GROUND ONLY)
H_2 VALVE MODULE 1
H_2 VALVE MODULE 2
FCI H_2 REAC VLV OPEN
FCO H_2 REAC VLV OPEN
H_2 MANF 1 VLV OPEN
H_2 MANF 1 P
H_2 MANF 2 VLV OPEN
H_2 MANF 2 P
H_2 GSE SUPPLY T-O UMBILICAL X_O = 1305 Y = PORT
H_2 HORIZONTAL DRAIN X_O = 905.0 Y = PORT
H_2 RELIEF PORT 1 X_O = 822.2 Y = STBD
H_2 RELIEF PORT 2 X_O = 990.0 Y = STBD
REMOVED FROM OV105
ADDED TO OV102 AND OV105
FROM O_2 TK5
FROM H_2 TK5
RELIEF VALVE/FILTER PACKAGE
O_2 TK 1 P
O_2 TK 2 P
O_2 TK 3 P
O_2 TK 4 P
O_2 TK 1 HTR CNTR P
O_2 TK 2 HTR CNTR P
O_2 TK 3 HTR CNTR P
O_2 TK 4 HTR CNTR P
H_2 TK 1 P
H_2 TK 2 P
H_2 TK 3 P
H_2 TK 4 P
H_2 TK 1 HTR CNTR P
H_2 TK 2 HTR CNTR P
H_2 TK 3 HTR CNTR P
H_2 TK 4 HTR CNTR P
TANK 1&2 PRESS 803 TO 854 PSIA
TANK 3&4 PRESS 832 TO 883 PSIA
TANK 1&2 PRESS 200 TO 226 PSIA
TANK 3&4 PRESS 217 TO 243 PSIA
O_2 TK 1 HTR ASSY 1 T
O_2 TK 2 HTR ASSY 1 T
O_2 TK 3 HTR ASSY 2T
O_2 TK 3 HTR ASSY 1 T
H_2 TK 4 HTR ASSY T
O_2 TK 1 P
O_2 TK 2 P
O_2 TK 3 P
H_2 TK 4 P
O_2 TK 3 QTY
O_2 TK 3 FLUID T
O_2 FILL TK3
H_2 TK 4 QTY
H_2 TK 4 FLUID T
H_2 FILL TK 4
O_2 VENT TK 3
O_2 VENT TK 2
O_2 VENT TK 1
H_2 VENT TK 2
H_2 VENT TK 1
O_2 TANK 3
O_2 TANK 2
H_2 TANK 4
H_2 TANK 2
3
2
4
2
B2 250W HEATERS
A2 250W HEATERS
B1 250W HEATERS
A1 250W HEATERS
100W HEATERS
VAC-ION PUMP
(GROUND ONLY)

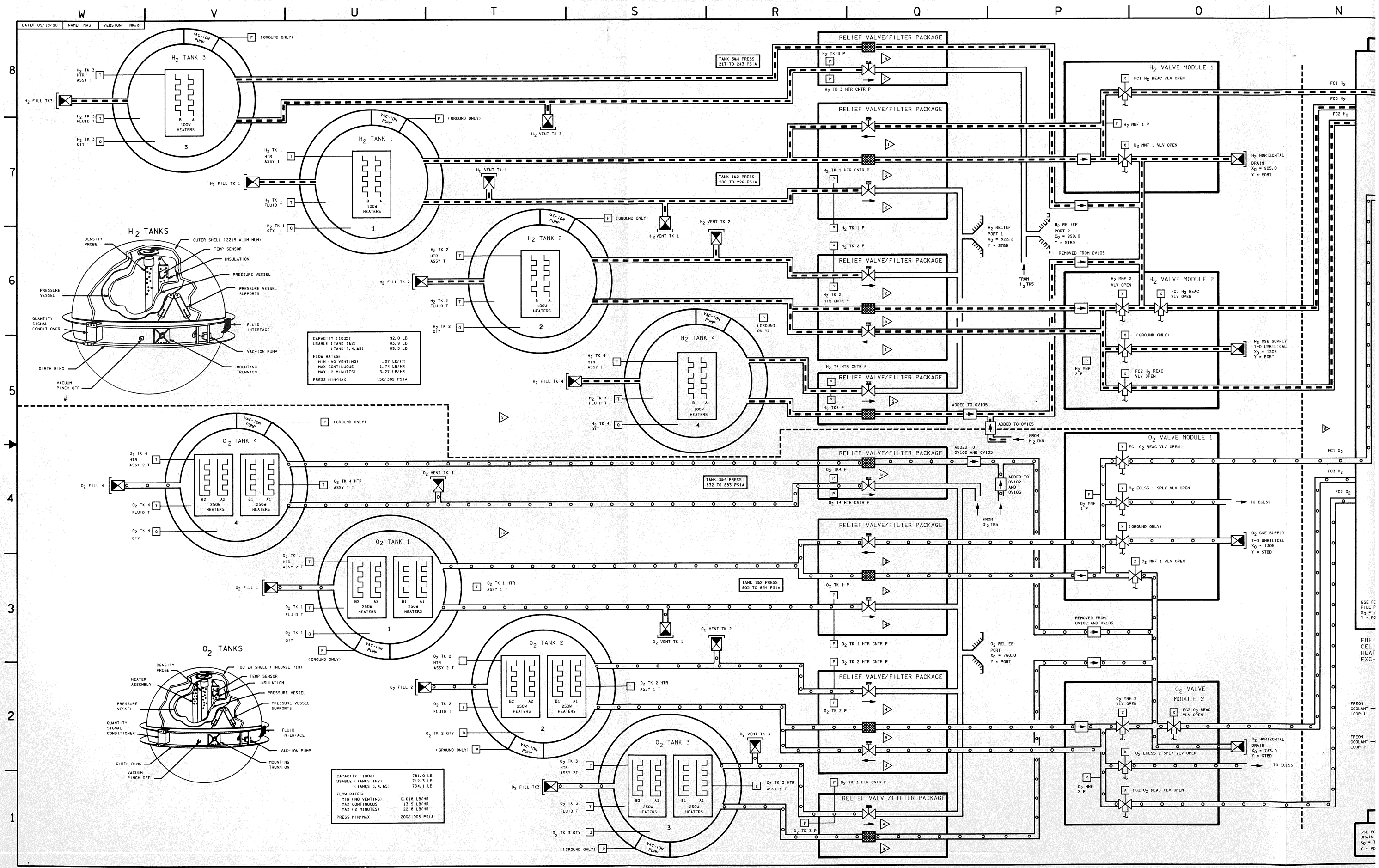

DATE: 09/19/90
NAME: MAG
VERSION: INK: 8
H2 TANK 3
H2 TANK 1
H2 TANK 2
H2 TANK 4
O2 TANK 4
O2 TANK 1
O2 TANK 2
O2 TANK 3
H2 TANKS
O2 TANKS
RELIEF VALVE/FILTER PACKAGE
H2 VALVE MODULE 1
H2 VALVE MODULE 2
O2 VALVE MODULE 1
O2 VALVE MODULE 2
TANK 3&4 PRESS 217 TO 243 PSIA
TANK 1&2 PRESS 200 TO 226 PSIA
TANK 3&4 PRESS 832 TO 883 PSIA
TANK 1&2 PRESS 803 TO 854 PSIA
CAPACITY (100%) 92.0 LB
USABLE (TANK 1&2) 83.9 LB
(TANK 3,4,&5) 89.3 LB
FLOW RATES:
MIN (NO VENTING) .07 LB/HR
MAX CONTINUOUS 1.74 LB/HR
MAX (2 MINUTES) 3.27 LB/HR
PRESS MIN/MAX 150/302 PSIA
CAPACITY (100%) 781.0 LB
USABLE (TANKS 1&2) 712.3 LB
(TANKS 3,4,&5) 734.1 LB
FLOW RATES:
MIN (NO VENTING) 0.618 LB/HR
MAX CONTINUOUS 13.9 LB/HR
MAX (2 MINUTES) 22.8 LB/HR
PRESS MIN/MAX 200/1005 PSIA

BASIC REV E

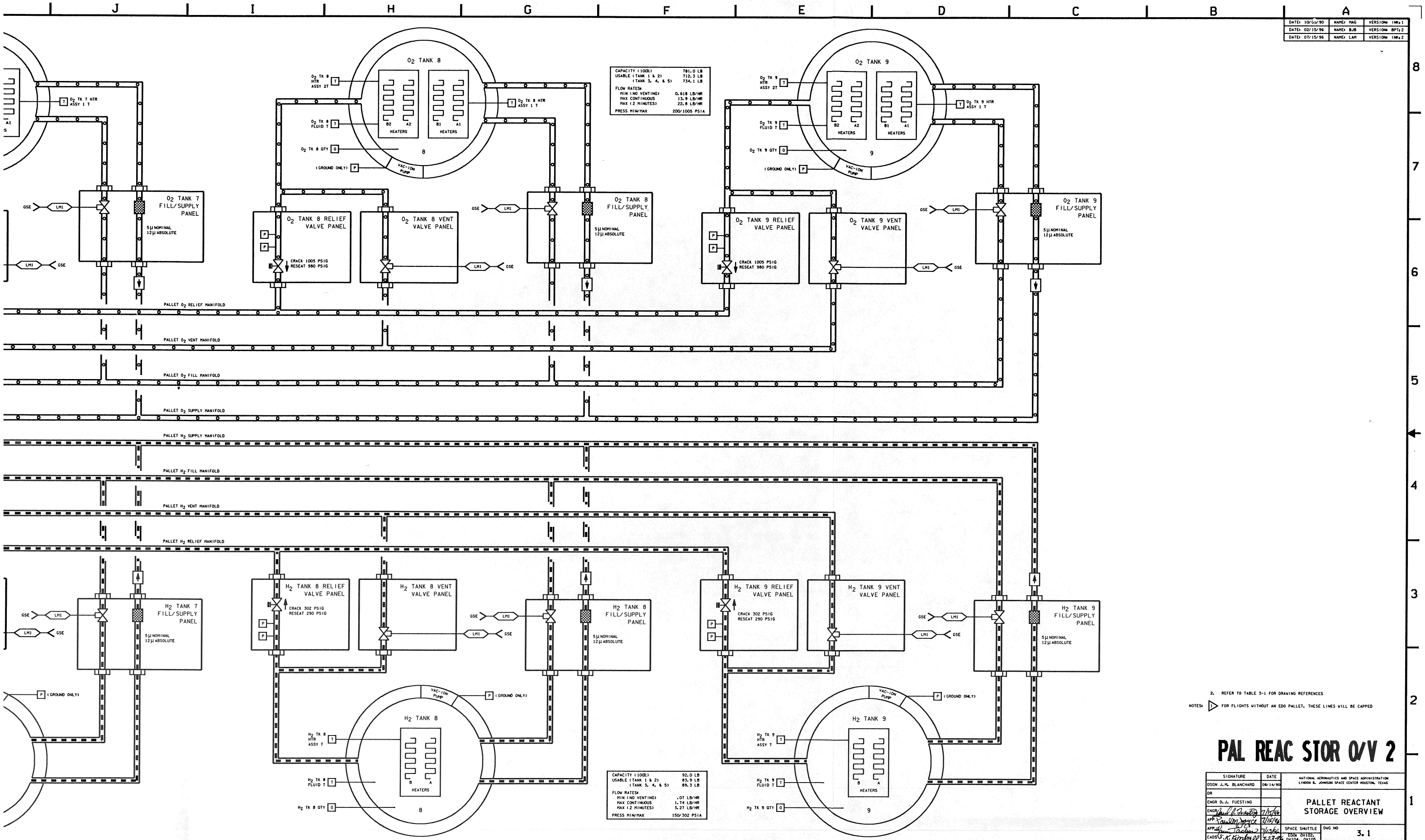

CAPACITY (100%)	781.0 LB
USABLE (TANK 1 & 2)	712.3 LB
(TANK 3, 4, & 5)	734.1 LB
FLOW RATES:	
MIN (NO VENTING)	0.618 LB/HR
MAX CONTINUOUS	13.9 LB/HR
MAX (2 MINUTES)	22.8 LB/HR
PRESS MIN/MAX	200/1005 PSIA

CAPACITY (100%)	92.0 LB
USABLE (TANK 1 & 2)	83.9 LB
(TANK 3, 4, & 5)	89.3 LB
FLOW RATES:	
MIN (NO VENTING)	.07 LB/HR
MAX CONTINUOUS	1.74 LB/HR
MAX (2 MINUTES)	3.27 LB/HR
PRESS MIN/MAX	150/302 PSIA

DATE: 10/05/90	NAME: MAG	VERSION: INK; 1
DATE: 02/15/96	NAME: BJB	VERSION: BPT; 2
DATE: 07/15/96	NAME: LAM	VERSION: INK; 2

2. REFER TO TABLE 3-1 FOR DRAWING REFERENCES

NOTES: 1 FOR FLIGHTS WITHOUT AN EDO PALLET, THESE LINES WILL BE CAPPED

PAL REAC STOR O/V 2

SIGNATURE	DATE	NATIONAL AERONAUTICS AND SPACE ADMINISTRATION LYNDON B. JOHNSON SPACE CENTER HOUSTON, TEXAS
DSGN J.M. BLANCHARD	08/14/90	
DR		PALLET REACTANT STORAGE OVERVIEW
ENGR D.J. FUESTING		
ENGR Paul A. Fuesting	7/15/96	
APP Paul M. Joyce	7/15/96	
APP Paul Jackson	7/15/96	SPACE SHUTTLE — DWG NO 3.1
CADS S.K. Kimbrell	7-23-96	EDO: OV102, OV104, OV105
LTR E — PCN 6		126.5 X 34 — PAGE — SHEET 2 OF 2

BASIC REV E-6

T S R Q P O N M L K J

ORBITER I/F PALLET I/F

O_2 TANK 3

O_2 TK 3 HTR ASSY 2T

O_2 TK 3 FLUID T

O_2 TK 3 QTY

(GROUND ONLY)

VAC-ION PUMP

B2 A2 B1 A1 HEATERS

3

O_2 TK 3 HTR ASSY 1 T

TO RELIEF VALVE/FILTER PACKAGE

GSE LM1

O_2 TK 3 VENT

FROM O_2 TK 4

FROM O_2 TK 5

FROM O_2 TK 1

FROM O_2 TK 2

FROM O_2 TK 5

O_2 RELIEF PORT X_0 = 760.0 Y = PORT

O_2 TANK 6

O_2 TK 6 HTR ASSY 2T

O_2 TK 6 FLUID T

O_2 TK 6 QTY

(GROUND ONLY)

B2 A2 B1 A1 HEATERS

6

VAC-ION PUMP

O_2 TK 6 HTR ASSY 1 T

O_2 TANK 6 RELIEF VALVE PANEL

CRACK 1005 PSIG RESEAT 980 PSIG

O_2 TANK 6 VENT VALVE PANEL

GSE LM1

O_2 TANK 6 FILL/SUPPLY PANEL

5μ NOMINAL 12μ ABSOLUTE

O_2 TANK 7

O_2 TK 7 HTR ASSY 2T

O_2 TK 7 FLUID T

O_2 TK 7 QTY

(GROUND ONLY)

B2 A2 B1 A1 HEATERS

7

VAC-ION PUMP

O_2 TK 7 HTR ASSY 1 T

O_2 TANK 7 RELIEF VALVE PANEL

CRACK 1005 PSIG RESEAT 980 PSIG

O_2 TANK 7 VENT VALVE PANEL

GSE LM1

O_2 TANK FILL/SUPPL PANE

5μ NOMINAL 12μ ABSOLUTE

PALLET O_2 REI

PALLET O_2 VE

PALLET O_2 FIL

PALLET O_2 SUP

PALLET H_2 SUP

PALLET H_2 FIL

PALLET H_2 VE

PALLET H_2 RE

H_2 TANK 3

H_2 TK 3 HTR ASSY T

H_2 TK 3 FLUID T

H_2 TK 3 QTY

(GROUND ONLY)

VAC-ION PUMP

B A HEATERS

3

H_2 TK 3 VENT

LM1 GSE

TO RELIEF VALVE/FILTER PACKAGE

FROM H_2 TK 3

H_2 RELIEF PORT 2 X_0 = 990.0 Y = STBD

FROM H_2 TK5

H_2 TANK 6

H_2 TK 6 HTR ASSY T

H_2 TK 6 FLUID T

H_2 TK 6 QTY

(GROUND ONLY)

B A HEATERS

6

VAC-ION PUMP

H_2 TANK 6 RELIEF VALVE PANEL

CRACK 302 PSIG RESEAT 290 PSIG

H_2 TANK 6 VENT VALVE PANEL

GSE LM1

H_2 TANK 6 FILL/SUPPLY PANEL

5μ NOMINAL 12μ ABSOLUTE

H_2 TANK 7

H_2 TK 7 HTR ASSY T

H_2 TK 7 FLUID T

H_2 TK 7 QTY

(GROUND ONLY)

B A HEATERS

7

VAC-ION PUMP

H_2 TANK 7 RELIEF VALVE PANEL

CRACK 302 PSIG RESEAT 290 PSIG

H_2 TANK 7 VENT VALVE PANEL

GSE LM1

H_2 TANK FILL/SUPPL PANE

5μ NOMINAL 12μ ABSOLUTE

DATE= 07/15/96 | NAME= LAM | VERSION= INK=2

W V U T S R Q P O N

8 7 6 5 4 3 2 1

ORBITER I/F | PALLET I/F

O_2 MNF 1 VLV OPEN
TO O_2 MANIFOLD 1
FROM O_2 TK 4 & 5
FROM O_2 TK 3
O_2 MNF 2 VLV OPEN
TO O_2 MANIFOLD 2
TO FC3
O_2 HORIZONTAL DRAIN X_O = 743.0 Y = STBD

H_2 MNF 1 VLV OPEN
TO H_2 MANIFOLD 1
H_2 HORIZONTAL DRAIN X_O = 905.0 Y = PORT
FROM H_2 TK 4 & 5
FROM H_2 TK 3
H_2 MNF 2 VLV OPEN
TO H_2 MANIFOLD 2
TO FC 3

O_2 FILL TK 3
GSE
LM1
O_2 TANK 3
O_2 TK 3 HTR ASSY 2T
O_2 TK 3 FLUID T
O_2 TK 3 QTY
(GROUND ONLY)
VAC-ION PUMP
HEATERS B2 A2 B1 A1
3
O_2 TK 3 HTR ASSY 1 T
O_2 TK 3 VENT
TO RELIEF VALVE/FILTER PACKAGE

FROM O_2 TK 4
FROM O_2 TK 5
FROM O_2 TK 1
FROM O_2 TK 2
FROM O_2 TK5
O_2 RELIEF PORT X_O = 760.0 Y = PORT

O_2 TANK 6
O_2 TK 6 HTR ASSY 2T
O_2 TK 6 FLUID T
O_2 TK 6 QTY
(GROUND ONLY)
HEATERS B2 A2 B1 A1
6
O_2 TK 6 HTR ASSY 1 T
O_2 TANK 6 RELIEF VALVE PANEL
CRACK 1005 PSIG
RESEAT 980 PSIG
O_2 TANK 6 VENT VALVE PANEL
GSE
LM1

H_2 FILL TK 3
GSE
LM1
H_2 TANK 3
H_2 TK 3 HTR ASSY T
H_2 TK 3 FLUID T
H_2 TK 3 QTY
VAC-ION PUMP
(GROUND ONLY)
HEATERS B A
3
H_2 TK 3 VENT
TO RELIEF VALVE/FILTER PACKAGE

FROM H_2 TK 3
H_2 RELIEF PORT 2 X_O = 990.0 Y = STBD
FROM H_2 TK5

H_2 TANK 6 RELIEF VALVE PANEL
CRACK 302 PSIG
RESEAT 290 PSIG
H_2 TANK 6 VENT VALVE PANEL
GSE
LM1
H_2 TANK 6
H_2 TK 6 HTR ASSY T
H_2 TK 6 FLUID T
H_2 TK 6 QTY
VAC-ION PUMP
(GROUND ONLY)
HEATERS B A
6

BASIC REV E-6

DATE: 10/16/91	NAME: PSD	VERSION: BPT: 19
DATE: 10/23/91	NAME: LAM	VERSION: INK: 5
DATE: 11/6/91	NAME: VSH	VERSION: INK: 6

ORBITER PRSD SYSTEM SURFACE PENETRATIONS

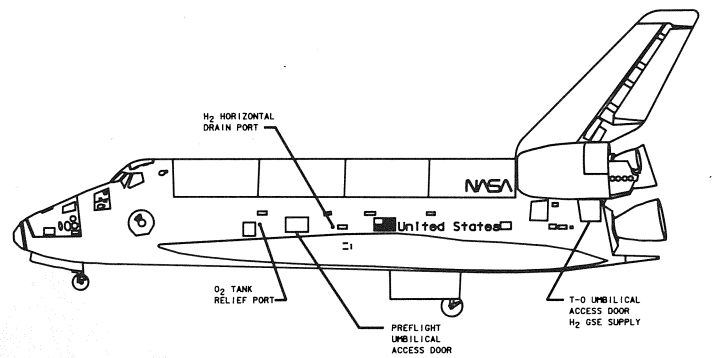

LEFT SIDE VIEW

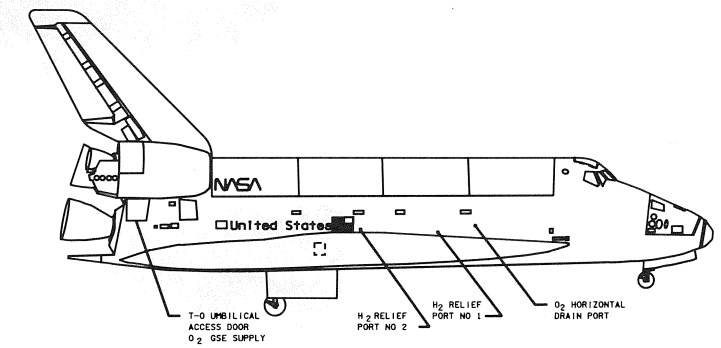

RIGHT SIDE VIEW

5. TYPE I

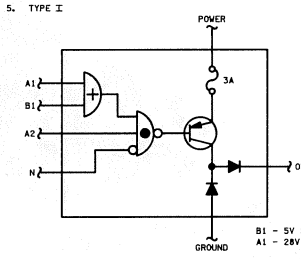

B1 - 5V SOURCE
A1 - 28V SOURCE

TYPE III

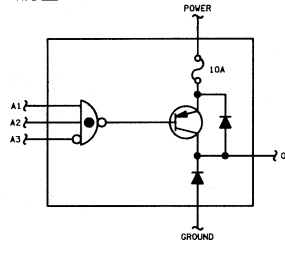

NOTES:
1. ALL FILL PORTS AND FILL VENTS ARE LOCATED BEHIND THE PREFLIGHT UMBILICAL ACCESS DOOR
2. OV 105 ONLY
3. REFER TO TABLE 3-1 FOR DRAWING REFERENCES
4. NOT USED

DRAWING APPLICABILITY MATRIX

NO OF TKS	2	3	4	5
DWG 3.2, SHEET 1	X	X	X	X
DWG 3.2, SHEET 2			X	
DWG 3.2, SHEET 3		X		
DWG 3.2, SHEET 4				X
DWG 3.2, SHEET 5				X

*2 O_2 CRYO 1

SIGNATURE	DATE	NATIONAL AERONAUTICS AND SPACE ADMINISTRATION LYNDON B. JOHNSON SPACE CENTER HOUSTON, TEXAS
DSGN V.S. DOGGETT	12/20/78	
DR V.S. DOGGETT	12/20/78	
ENGR S.R. HIRSHORN		O_2 REACTANT STORAGE TANKS 1 & 2
ENGR	11/13/91	
APP	11/13/91	
APP		SPACE SHUTTLE / DWG NO 3.2
OMNIPLAN	11-14-91	ALL
LTR E / PCN 1		126.5 X 34 / PAGE / SHEET 1 OF 7

BASIC REV E-1

S R Q P O N M L K J

CURRENT LEVEL DETECTORS

HTRA1 (+)
HTRA2 (+)
1.5A (DURING TEST)
HTRB1 (+)
HTRB2 (+)

V45 X1106E — O_2 TANK 1 HEATER A1-ON — 1=ON 1 S/S — F7 3A
V45 X1111E — O_2 TANK 1 HEATER A2-ON — 1=ON 1 S/S — F8 3A
V45 X1108E — O_2 TANK 1 HEATER B1-ON — 1=ON 1 S/S — F9 3A
V45 X1113E — O_2 TANK 1 HEATER B2-ON — 1=ON 1 S/S — F10 3A

V45 X1206E — O_2 TANK 2 HEATER A1-ON — 1=ON 1 S/S — F7 3A
V45 X1211E — O_2 TANK 2 HEATER A2-ON — 1=ON 1 S/S — F8 3A
V45 X1208E — O_2 TANK 2 HEATER B1-ON — 1=ON 1 S/S — F9 3A
V45 X1213E — O_2 TANK 2 HEATER B2-ON — 1=ON 1 S/S — F10 3A

HTR ON= 811 ± 8 PSIA
HTR OFF= 846 ± 8 PSIA

CPC1 (HEATER SIGNAL)
CPC2 (HEATER SIGNAL)

AUT02 / AUT01 — I 17 — PAIR1+CPC2 / CPC1 — I 16 — ENA1
AUTO 1 / AUTO 2 — I 17 — PAIR2+CPC1 / CPC2 — I 16 — ENA2

V_{MNA} CRY01 — ON1A+ENA1 / ON1A+AUT01A / TRIP2A — I 19 — RPC 12 10A (C)(P) / RPC 10 10A (C)(P)
V_{MNA} CRY01 — ON1A+ENA1 / ON1A+AUT01A / TRIP1A — I 21 — RPC 9 10A (C)(P) / RPC 11 10A (C)(P)
V_{MNC} CRY01 — TRIP2B / ON1B+ENA1 / ON1B+AUT01B — I 14 — RPC 8 10A (C)(P) / RPC 6 10A (C)(P)
V_{MNC} CRY01 — TRIP1B / ON1B+ENA1 / ON1B+AUT01B — IW12 — RPC 5 10A (C)(P) / RPC 7 10A (C)(P)

V_{MNB} CRY02 — ON2A+ENA2 / ON2A+AUT02A / TRIP2A — I 19 — RPC 12 10A (C)(P) / RPC 10 10A (C)(P)
V_{MNB} CRY02 — ON2A+ENA2 / ON2A+AUT02A / TRIP1A — I 21 — RPC 9 10A (C)(P) / RPC 11 10A (C)(P)
V_{MNB} CRY02 — TRIP2B / ON2B+ENA2 / ON2B+AUT02B — I 14 — RPC 8 10A (C)(P) / RPC 6 10A (C)(P)
V_{MNB} CRY02 — TRIP1B / ON2B+ENA2 / ON2B+AUT02B — I 12 — RPC 5 10A (C)(P) / RPC 7 10A (C)(P)

R1P2A (TK1)
R1P1A (TK1)
R1P2B (TK1)
R1P1B (TK1)
TRIP2A (TK2)
TRIP1A (TK2)
TRIP2B (TK2)
TRIP1B (TK2)

2A — 2B — 1A — 1B — 200Ω

V45 X1186E — O_2 TK 1 HTR 2A CUR TRIP — 1=TRIP 1 S/S F — 5.1K
V45 X1185E — O_2 TK 1 HTR 1A CUR TRIP — 1=TRIP 1 S/S F — 5.1K
V45 X1188E — O_2 TK 1 HTR 2B CUR TRIP — 1=TRIP 1 S/S F — 5.1K
V45 X1187E — O_2 TK 1 HTR 1B CUR TRIP — 1=TRIP 1 S/S F — 5.1K
V45 X1286E — O_2 TK 2 HTR 2A CUR TRIP — 1=TRIP 1 S/S F — 5.1K
V45 X1285E — O_2 TK 2 HTR 1A CUR TRIP — 1=TRIP 1 S/S F — 5.1K
V45 X1288E — O_2 TK 2 HTR 2B CUR TRIP — 1=TRIP 1 S/S F — 5.1K
V45 X1287E — O_2 TK 2 HTR 1B CUR TRIP — 1=TRIP 1 S/S F — 5.1K

MN A — CRYO O_2 HTR — TK 1 SNSR 1 — 3A — PNL 014c CB6 — V_{MNA} 014
MN C — CRYO O_2 HTR — TK 1 SNSR 2 — 3A — PNL 016c CB4 — V_{MNC} 016
MN B — CRYO O_2 HTR — TK 2 SNSR 2 — 3A — PNL 015c CB6 — V_{MNB} 015
MN C — CRYO O_2 HTR — TK 2 SNSR 1 — 3A — PNL 016c CB5 — V_{MNC} 016

YELLOW — O_2 PRESS — PNL F7A2 — HI=985 PSIA LO=540 PSIA — C&W ELECTRONICS CH20 CH0 CH10 CH30 — TK3 — TK4 (& 5)

V45 P1110A — (BFS) — O_2 TANK 1 HTR CNTR PRESS — 515 TO 1015 PSIA — 1 S/S C&W — HEATER CONTROLLER (CPC) O2 TK1
V45 P1210A — (BFS) — O_2 TANK 2 HTR CNTR PRESS — 515 TO 1015 PSIA — 1 S/S C&W — HEATER CONTROLLER (CPC) O2 TK2

ESS 2CA — CRYO CNTLR — O_2 TK 1 — 3A — PNL 013cD CB14 — V_{ESS2CA} 013A/R15
ESS 1BC — CRYO CNTLR — O_2 TK 2 — 3A — PNL 013cB CB7 — V_{ESS1BC} 013A/R15

V45 T1107A — (BFS) — OF1 OM1 — O_2 TANK 1 HTR ASSY 1 TEMP — -425 TO +475°F — 1 S/S C&W
V45 T1109A — (BFS) — OF3 OM2 — O_2 TANK 1 HTR ASSY 2 TEMP — -425 TO +475°F — 1 S/S C&W
V45 T1101A — OF2 OM2 — O_2 TANK 1 FLUID TEMP — -425 TO +475°F — 1 S/S C
V45 T1207A — (BFS) — OF3 OM1 — O_2 TANK 2 HTR ASSY 1 TEMP — -425 TO +475°F — 1 S/S C&W
V45 T1209A — (BFS) — OF2 OM2 — O_2 TANK 2 HTR ASSY 2 TEMP — -425 TO +475°F — 1 S/S C&W
V45 T1201A — OF3 OM1 — O_2 TANK 2 FLUID TEMP — -425 TO +475°F — 1 S/S C

V45 Q1105A — OF1 OF1 — O_2 TANK 1 QUANTITY — 0 TO 104% — 1 S/S C
V45 Q1205A — OF2 OF2 — O_2 TANK 2 QUANTITY — 0 TO 104% — 1 S/S C

V45 P1100A — OF1 OF1 — O_2 TANK 1 PRESSURE — 0 TO 1200 PSIA — 1 S/S F
V45 P1200A — OF3 OF3 — O_2 TANK 2 PRESSURE — 0 TO 1200 PSIA — 1 S/S F

V_{PRFLT1} MMC2&CRY01&4 — LF1 — GSE (QTY SELF TEST)
V_{PRFLT2} MMC4& CRY02&3 — LF1 — GSE (QTY SELF TEST)

ESS 2CA — CRYO QTY — O_2 TK 1 — 3A — PNL 013cD CB22 — V_{ESS2CA} 013A/R15
ESS 1BC — CRYO QTY — O_2 TK 2 — 3A — PNL 013cB CB20 — V_{ESS1BC} 013A/R15

RELIEF VALVE/ FILTER PACKAGE
CRACK=975 PSIG RESEAT=950 PSIG — MANF RLF
5µ NOMINAL 12µ ABSOLUTE
CRACK=1005 PSIG RESEAT=980 PSIG — G/B RLF
CRACK=975 PSIG RESEAT=950 PSIG — MANF RLF

SUPPLY — VENT — FILL — HTR B2 — HTR A2 — HTR B1 — HTR A1 — ASSEMBLY 2 — ASSEMBLY 1

O_2 FILL 1 — V45P1104A (GROUND ONLY) — O_2 VENT TK1
O_2 FILL 2 — V45P1204A (GROUND ONLY) — O_2 VENT TK2

DC/DC — VAC ION PUMP

1 2

DSC — +/-

Z_1 Z_2 Z_3 Z_4 Z_5 Z_6

PRESS

PNL 02

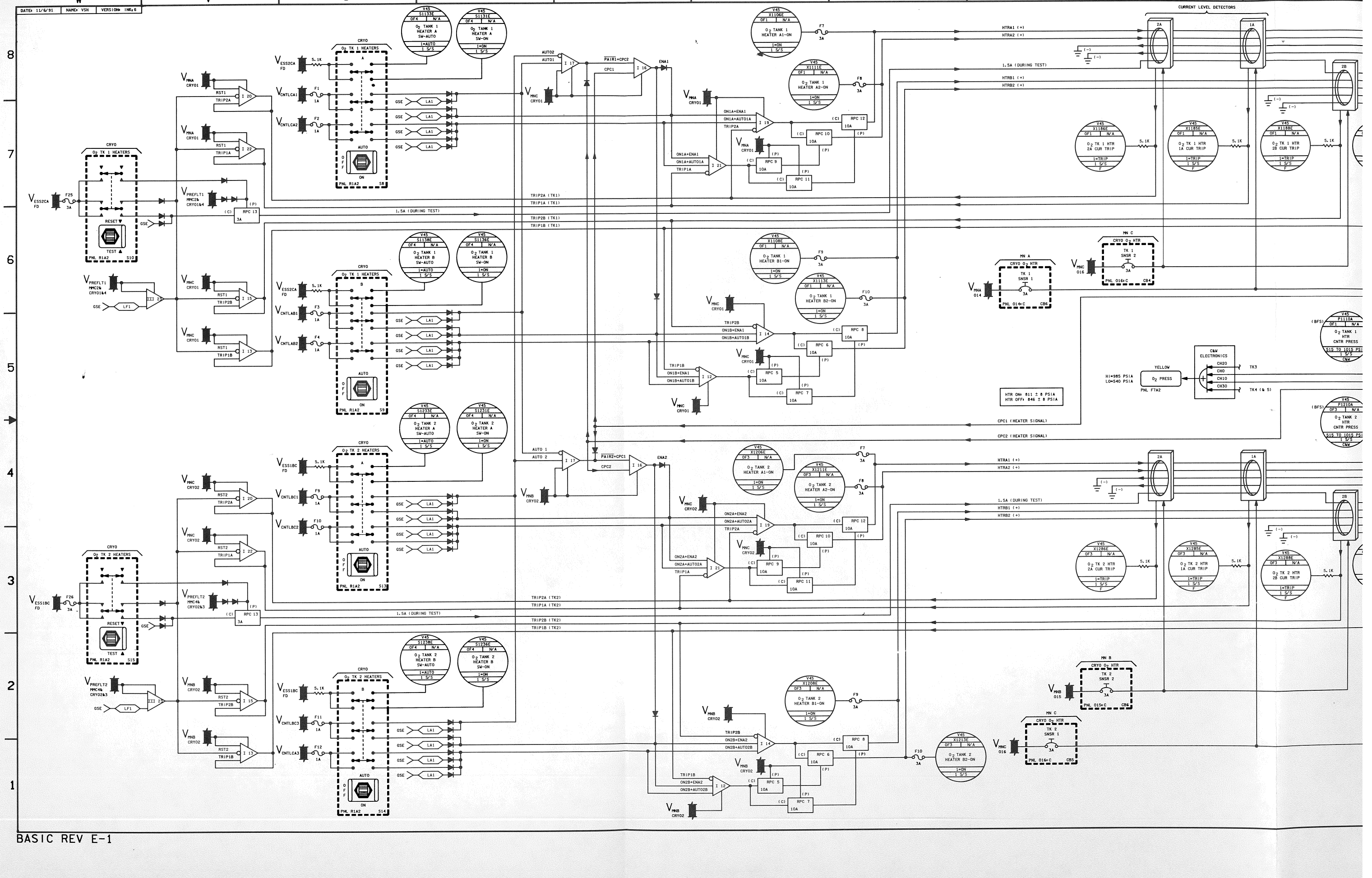
DATE: 11/6/91
NAME: VSH
VERSION: INK: 6
CURRENT LEVEL DETECTORS
CRYO
O2 TK 1 HEATERS
O2 TK 2 HEATERS
O2 TANK 1 HEATER A SW-AUTO
O2 TANK 1 HEATER A SW-ON
O2 TANK 1 HEATER A1-ON
O2 TANK 1 HEATER A2-ON
O2 TANK 1 HEATER B SW-AUTO
O2 TANK 1 HEATER B SW-ON
O2 TANK 1 HEATER B1-ON
O2 TANK 1 HEATER B2-ON
O2 TANK 2 HEATER A SW-AUTO
O2 TANK 2 HEATER A SW-ON
O2 TANK 2 HEATER A1-ON
O2 TANK 2 HEATER A2-ON
O2 TANK 2 HEATER B SW-AUTO
O2 TANK 2 HEATER B SW-ON
O2 TANK 2 HEATER B1-ON
O2 TANK 2 HEATER B2-ON
O2 TK 1 HTR 2A CUR TRIP
O2 TK 1 HTR 1A CUR TRIP
O2 TK 1 HTR 2B CUR TRIP
O2 TK 2 HTR 2A CUR TRIP
O2 TK 2 HTR 1A CUR TRIP
O2 TK 2 HTR 2B CUR TRIP
O2 TANK 1 HTR CNTR PRESS
O2 TANK 2 HTR CNTR PRESS
C&W ELECTRONICS
YELLOW
O2 PRESS
HI=985 PSIA
LO=540 PSIA
HTR ON: 811 ± 8 PSIA
HTR OFF: 846 ± 8 PSIA
CPC1 (HEATER SIGNAL)
CPC2 (HEATER SIGNAL)
1.5A (DURING TEST)
TRIP2A (TK1)
TRIP1A (TK1)
TRIP2B (TK1)
TRIP1B (TK1)
TRIP2A (TK2)
TRIP1A (TK2)
TRIP2B (TK2)
TRIP1B (TK2)
HTRA1 (+)
HTRA2 (+)
HTRB1 (+)
HTRB2 (+)
PNL R1A2
PNL F7A2

BASIC REV E-1

DATE: 10/17/91	NAME: JMB	VERSION: BPT: 6
DATE: 10/29/91	NAME: LAM	VERSION: INK: 5
DATE: 11/6/91	NAME: VSH	VERSION: INK: 6

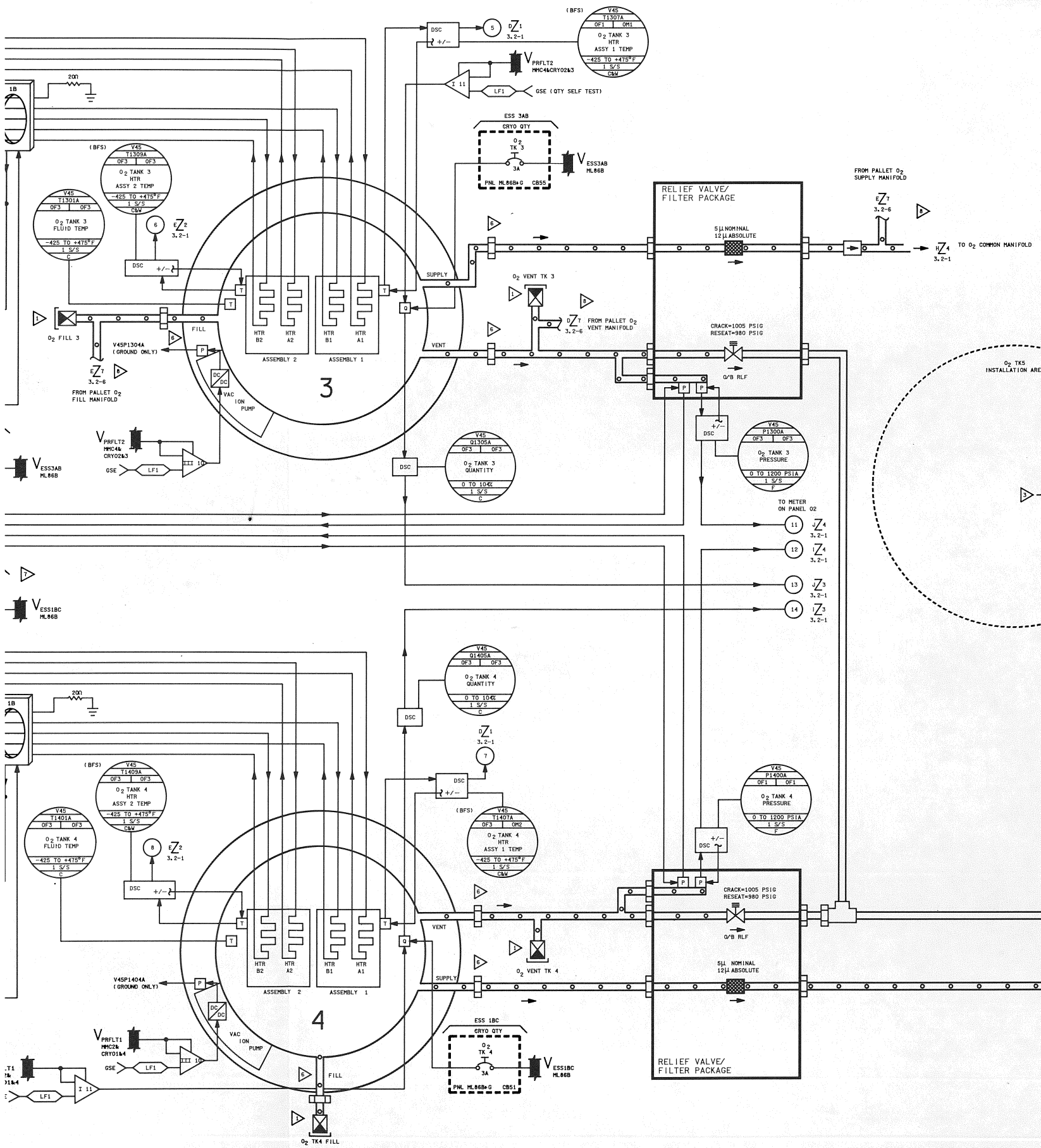

▷ OV-102/5 ONLY

▷ SWITCHES AND CIRCUIT BREAKERS ARE SHOWN AS THEY APPEAR ON OV-103 AND OV-104. ON OV-102, THEY ARE WIRED IDENTICALLY BUT PANEL DECALS APPEAR AS SHOWN BELOW

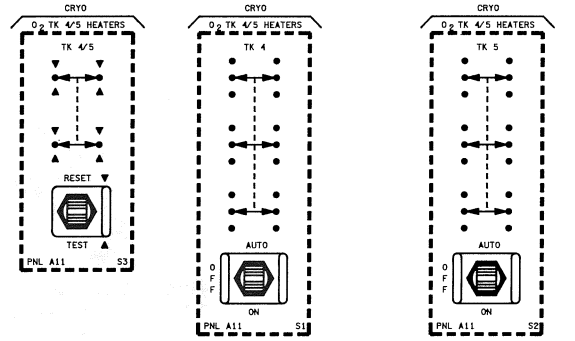

▷ FITTING CAPPED WHEN TANK IS REMOVED

5. REFER TO TABLE 3-1 FOR DRAWING REFERENCES

4. TYPE I

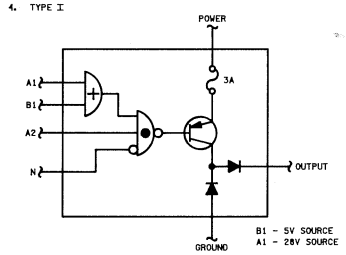

▷ EXTENSION STUBS ARE ADDED AND CAPPED WHEN TANK 5 REMOVED

▷ SHADED PLUMBING INSTALLED ON VEHICLE OV-102/105 ONLY

NOTES: ▷ ALL FILL PORTS AND FILL VENTS ARE LOCATED BEHIND THE PREFLIGHT UMBILICAL ACCESS DOOR

*2 O_2 CRYO 2

SIGNATURE		DATE	
DSGN	V.S. DOOGETT	6/3/81	NATIONAL AERONAUTICS AND SPACE ADMINISTRATION LYNDON B. JOHNSON SPACE CENTER HOUSTON, TEXAS
DR	V.S. DOOGETT	6/3/81	
ENGR	S.R. HIRSHORN		O_2 REACTANT STORAGE 4 TANK CONFIG
ENGR		11/15/91	
APP		11/15/91	
APP			SPACE SHUTTLE
OMNIPLAN	S.K. Lindsey	11-14-91	ALL
LTR E	PCN 1		121 X 34

DWG NO 3.2

PAGE SHEET 2 OF 7

BASIC REV E-1

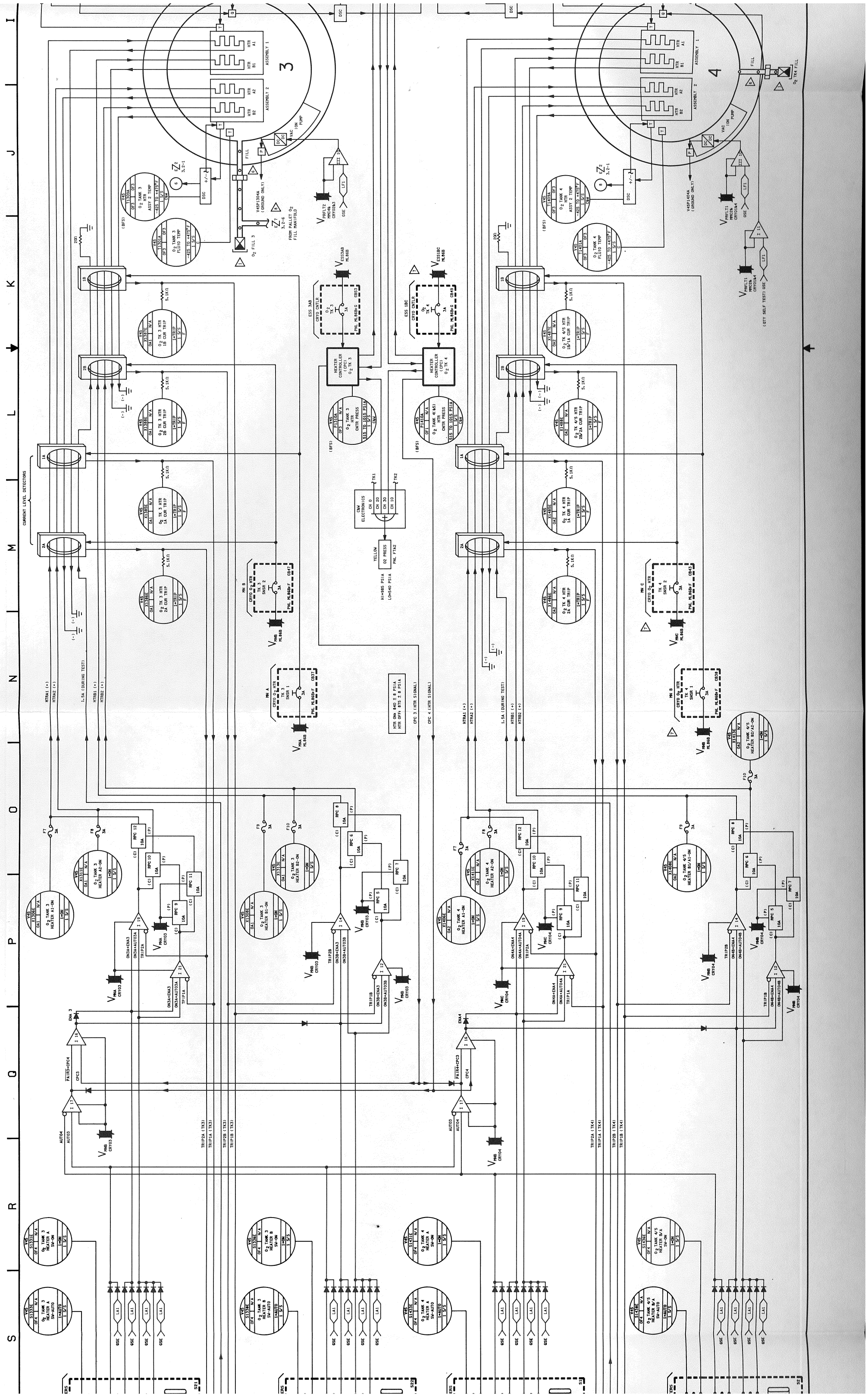
L K J I
P O N M
S R Q
CURRENT LEVEL DETECTORS
3
4
ASSEMBLY 1
ASSEMBLY 2
HTR A1
HTR B1
HTR A2
HTR B2
ION PUMP
VAC
FILL
FROM PALLET O2 FILL MANIFOLD
O2 FILL 3
O2 TK4 FILL
V45P13044 (GROUND ONLY)
V45P14044 (GROUND ONLY)
V45 T1309A O2 TANK 3 HTR ASSY 2 TEMP -425 TO +475°F
V45 T1301A O2 TANK 3 FLUID TEMP -425 TO +475°F
V45 T1409A O2 TANK 4 HTR ASSY 2 TEMP -425 TO +475°F
V45 T1401A O2 TANK 4 FLUID TEMP -425 TO +475°F
DSC
VAC ION PUMP
LF1
GSE
1A
2A
1B
2B
200
5.1KΩ
V45 X138TE O2 TK 3 HTR 1B CUR TRIP
V45 X139BE O2 TK 3 HTR 2B CUR TRIP
V45 X138BE O2 TK 3 HTR 1A CUR TRIP
V45 X139BE O2 TK 3 HTR 2A CUR TRIP
V45 X140TE O2 TK 4/5 HTR 1B/1A CUR TRIP
V45 X140BE O2 TK 4/5 HTR 2B/2A CUR TRIP
V45 X140BE O2 TK 4 HTR 1A CUR TRIP
V45 X140BE O2 TK 4 HTR 2A CUR TRIP
V45 X130E O2 TANK 3 HEATER A1-ON
V45 X131E O2 TANK 3 HEATER A2-ON
V45 X130BE O2 TANK 3 HEATER B1-ON
V45 X133E O2 TANK 3 HEATER B2-ON
V45 X140GE O2 TANK 4 HEATER A1-ON
V45 X141E O2 TANK 4 HEATER A2-ON
V45 X140BE O2 TANK 4/5 HEATER B1/A1-ON
V45 X141BE O2 TANK 4/5 HEATER B2/A2-ON
V45 S133E O2 TANK 3 HEATER A SW-AUTO
V45 S135E O2 TANK 3 HEATER B SW-AUTO
V45 S143E O2 TANK 4 HEATER A SW-AUTO
V45 S143BE O2 TANK 4/5 HEATER B/A SW-AUTO
V45 S131E O2 TANK 3 HEATER A SW-ON
V45 S135E O2 TANK 3 HEATER B SW-ON
V45 S141E O2 TANK 4 HEATER A SW-ON
V45 S143BE O2 TANK 4/5 HEATER B/A SW-ON
HEATER CONTROLLER (CPC) O2 TK 3
HEATER CONTROLLER (CPC) O2 TK 4
ESS 3AB CRYO CNTLR
ESS 1BC CRYO CNTLR
O2 TK 3
O2 TK 4
3A
PNL ML86B+G OSS3
PNL ML86B+G C243
V45 P1310A O2 TANK 3 HTR CNTR PRESS 515 TO 1015 PSIA
V45 P1410A O2 TANK 4(4&5) HTR CNTR PRESS 515 TO 1015 PSIA
CRYO O2 HTR TK 3 SNSR 1
CRYO O2 HTR TK 3 SNSR 2
CRYO O2 HTR TK 4 SNSR 1
CRYO O2 HTR TK 4 SNSR 2
PNL ML86B+F CB37
PNL ML86B+F CB47
PNL ML86B+F CB35
PNL ML86B+F CB43
MN A
MN B
MN C
C&W ELECTRONICS
CH 0
CH 20
CH 30
CH 10
TK1
TK2
YELLOW
O2 PRESS
PNL F7A2
HI=985 PSIA
LO=540 PSIA
HTR ON= 840 ± 8 PSIA
HTR OFF= 875 ± 8 PSIA
CPC 3 (HTR SIGNAL)
CPC 4 (HTR SIGNAL)
HTRA1 (+)
HTRA2 (+)
HTRB1 (+)
HTRB2 (+)
1.5A (DURING TEST)
F7 3A
F8 3A
F9 3A
F10 3A
RPC 12 10A
RPC 10 10A
RPC 11 10A
RPC 9 10A
RPC 8 10A
RPC 6 10A
RPC 5 10A
RPC 7 10A
ON3A+ENA3
ON3A+AUTO3A
ON3B+ENA3
ON3B+AUTO3B
ON4A+ENA4
ON4A+AUTO4A
ON4B+ENA4
ON4B+AUTO4B
TRIP2A
TRIP1A
TRIP1B
TRIP2B
ENA 3
ENA4
PA1R3+CPC4
PA1R4+CPC3
CPC3
CPC4
AUTO4
AUTO3
TRIP2A (TK3)
TRIP1A (TK3)
TRIP2B (TK3)
TRIP1B (TK3)
TRIP2A (TK4)
TRIP1A (TK4)
TRIP2B (TK4)
TRIP1B (TK4)
ERS
S21
S22
S1
S2
LA1
(BFS)
(QTY SELF TEST) GSE

BASIC REV E-1

HTR OFF: 815.2 PSIA
HTR ON: 840.2 PSIA

CPC 3 (HTR SIGNAL)
CPC 4 (HTR SIGNAL)

1.5A (DURING TEST)
HTRA1 (+)
HTRA2 (+)
HTRB1 (+)
HTRB2 (+)

TRIP2A (TX3)
TRIP1A (TX3)
TRIP2B (TX3)
TRIP1B (TX3)

TRIP2A (TX4)
TRIP1A (TX4)
TRIP2B (TX4)
TRIP1B (TX4)

DNA4+ENA4
DNA4+AUTO4A
DNB4+ENB4
DNB4+AUTO4B
DNA3+ENA3
DNA3+AUTO3A
DNB3+ENB3
DNB3+AUTO3B

AUTO3
AUTO4
PAIR3+CPC3
PAIR4+CPC4
ENA3
ENA4

O2 TX 4 HEATERS
O2 TX 3 HEATERS
O2 TANK 4 HEATER A SW-AUTO
O2 TANK 4 HEATER A SW-ON
O2 TANK 3 HEATER A SW-AUTO
O2 TANK 3 HEATER A SW-ON
O2 TANK 4 HEATER B/A SW-AUTO
O2 TANK 4/5 HEATER B/A SW-ON
O2 TANK 3 HEATER B SW-AUTO
O2 TANK 3 HEATER B SW-ON
O2 TANK 4 HEATER A2-ON
O2 TANK 4 HEATER A1-ON
O2 TANK 3 HEATER A2-ON
O2 TANK 3 HEATER A1-ON
O2 TANK 4/5 HEATER B2/A2-ON
O2 TANK 4/5 HEATER B1/A1-ON
O2 TANK 3 HEATER B2-ON
O2 TANK 3 HEATER B1-ON

PWA A11 S1 / PWB A11 S2 / PWA A12 S21 / PWB A12 S22
TEST A / RESET
PWA CWT03 / PWB CWT04
PWC CWT04 / PWA CWT03
PWB CWT04 / PWB CWT03
PWA CWT03 / PWC CWT04
PWC CWT04 / PWB CWT04
PWB CWT03 / PWA CWT03
PWA CWT03 / PWB CWT03
PWB CWT04 / PWC CWT04
PWC CWT04 / PWA CWT03
PWA CWT03 / PWB CWT03
PWB CWT03 / PWA CWT03
PWA CWT03 / PWC CWT04
PWC CWT04 / PWB CWT04
PWB CWT03 / PWA CWT03
PWA CWT03 / PWB CWT03
PWB CWT04 / PWC CWT04
PWC CWT04

DATE: 10/16/90	NAME: VSH	VERSION: INK 4
DATE: 10/16/91	NAME: PSD	VERSION: BPT 8
DATE: 10/29/91	NAME: LAM	VERSION: INK 5

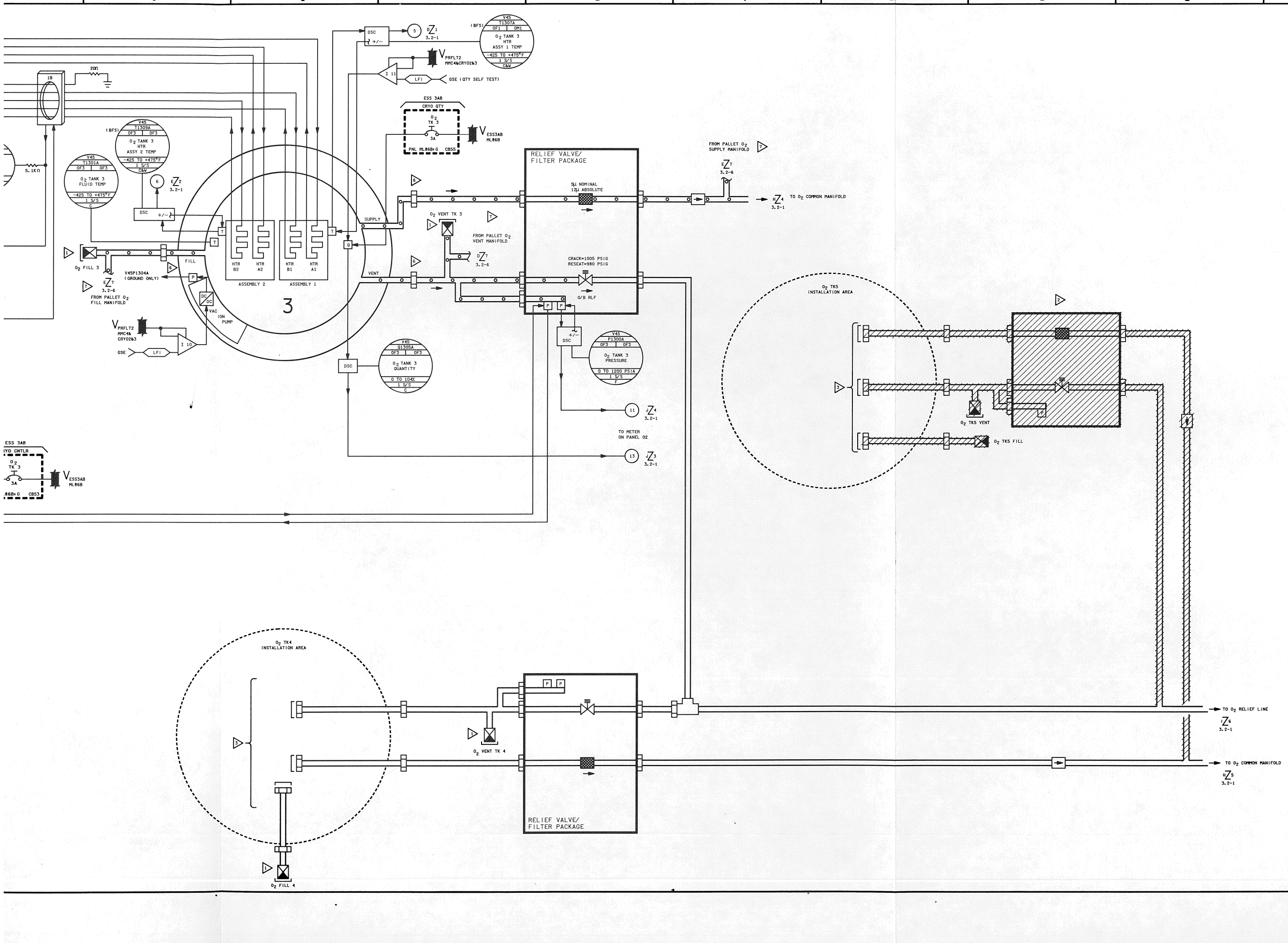

7. OV-102/5 ONLY

6. FITTING CAPPED WHEN TANK IS REMOVED

5. REFER TO TABLE 3-1 FOR DRAWING REFERENCES

4. TYPE I

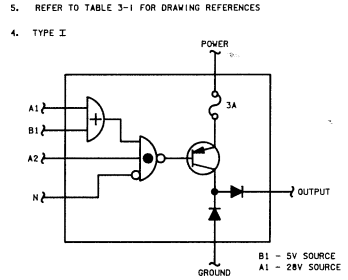

TYPE III

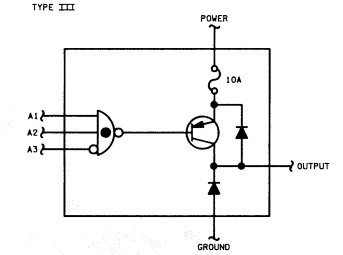

3. EXTENSION STUBS ARE ADDED AND CAPPED WHEN TANK REMOVED

2. SHADED PLUMBING INSTALLED ON VEHICLE OV-102/105 ONLY

NOTES: 1. ALL FILL PORTS AND FILL VENTS ARE LOCATED BEHIND THE PREFLIGHT UMBILICAL ACCESS DOOR

*2 O_2 CRYO 3

SIGNATURE		DATE	NATIONAL AERONAUTICS AND SPACE ADMINISTRATION LYNDON B. JOHNSON SPACE CENTER HOUSTON, TEXAS
DSGN	V. S. DOGGETT	6/3/81	
DR	V. S. DOGGETT	6/3/81	
ENGR	S. R. HIRSHORN		O_2 REACTANT STORAGE 3 TANK CONFIG
ENGR		11/5/91	
APP		11/5/91	
APP			SPACE SHUTTLE — DWG NO 3.2
OMNIPLAN	S. K. Tucker	11-12-91	ALL
LTR E	PCN 1		121 X 34 — PAGE — SHEET 3 OF 7

BASIC REV E-1

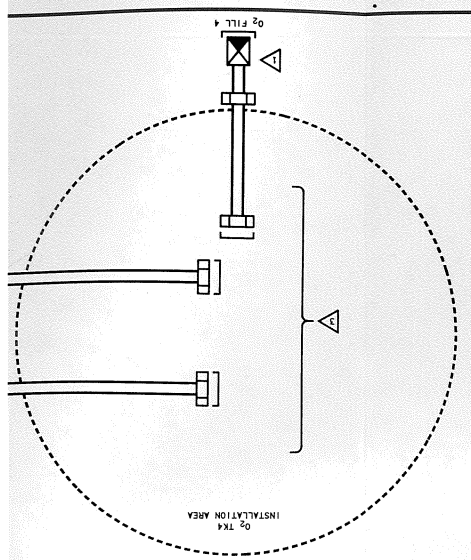
O2 FILL 4
O2 TK4
INSTALLATION AREA

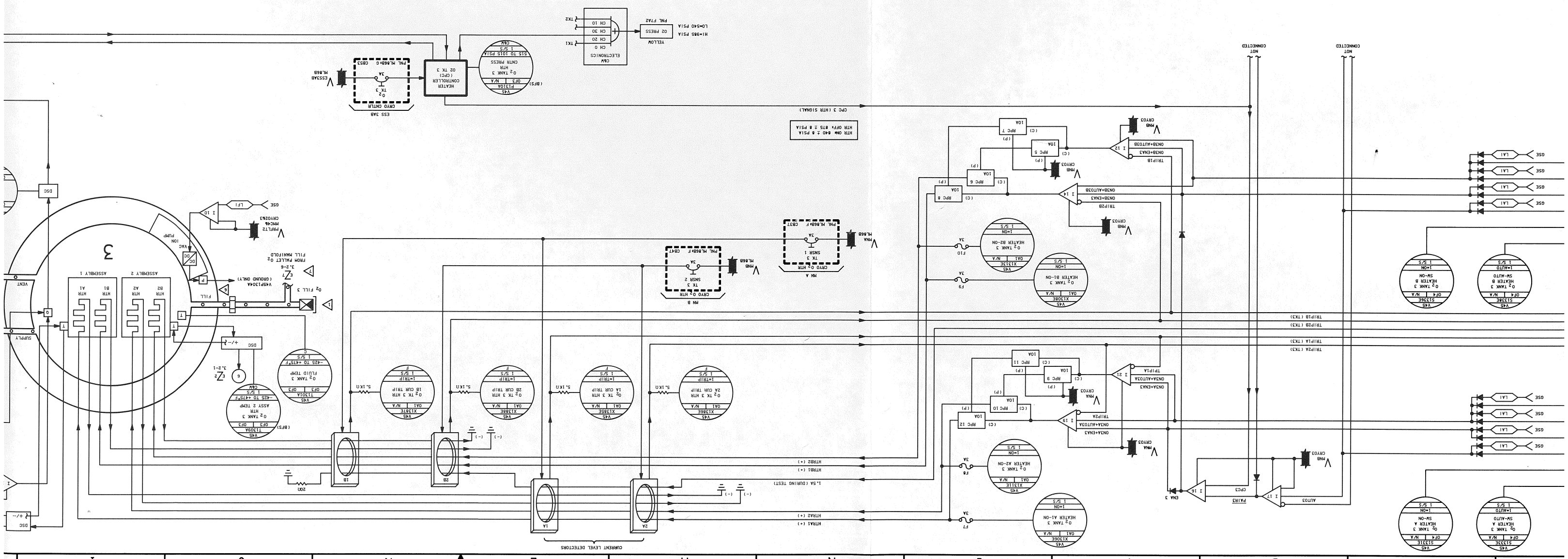
R
Q
P
O
N
M
L
K
J
I
CURRENT LEVEL DETECTORS
HTRA1 (+)
HTRA2 (+)
HTRB1 (+)
HTRB2 (+)
1.5A (DURING TEST)
CPO 3 (HTR SIGNAL)
HTR ON@ 840 ± 8 PSIA
HTR OFF@ 815 ± 8 PSIA
TRIP1A (TX3)
TRIP2A (TX3)
TRIP1B (TX3)
TRIP2B (TX3)
GSE
LAI
NOT CONNECTED
O2 TANK 3 HEATER A SW-AUTO
O2 TANK 3 HEATER B SW-AUTO
O2 TANK 3 HEATER A1-ON
O2 TANK 3 HEATER A2-ON
O2 TANK 3 HEATER B1-ON
O2 TANK 3 HEATER B2-ON
AUTO3
CWA3
PAIH3
ONA3+AUTO3A
ONA3+ENA3
ONB3+AUTO3B
ONB3+ENA3
TRIP1A
TRIP2A
TRIP1B
TRIP2B
MNA CRYO3
MNB CRYO3
PNL PL868A-G CB52
PNL PL868A-F CB47
PNL PL868-F CB37
ESS 3A8
CRYO CNTLR
HEATER CONTROLLER (CPO) O2 TK 3
CNTR PRESS
O2 TANK 3 HTR
P1510A
V46
(BFS)
615 TO 1015 PSIA
1 S/S
C&W
C&W ELECTRONICS
CH 0
CH 10
CH 20
CH 30
TX1
TX2
O2 PRESS
YELLOW
PNL FTA2
HI=385 PSIA
LO=540 PSIA
CRYO O2 TK3
SNSR 1
TK 3
CRYO O2 HTR
SNSR 2
TK 3
MA A
MA B
MB A
MB B
O2 TK 3 HTR 1A CUR TRIP
O2 TK 3 HTR 2A CUR TRIP
O2 TK 3 HTR 1B CUR TRIP
O2 TK 3 HTR 2B CUR TRIP
O2 TANK 3 FLUID TEMP
O2 TANK 3 ASSY 2 TEMP
-425 TO +475°F
-425 TO +428°F
T1703A
OF3
OA1
X13866
X13816E
X13813E
X13812E
1=TRIP
1=ON
1=AUTO
SW-ON
1 S/S
5.1KΩ
80Ω
1A
2A
1B
2B
1.5A
3A
10A
5A
FUSE
RPC 5
RPC 6
RPC 7
RPC 8
RPC 9
RPC 10
RPC 11
RPC 12
FA
FB
FC
FD
FE
FF
FP
FP9
FP10
FP11
FP12
I 12
I 14
I 16
I 17
I 18
I 21
I 10
I 1
I 2
I 3
I 4
I 5
I 6
I 7
I 8
I 9
3
ASSEMBLY 1
ASSEMBLY 2
HTR A1
HTR B1
HTR A2
HTR B2
VENT
SUPPLY
FILL
P
T
Q
O2 FILL 3
FROM PALLET O2 FILL MANIFOLD
V45P13044 (GROUND ONLY)
PRESS
TEMP
+/-
DSC
VAC
ION PUMP
PRF12
CRYO243
PMC46
TX4
TX3
TX2
TX1
6
Z1
Z2
3,2-6
3,2-1

DATE: 10/29/91 | NAME: LAM | VERSION: INK+5

V U T S R Q P O N

8 7 6 5 4 3 2 1

CRYO O2 TK 3 HEATERS

V_{ES53AB} FD — F27 3A — RESET / TEST — S23 — PNL R1A2

GSE — LA!

$V_{PREFLT2}$ MMC4k CRYO2&3

V_{MNA} CRYO3 — RST3 — TRIP2A — I 20

V_{MNA} CRYO3 — RST3 — TRIP1A — I 22

V_{MNB} CRYO3 — RST3 — TRIP2B — I 15

V_{MNB} CRYO3 — RST3 — TRIP1B — I 13

RPC 13 3A (C)(P)

1.5A (DURING TEST)

CRYO O2 TK 3 HEATERS A

V_{ES53AB} FD — 5.1K

$V_{CNTLAB1}$ — F17 1A

$V_{CNTLAB2}$ — F18 1A

GSE — LA! (×4)

AUTO / OFF / ON — PNL R1A2 — S21

V45 S1333E 0F4 N/A — O2 TANK 3 HEATER A SW-AUTO — 1=AUTO 1 S/S

V45 S1331E 0F4 N/A — O2 TANK 3 HEATER A SW-ON — 1=ON 1 S/S

CRYO O2 TK 3 HEATERS B

V_{ES53AB} FD — 5.1K

$V_{CNTLCA1}$ — F19 1A

$V_{CNTLCA2}$ — F20 1A

GSE — LA! (×4)

AUTO / OFF / ON — PNL R1A2 — S22

V45 S1338E 0F4 N/A — O2 TANK 3 HEATER B SW-AUTO — 1=AUTO 1 S/S

V45 S1336E 0F4 N/A — O2 TANK 3 HEATER B SW-ON — 1=ON 1 S/S

AUTO3 — I 17 — V_{MNB} CRYO3

PAIR3 — CPC3 — I 16 — ENA 3

TRIP2A (TK3)

TRIP1A (TK3)

TRIP2B (TK3)

TRIP1B (TK3)

ON3A+ENA3 — ON3A+AUTO3A — TRIP2A — I 19 — V_{MNA} CRYO3

ON3A+ENA3 — ON3A+AUTO3A — TRIP1A — I 21 — V_{MNA} CRYO3

RPC 12 10A (C)(P)

RPC 10 10A (C)(P)

RPC 9 10A (P)(C)

RPC 11 10A (P)(C)

TRIP2B — ON3B+ENA3 — ON3B+AUTO3B — I 14 — V_{MNB} CRYO3

TRIP1B — ON3B+ENA3 — ON3B+AUTO3B — I 12 — V_{MNB} CRYO3

RPC 8 10A (C)(P)

RPC 6 10A (C)(P)

RPC 5 10A (P)(C)

RPC 7 10A (P)(C)

V45 X1306E 0A1 N/A — O2 TANK 3 HEATER A1-ON — 1=ON 1 S/S — F7 3A — HTRA1 (+) HTRA2 (+)

V45 X1311E 0A1 N/A — O2 TANK 3 HEATER A2-ON — 1=ON 1 S/S — F8 3A — 1.5A (DURING TE HTRB1 (+) HTRB2 (+)

V45 X1308E 0A1 N/A — O2 TANK 3 HEATER B1-ON — 1=ON 1 S/S — F9 3A

V45 X1313E 0A1 N/A — O2 TANK 3 HEATER B2-ON — 1=ON 1 S/S — F10 3A

MN A — CRYO O2 HTR — TK 3 SNSR 1 — 3A — V_{MNA} ML86B — PNL ML86B+F CB37

HTR ON= 840 ± 8 PSIA
HTR OFF= 875 ± 8 PSIA

CPC 3 (HTR SIGNAL)

NOT CONNECTED

NOT CONNECTED

BASIC REV E-1

DATE: 10/19/90	NAME: JDF	VERSION: INK, 1
DATE: 10/17/91	NAME: LAM	VERSION: BPT, 2
DATE: 10/29/91	NAME: LAM	VERSION: INK, 2

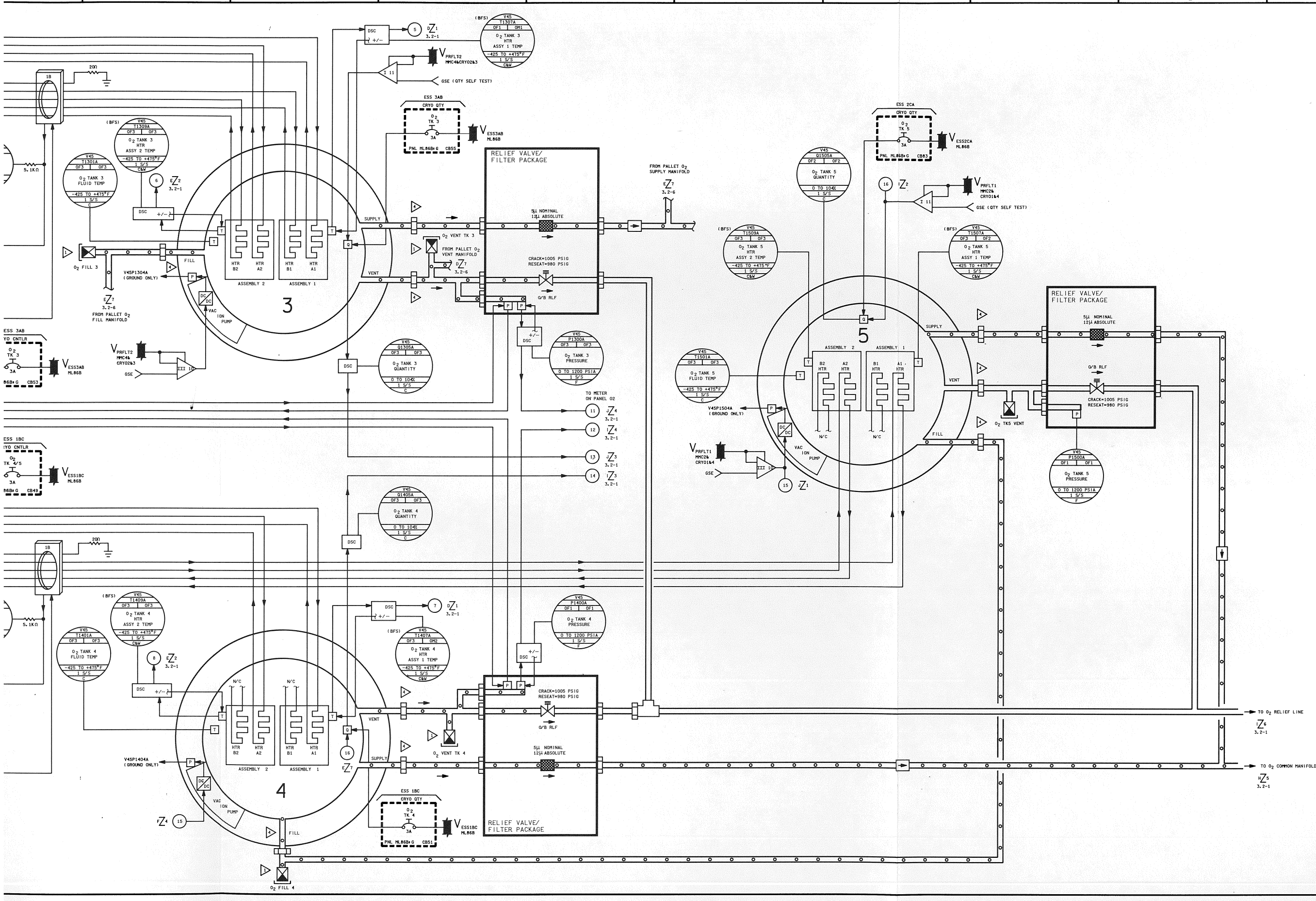

*2 O_2 CRYO 4

SIGNATURE		DATE	NATIONAL AERONAUTICS AND SPACE ADMINISTRATION LYNDON B. JOHNSON SPACE CENTER HOUSTON, TEXAS
DSGN	V. S. DOGGETT	6/3/81	
DR	V. S. DOGGETT	6/3/81	O_2 REACTANT STORAGE 5 TANK CONFIGURATION OV-102
ENGR	S.R. HIRSHORN		
ENGR		11/5/91	
APP		11/6/91	
APP			SPACE SHUTTLE / DWG NO 3.2
OMNIPLAN	S.R. Hirshorn 11/29/91		OV-102
LTR E	PCN 1		121 X 34 / PAGE / SHEET 4 OF 7

BASIC REV E-1

S R Q P O N M L K J

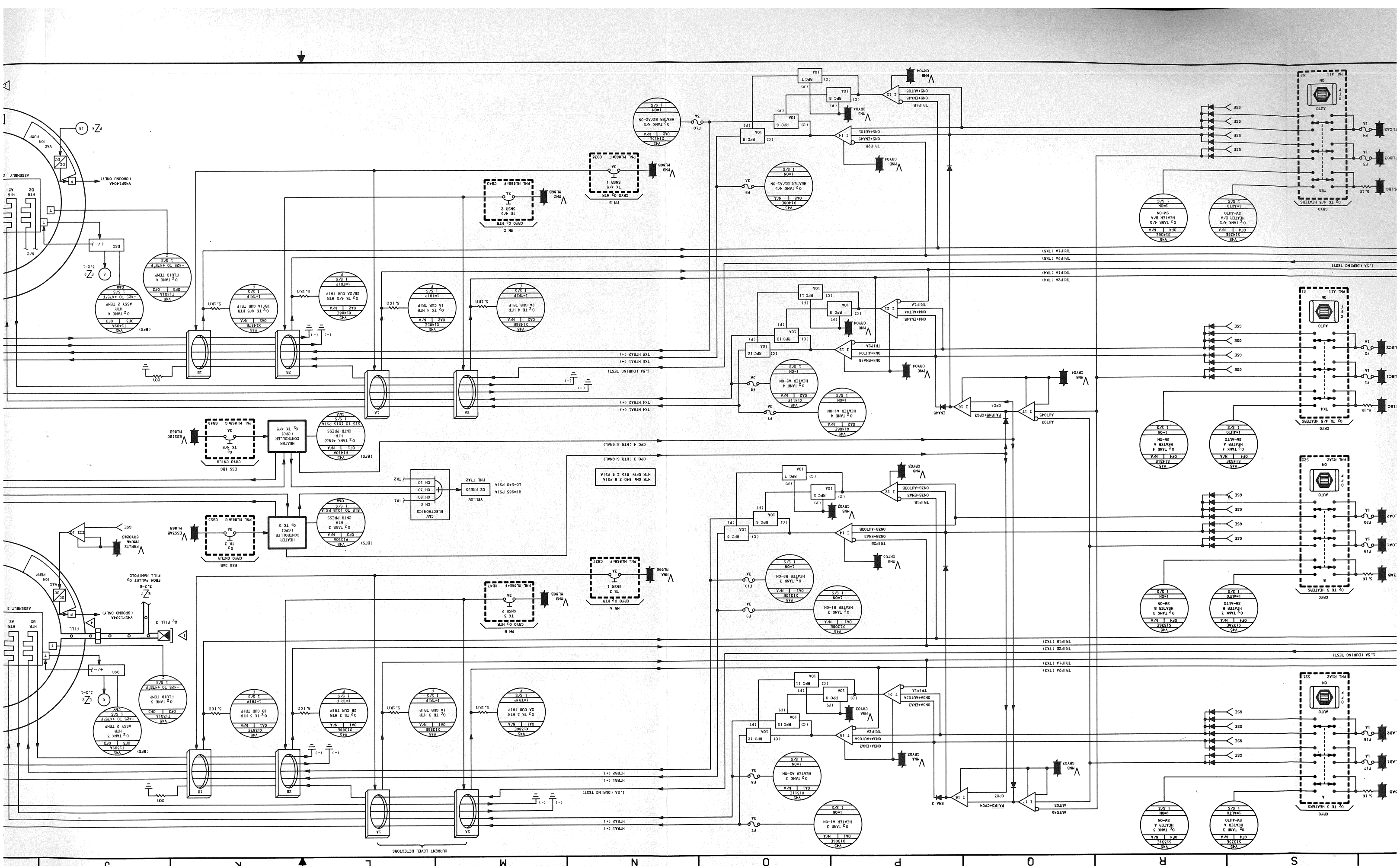
S
R
Q
P
O
N
M
L
K
J
CURRENT LEVEL DETECTORS
1A
2A
1B
2B
20Ω
5.1KΩ
1.5A (DWELL TEST)
TX4 HTRA1 (+)
TX4 HTRA2 (+)
TX5 HTRA1 (+)
TX5 HTRA2 (+)
TRIP1A (TX4)
TRIP2A (TX4)
TRIP1A (TX5)
TRIP2A (TX5)
CPC 3 (HTR SIGNAL)
CPC 4 (HTR SIGNAL)
HTR ON 840 ± 8 PSIA
HTR OFF 815 ± 8 PSIA
HI=985 PSIA
LO=540 PSIA
YELLOW
O2 PRESS
PNL F7A2
ELECTRONICS
CAW
CH 0
CH 10
CH 20
CH 30
TX1
TX2
HEATER CONTROLLER (CPC)
O2 TX 4/5
O2 TX 3
ESS 1BC
ESS 3AB
CRYO CNTLR
ESS1BC PL868
ESS3AB PL868
PNL PL868B-G C843
PNL PL868B-C C853
PNL PL868B-F C837
PNL PL868B-F C843
PNL PL868B-F C837
MN C PL868
MN B PL868
MN A PL868
CRYO O2 HTR SNSR 1
CRYO O2 HTR SNSR 2
TX 4/5
TX 3
O2 TANK 4/5 HEATER B1-ON
O2 TANK 4/5 HEATER B2-ON
O2 TANK 4/5 HEATER A1-ON
O2 TANK 4/5 HEATER A2-ON
O2 TANK 3 HEATER B1-ON
O2 TANK 3 HEATER B2-ON
O2 TANK 3 HEATER A1-ON
O2 TANK 3 HEATER A2-ON
O2 TANK 4 HEATER B/A SW-AUTO
O2 TANK 4/5 HEATER B/A SW-ON
O2 TANK 4 HEATER A SW-AUTO
O2 TANK 4 HEATER A SW-ON
O2 TANK 3 HEATER B SW-AUTO
O2 TANK 3 HEATER B SW-ON
O2 TANK 3 HEATER A SW-AUTO
O2 TANK 3 HEATER A SW-ON
O2 TX 4/5 HEATERS
O2 TX 3 HEATERS
CRYO
AUTO
ON
OFF
PNL A11
PNL R12
PNL R13
PNL R14
PNL R15
PNL R16
PNL R17
PNL R18
PNL R19
PNL S21
PNL S22
TX4
TX5
TX3
1BC
2BC
1CA3
1CB3
1CA4
1CB4
1CA2
1CB2
1CA1
1CB1
1AB
2AB
1AB2
2AB2
1AB1
2AB1
1CA
1CB
2CA
2CB
5.1K
AUTO45
PAIR45+CPC4
PAIR3+CPC4
CPC4
CPC3
ENA45
ENA3
TRIP1A
TRIP2A
TRIP1B
TRIP2B
ONA4+AUTO4
ONA4+ENA45
ONA3+AUTO3A
ONA3+ENA3
ONA3B+AUTO3B
ONA3B+ENA3
ONS+AUTO5
ONS+ENA45
MNC
MNB
MNA
CRYO4
CRYO3
RPC 5
RPC 6
RPC 7
RPC 8
RPC 9
RPC 10
RPC 11
RPC 12
10A
F7
F8
F9
F10
F1
F2
F3
F4
F18
F17
F19
F20
F21
F22
GSE
OSE
DSC
+/−2
E1Z1
E2Z2
E3Z7
E4Z5
E5Z6
E6Z8
E7Z4
FILL
FILL MANIFOLD
FROM PALLET O2
O2 FILL 3
V45P1304A
V45P1404A
(GROUND ONLY)
ASSEMBLY 2
HTR A2
HTR B2
HTR A1
HTR B1
N/C
VAC
ION
PUMP
O2 TANK 4 FLUID TEMP
-425 TO +415°F
T14014A
O2 TANK 4 ASSY 2 TEMP
T11034A
O2 TANK 3 FLUID TEMP
T13034A
O2 TX 4/5 HTR 1B/1A CUR TRIP
O2 TX 4 HTR 1A CUR TRIP
O2 TX 4/5 HTR 2B/2A CUR TRIP
O2 TX 4 HTR 2A CUR TRIP
O2 TX 3 HTR 1B CUR TRIP
O2 TX 3 HTR 1A CUR TRIP
O2 TX 3 HTR 2B CUR TRIP
O2 TX 3 HTR 2A CUR TRIP
O2 TANK 4/5 HEATER B2/A2-ON
O2 TANK 4 HEATER A2-ON
O2 TANK 4 HEATER A1-ON
O2 TANK 3 HEATER B2-ON
O2 TANK 3 HEATER B1-ON
O2 TANK 3 HEATER A2-ON
O2 TANK 3 HEATER A1-ON
O2 TANK 4/5 HEATER B/A SW-AUTO
O2 TANK 4/5 HEATER B/A SW-ON
O2 TANK 4 HEATER A SW-AUTO
O2 TANK 4 HEATER A SW-ON
O2 TANK 3 HEATER B SW-AUTO
O2 TANK 3 HEATER B SW-ON
O2 TANK 3 HEATER A SW-AUTO
O2 TANK 3 HEATER A SW-ON
(BFS)
P14014
P13034
P13134
P14134
P15134
P15034
P15014
P14034
P13014
P14014
P13034
P13134
P14134
P15134
P15034
P15014
P14034
P13014
V45
V46
V47
X14138
X14138E
X14138F
X14138G
X14138H
X14138J
X14138K
X14138L
X14138M
X14138N
X14138P
X14138Q
X14138R
X14138S
X14138T
X14138U
X14138V
X14138W
X14138X
X14138Y
X14138Z
X14138AA
X14138AB
X14138AC
X14138AD
X14138AE
X14138AF
X14138AG
X14138AH
X14138AJ
X14138AK
X14138AL
X14138AM
X14138AN
X14138AP
X14138AQ
X14138AR
X14138AS
X14138AT
X14138AU
X14138AV
X14138AW
X14138AX
X14138AY
X14138AZ
X14138BA
X14138BB
X14138BC
X14138BD
X14138BE
X14138BF
X14138BG
X14138BH
X14138BJ
X14138BK
X14138BL
X14138BM
X14138BN
X14138BP
X14138BQ
X14138BR
X14138BS
X14138BT
X14138BU
X14138BV
X14138BW
X14138BX
X14138BY
X14138BZ
X14138CA
X14138CB
X14138CC
X14138CD
X14138CE
X14138CF
X14138CG
X14138CH
X14138CJ
X14138CK
X14138CL
X14138CM
X14138CN
X14138CP
X14138CQ
X14138CR
X14138CS
X14138CT
X14138CU
X14138CV
X14138CW
X14138CX
X14138CY
X14138CZ
X14138DA
X14138DB
X14138DC
X14138DD
X14138DE
X14138DF
X14138DG
X14138DH
X14138DJ
X14138DK
X14138DL
X14138DM
X14138DN
X14138DP
X14138DQ
X14138DR
X14138DS
X14138DT
X14138DU
X14138DV
X14138DW
X14138DX
X14138DY
X14138DZ
X14138EA
X14138EB
X14138EC
X14138ED
X14138EE
X14138EF
X14138EG
X14138EH
X14138EJ
X14138EK
X14138EL
X14138EM
X14138EN
X14138EP
X14138EQ
X14138ER
X14138ES
X14138ET
X14138EU
X14138EV
X14138EW
X14138EX
X14138EY
X14138EZ
X14138FA
X14138FB
X14138FC
X14138FD
X14138FE
X14138FF
X14138FG
X14138FH
X14138FJ
X14138FK
X14138FL
X14138FM
X14138FN
X14138FP
X14138FQ
X14138FR
X14138FS
X14138FT
X14138FU
X14138FV
X14138FW
X14138FX
X14138FY
X14138FZ
X14138GA
X14138GB
X14138GC
X14138GD
X14138GE
X14138GF
X14138GG
X14138GH
X14138GJ
X14138GK
X14138GL
X14138GM
X14138GN
X14138GP
X14138GQ
X14138GR
X14138GS
X14138GT
X14138GU
X14138GV
X14138GW
X14138GX
X14138GY
X14138GZ
X14138HA
X14138HB
X14138HC
X14138HD
X14138HE
X14138HF
X14138HG
X14138HH
X14138HJ
X14138HK
X14138HL
X14138HM
X14138HN
X14138HP
X14138HQ
X14138HR
X14138HS
X14138HT
X14138HU
X14138HV
X14138HW
X14138HX
X14138HY
X14138HZ
X14138JA
X14138JB
X14138JC
X14138JD
X14138JE
X14138JF
X14138JG
X14138JH
X14138JJ
X14138JK
X14138JL
X14138JM
X14138JN
X14138JP
X14138JQ
X14138JR
X14138JS
X14138JT
X14138JU
X14138JV
X14138JW
X14138JX
X14138JY
X14138JZ
X14138KA
X14138KB
X14138KC
X14138KD
X14138KE
X14138KF
X14138KG
X14138KH
X14138KJ
X14138KK
X14138KL
X14138KM
X14138KN
X14138KP
X14138KQ
X14138KR
X14138KS
X14138KT
X14138KU
X14138KV
X14138KW
X14138KX
X14138KY
X14138KZ
X14138LA
X14138LB
X14138LC
X14138LD
X14138LE
X14138LF
X14138LG
X14138LH
X14138LJ
X14138LK
X14138LL
X14138LM
X14138LN
X14138LP
X14138LQ
X14138LR
X14138LS
X14138LT
X14138LU
X14138LV
X14138LW
X14138LX
X14138LY
X14138LZ
X14138MA
X14138MB
X14138MC
X14138MD
X14138ME
X14138MF
X14138MG
X14138MH
X14138MJ
X14138MK
X14138ML
X14138MM
X14138MN
X14138MP
X14138MQ
X14138MR
X14138MS
X14138MT
X14138MU
X14138MV
X14138MW
X14138MX
X14138MY
X14138MZ
X14138NA
X14138NB
X14138NC
X14138ND
X14138NE
X14138NF
X14138NG
X14138NH
X14138NJ
X14138NK
X14138NL
X14138NM
X14138NN
X14138NP
X14138NQ
X14138NR
X14138NS
X14138NT
X14138NU
X14138NV
X14138NW
X14138NX
X14138NY
X14138NZ
X14138PA
X14138PB
X14138PC
X14138PD
X14138PE
X14138PF
X14138PG
X14138PH
X14138PJ
X14138PK
X14138PL
X14138PM
X14138PN
X14138PP
X14138PQ
X14138PR
X14138PS
X14138PT
X14138PU
X14138PV
X14138PW
X14138PX
X14138PY
X14138PZ
X14138QA
X14138QB
X14138QC
X14138QD
X14138QE
X14138QF
X14138QG
X14138QH
X14138QJ
X14138QK
X14138QL
X14138QM
X14138QN
X14138QP
X14138QQ
X14138QR
X14138QS
X14138QT
X14138QU
X14138QV
X14138QW
X14138QX
X14138QY
X14138QZ
X14138RA
X14138RB
X14138RC
X14138RD
X14138RE
X14138RF
X14138RG
X14138RH
X14138RJ
X14138RK
X14138RL
X14138RM
X14138RN
X14138RP
X14138RQ
X14138RR
X14138RS
X14138RT
X14138RU
X14138RV
X14138RW
X14138RX
X14138RY
X14138RZ
X14138SA
X14138SB
X14138SC
X14138SD
X14138SE
X14138SF
X14138SG
X14138SH
X14138SJ
X14138SK
X14138SL
X14138SM
X14138SN
X14138SP
X14138SQ
X14138SR
X14138SS
X14138ST
X14138SU
X14138SV
X14138SW
X14138SX
X14138SY
X14138SZ
X14138TA
X14138TB
X14138TC
X14138TD
X14138TE
X14138TF
X14138TG
X14138TH
X14138TJ
X14138TK
X14138TL
X14138TM
X14138TN
X14138TP
X14138TQ
X14138TR
X14138TS
X14138TT
X14138TU
X14138TV
X14138TW
X14138TX
X14138TY
X14138TZ
X14138UA
X14138UB
X14138UC
X14138UD
X14138UE
X14138UF
X14138UG
X14138UH
X14138UJ
X14138UK
X14138UL
X14138UM
X14138UN
X14138UP
X14138UQ
X14138UR
X14138US
X14138UT
X14138UU
X14138UV
X14138UW
X14138UX
X14138UY
X14138UZ
X14138VA
X14138VB
X14138VC
X14138VD
X14138VE
X14138VF
X14138VG
X14138VH
X14138VJ
X14138VK
X14138VL
X14138VM
X14138VN
X14138VP
X14138VQ
X14138VR
X14138VS
X14138VT
X14138VU
X14138VV
X14138VW
X14138VX
X14138VY
X14138VZ
X14138WA
X14138WB
X14138WC
X14138WD
X14138WE
X14138WF
X14138WG
X14138WH
X14138WJ
X14138WK
X14138WL
X14138WM
X14138WN
X14138WP
X14138WQ
X14138WR
X14138WS
X14138WT
X14138WU
X14138WV
X14138WW
X14138WX
X14138WY
X14138WZ
X14138XA
X14138XB
X14138XC
X14138XD
X14138XE
X14138XF
X14138XG
X14138XH
X14138XJ
X14138XK
X14138XL
X14138XM
X14138XN
X14138XP
X14138XQ
X14138XR
X14138XS
X14138XT
X14138XU
X14138XV
X14138XW
X14138XX
X14138XY
X14138XZ
X14138YA
X14138YB
X14138YC
X14138YD
X14138YE
X14138YF
X14138YG
X14138YH
X14138YJ
X14138YK
X14138YL
X14138YM
X14138YN
X14138YP
X14138YQ
X14138YR
X14138YS
X14138YT
X14138YU
X14138YV
X14138YW
X14138YX
X14138YY
X14138YZ
X14138ZA
X14138ZB
X14138ZC
X14138ZD
X14138ZE
X14138ZF
X14138ZG
X14138ZH
X14138ZJ
X14138ZK
X14138ZL
X14138ZM
X14138ZN
X14138ZP
X14138ZQ
X14138ZR
X14138ZS
X14138ZT
X14138ZU
X14138ZV
X14138ZW
X14138ZX
X14138ZY
X14138ZZ

DATE: 10/29/90 | NAME: LAM | VERSION: INC-2

BASIC REV E-1

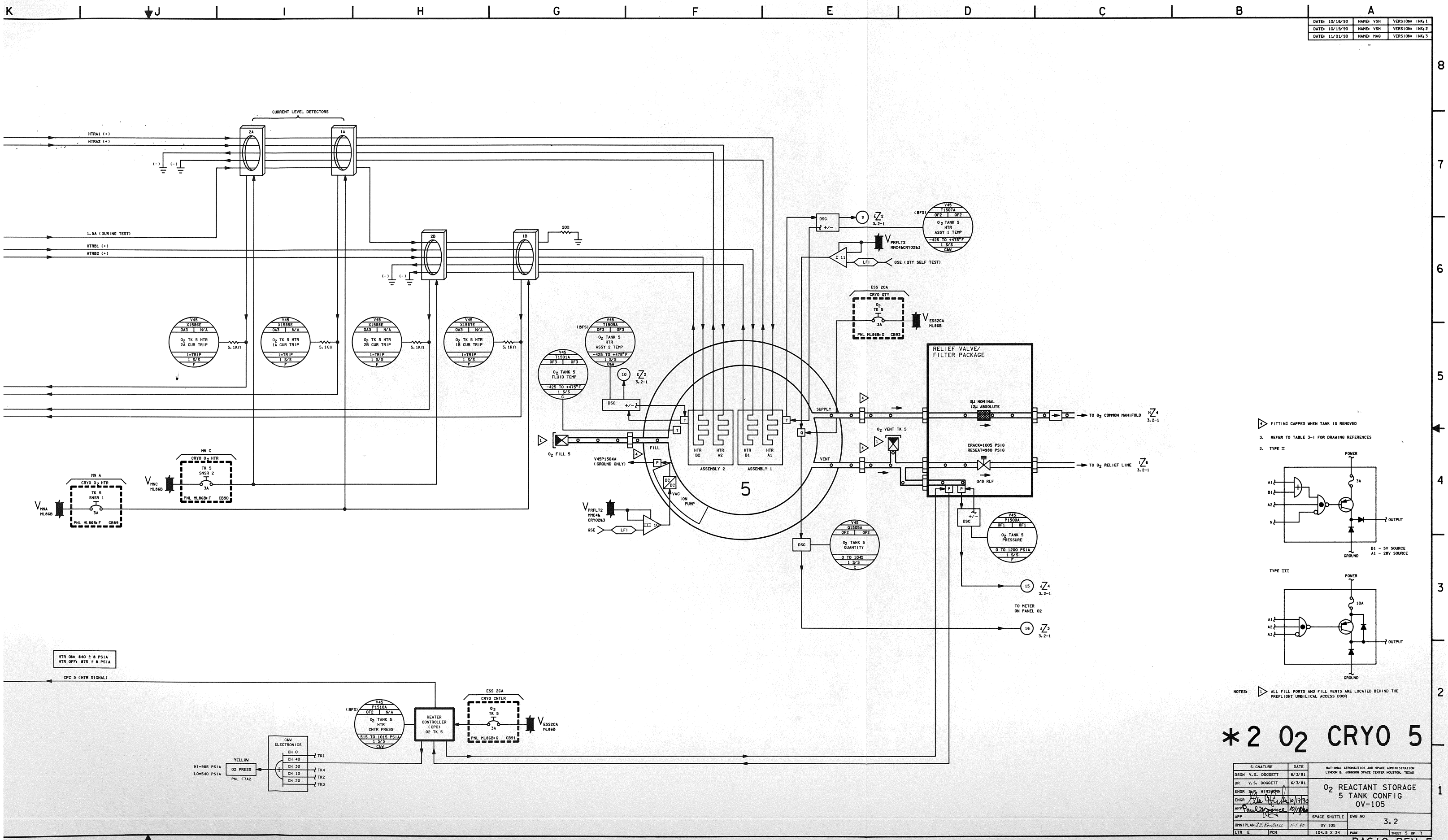

4 FITTING CAPPED WHEN TANK IS REMOVED

3. REFER TO TABLE 3-1 FOR DRAWING REFERENCES

2. TYPE I

TYPE III

NOTES: 1 ALL FILL PORTS AND FILL VENTS ARE LOCATED BEHIND THE PREFLIGHT UMBILICAL ACCESS DOOR

*2 O_2 CRYO 5

SIGNATURE	DATE	NATIONAL AERONAUTICS AND SPACE ADMINISTRATION LYNDON B. JOHNSON SPACE CENTER HOUSTON, TEXAS
DSGN V.S. DOGGETT	6/3/81	O_2 REACTANT STORAGE 5 TANK CONFIG OV-105
DR V.S. DOGGETT	6/3/81	
ENGR S.R. HIRSHORN		
ENGR [signature]	10/17/90	
APP [signature]	10/18/90	
APP		SPACE SHUTTLE OV 105 — DWG NO 3.2
OMNIPLAN S.L. Kimbrell	11-1-90	
LTR E — PCN		104.5 X 34 — PAGE — SHEET 5 OF 7

BASIC REV E

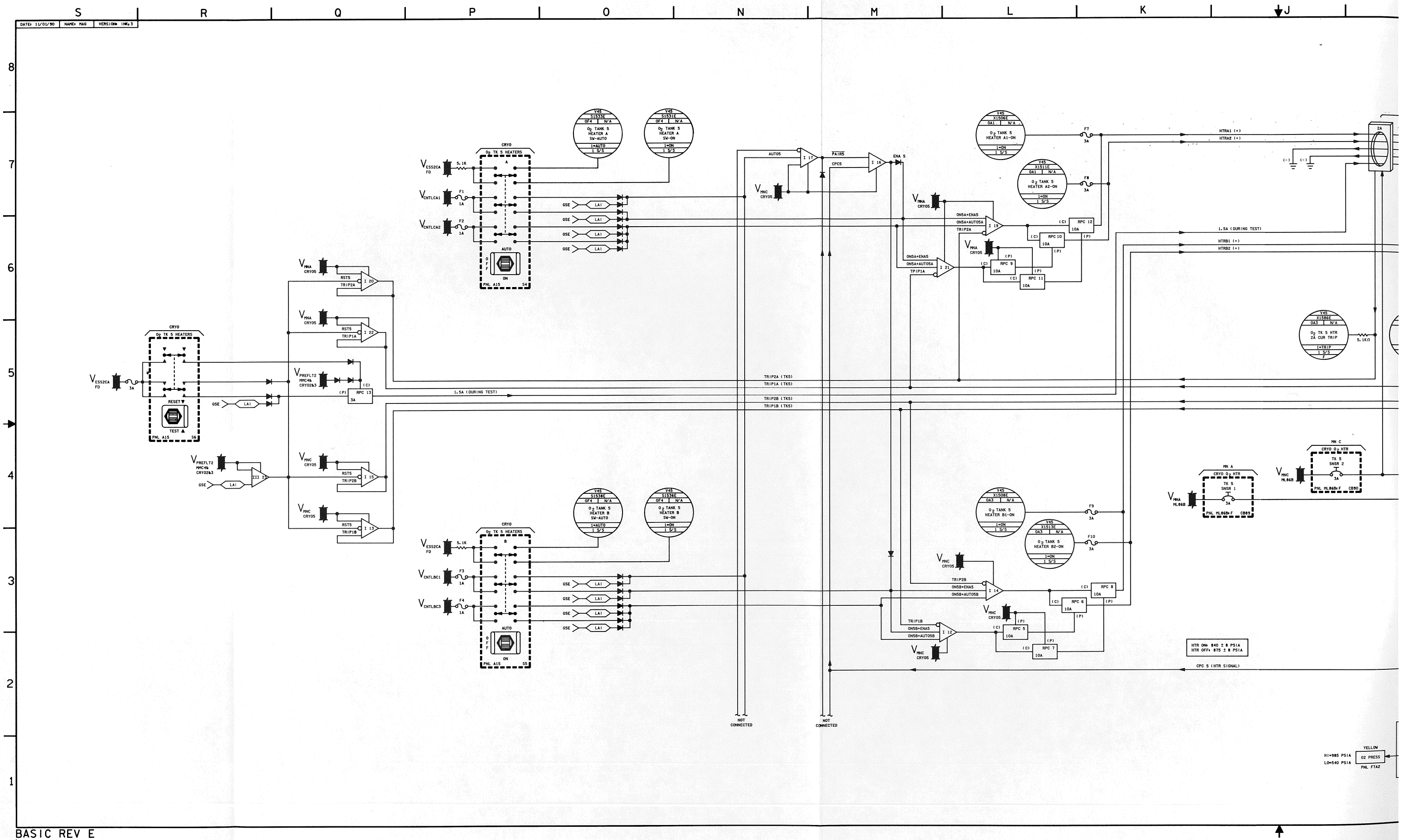
DATE: 11/01/90
NAME: MAG
VERSION: INK, 3
S
R
Q
P
O
N
M
L
K
J
8
7
6
5
4
3
2
1
CRYO
O2 TK 5 HEATERS
V45
S1533E
O2 TANK 5 HEATER A SW-AUTO
V45
S1531E
O2 TANK 5 HEATER A SW-ON
V45
X1506E
O2 TANK 5 HEATER A1-ON
V45
X1511E
O2 TANK 5 HEATER A2-ON
V45
X1586E
O2 TK 5 HTR 2A CUR TRIP
V45
S1538E
O2 TANK 5 HEATER B SW-AUTO
V45
S1536E
O2 TANK 5 HEATER B SW-ON
V45
X1508E
O2 TANK 5 HEATER B1-ON
V45
X1513E
O2 TANK 5 HEATER B2-ON
MN A
CRYO O2 HTR
TK 5 SNSR 1
MN C
CRYO O2 HTR
TK 5 SNSR 2
PNL A15
PNL ML86B
PNL ML86B+F
CB89
CB90
PNL F7A2
YELLOW
O2 PRESS
HI=985 PSIA
LO=540 PSIA
HTR ON: 840 ± 8 PSIA
HTR OFF: 875 ± 8 PSIA
CPC 5 (HTR SIGNAL)
HTRA1 (+)
HTRA2 (+)
HTRB1 (+)
HTRB2 (+)
1.5A (DURING TEST)
TRIP2A (TK5)
TRIP1A (TK5)
TRIP2B (TK5)
TRIP1B (TK5)
NOT CONNECTED
AUTO
OFF
ON
RESET
TEST
GSE
LAI
PAIRS
CPC5
ENA 5
AUTO5
RST5
TRIP2A
TRIP1A
TRIP2B
TRIP1B
ON5A+ENA5
ON5A+AUTO5A
ON5B+ENA5
ON5B+AUTO5B
RPC 13
RPC 12
RPC 10
RPC 9
RPC 11
RPC 8
RPC 6
RPC 5
RPC 7
5.1K
1A
3A
10A
5.1KΩ

BASIC REV E

BASIC REV E

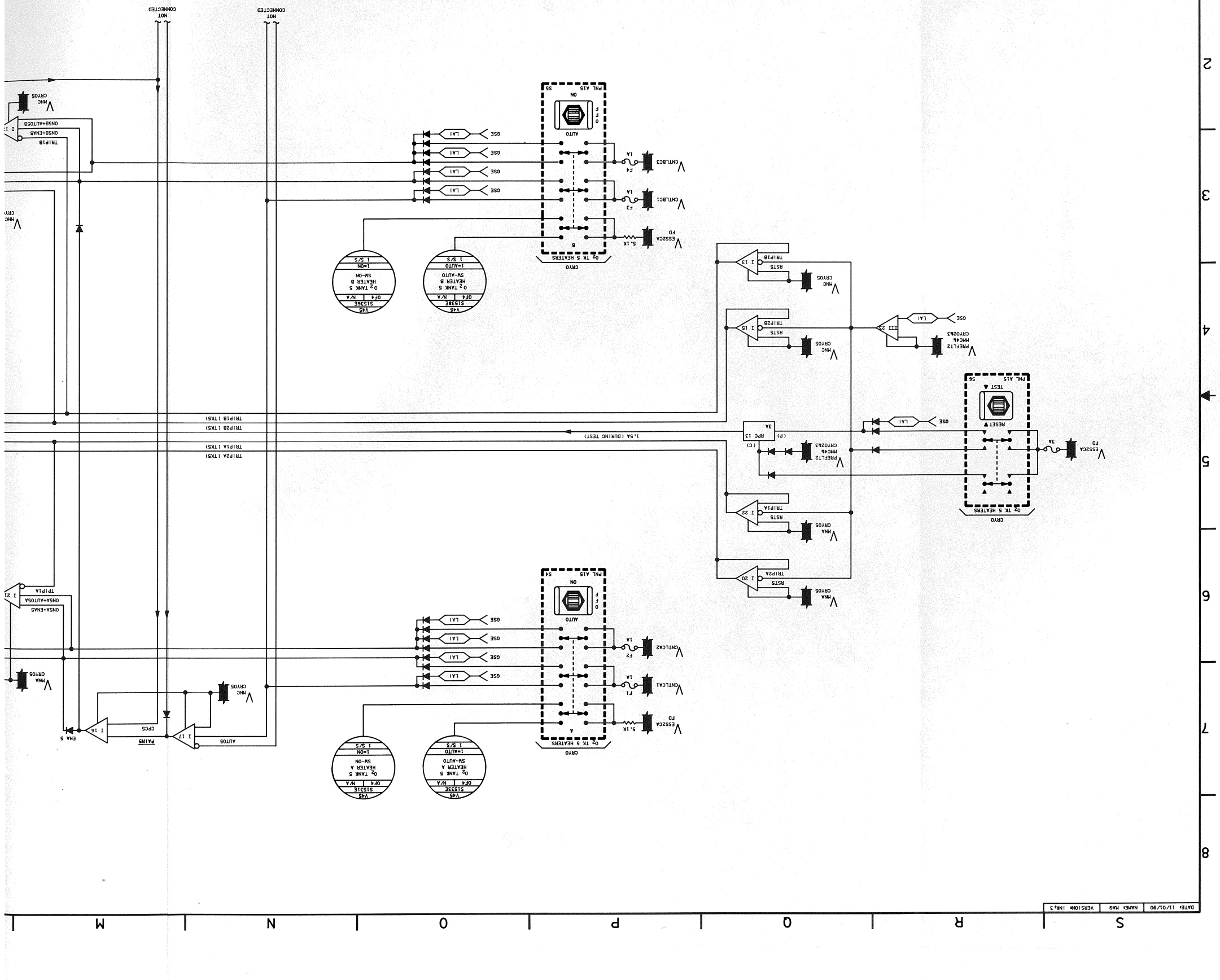

DATE: 11/01/90	NAME: MAG	VEMS10## IND: 3

DATE: 10/06/90	NAME: CAR	VERSION: INK: 1
DATE: 11/5/91	NAME: PSD	VERSION: INK: 2
DATE: 11/13/91	NAME: PSD	VERSION: INK: 3

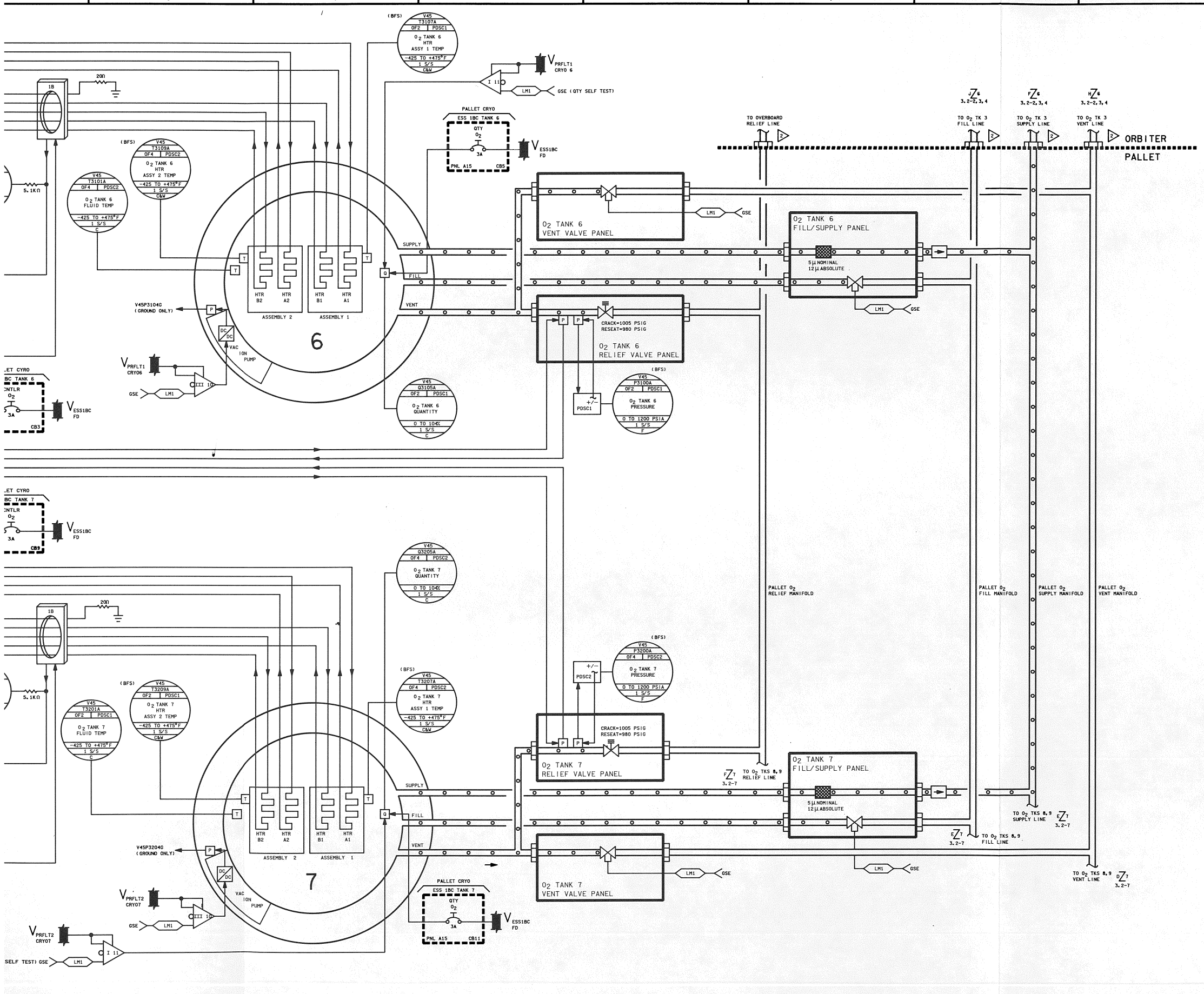

*2 O_2 CRYO 6

SIGNATURE		DATE	NATIONAL AERONAUTICS AND SPACE ADMINISTRATION LYNDON B. JOHNSON SPACE CENTER HOUSTON, TEXAS
DSGN V.S. DOGGETT		6/3/81	
DR V.S. DOGGETT		6/3/81	PALLET O_2 REACTANT TANKS 6 & 7
ENGR L.V. MINTER			
ENGR Larry Minter		11/8/91	
APP Paul D'Agosto		11/8/91	
APP			SPACE SHUTTLE
OMNIPLAN S.K.Hawkins		11/12/91	EDO: OV102 AND OV105
LTR E	PCN 1		121 X 34

DWG NO 3.2

PAGE SHEET 6 OF 7

BASIC REV E-1

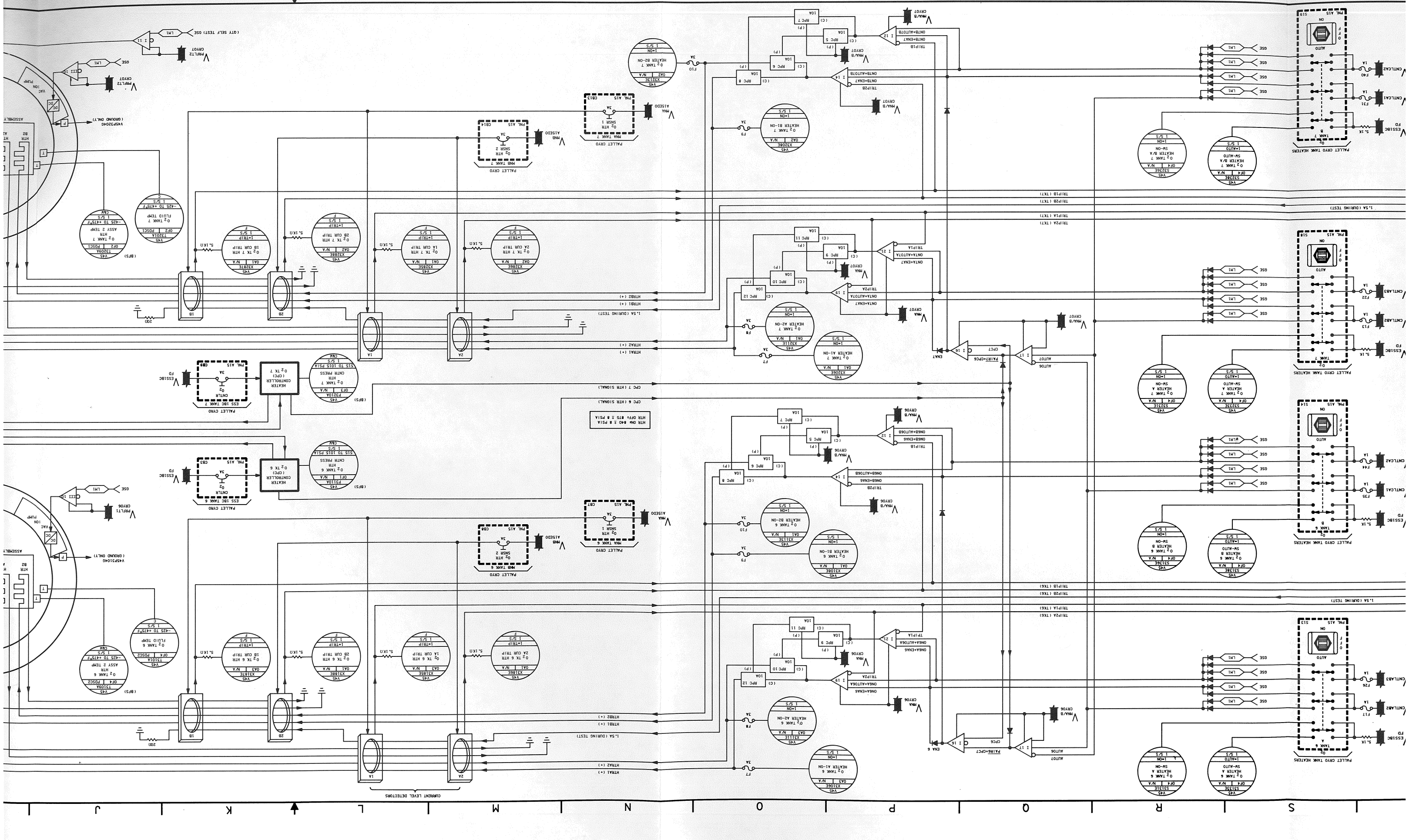
PALLET CRYO TANK HEATERS
PALLET CRYO
HEATER CONTROLLER (CPC)
ESS 18C TANK 7
ESS 18C TANK 6
(OTY SELF TEST) GSE
(GROUND ONLY) V45P320AG
ASSEMBLY
PUMP
VAC
DC
HTR B2
HTR T
HTR A1
HTR A2
HTR B1
HTR T
HTR A1
HTR A2
HTR B1
HTR B2
HTR T
HTR A1
HTR A2
HTR B1
HTR B2
HTR T
HTR A1
HTR A2
HTR B1
HTR B2

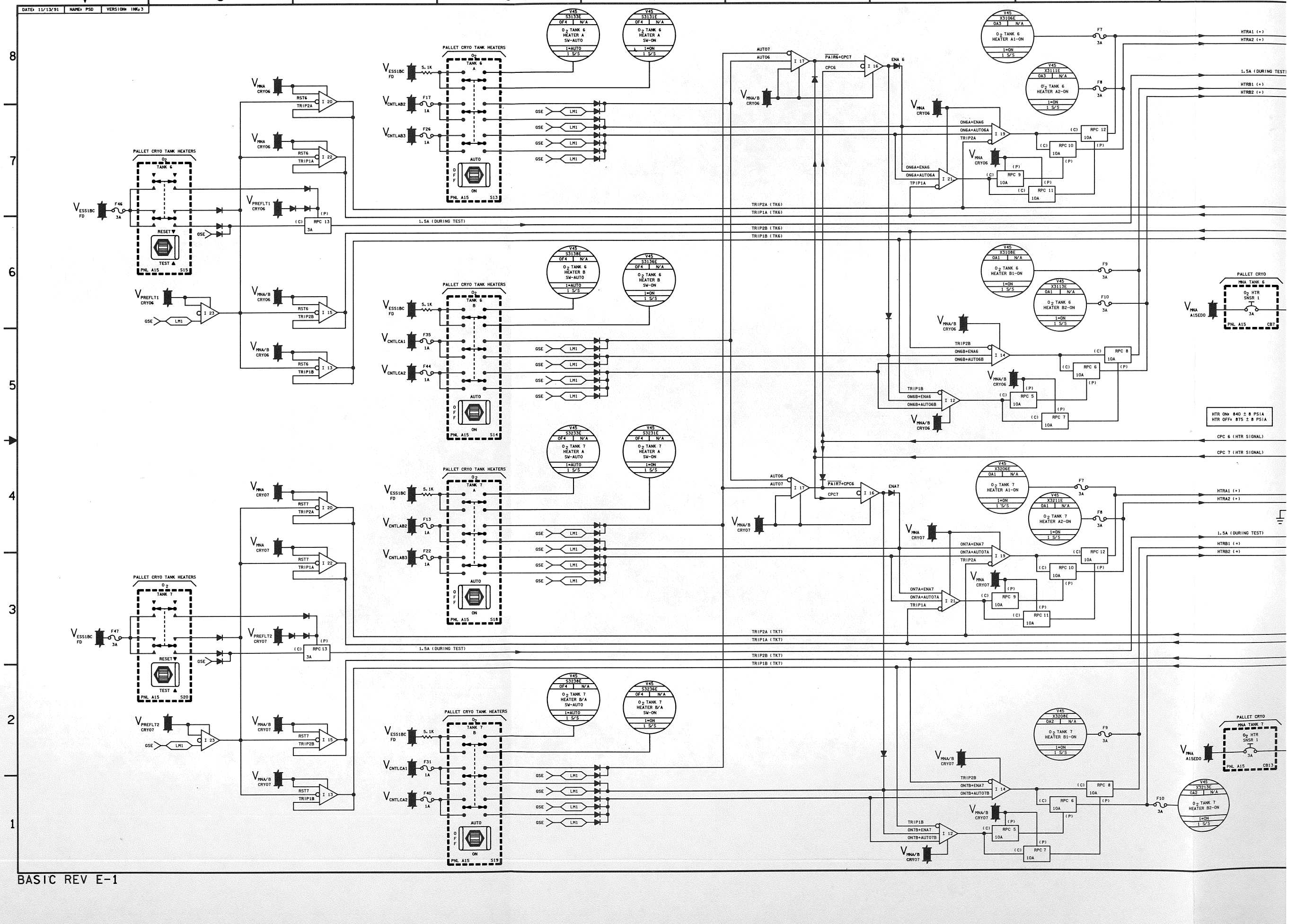
DATE: 11/13/91
NAME: PSD
VERSION: INK: 3
PALLET CRYO TANK HEATERS
1.5A (DURING TEST)
TRIP2A (TK6)
TRIP1A (TK6)
TRIP2B (TK6)
TRIP1B (TK6)
TRIP2A (TK7)
TRIP1A (TK7)
TRIP2B (TK7)
TRIP1B (TK7)
HTR ON: 840 ± 8 PSIA
HTR OFF: 875 ± 8 PSIA
CPC 6 (HTR SIGNAL)
CPC 7 (HTR SIGNAL)
HTRA1 (+)
HTRA2 (+)
HTRB1 (+)
HTRB2 (+)

BASIC REV E-1

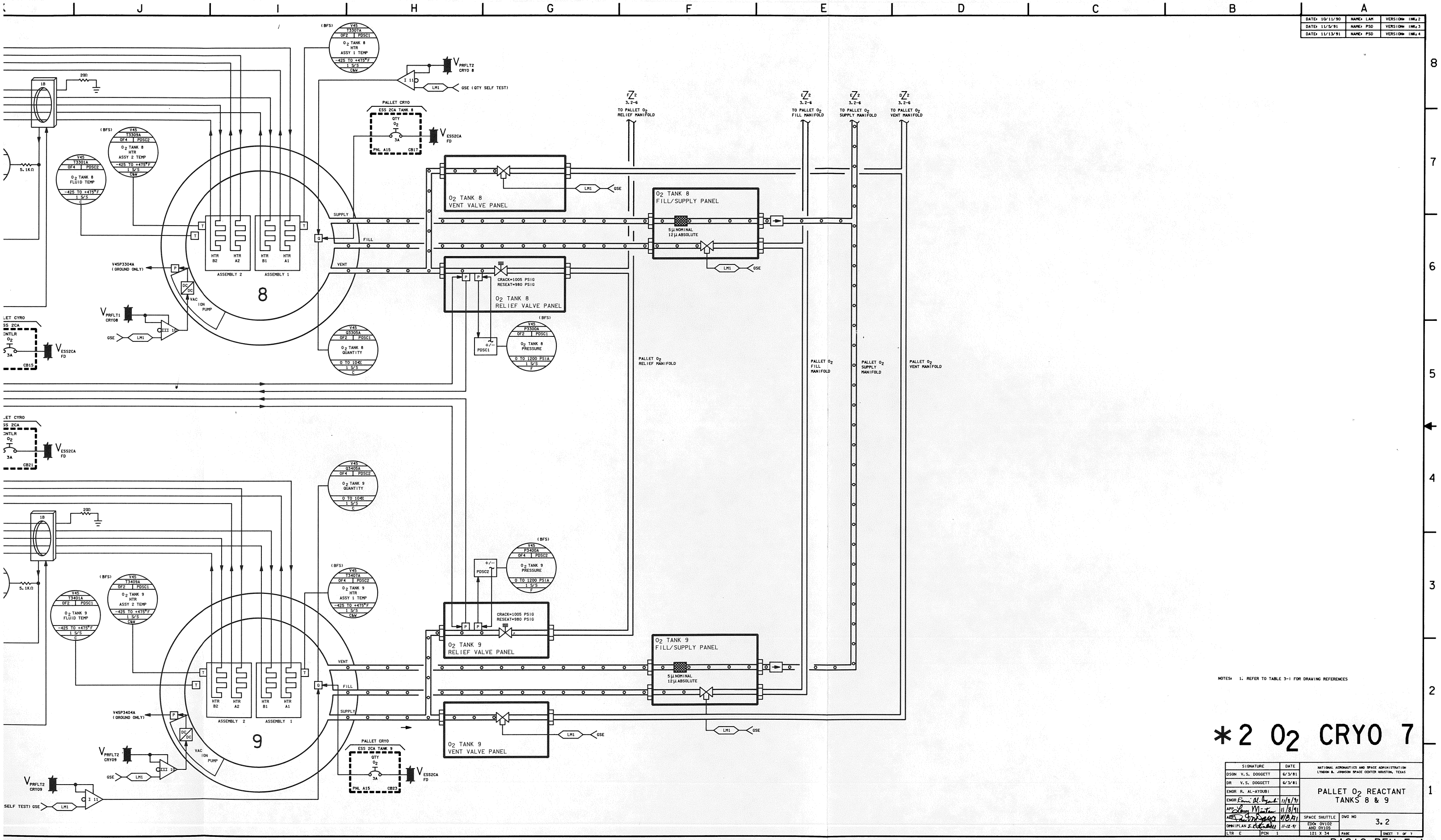

NOTES: 1. REFER TO TABLE 3-1 FOR DRAWING REFERENCES

*2 O_2 CRYO 7

SIGNATURE	DATE	NATIONAL AERONAUTICS AND SPACE ADMINISTRATION LYNDON B. JOHNSON SPACE CENTER HOUSTON, TEXAS
DSGN V.S. DOGGETT	6/3/81	PALLET O_2 REACTANT TANKS 8 & 9
DR V.S. DOGGETT	6/3/81	
ENGR R. AL-AYOUBI		
ENGR Rami Al-Ayoubi	11/8/91	
APP Larry Martin	11/8/91	
APP [signature]	11/8/91	SPACE SHUTTLE EDO OV102 AND OV105 — DWG NO 3.2
OMNIPLAN S. Kirkindall	11-12-91	
LTR E — PCN 1		121 X 34 — PAGE — SHEET 7 OF 7

BASIC REV E-1

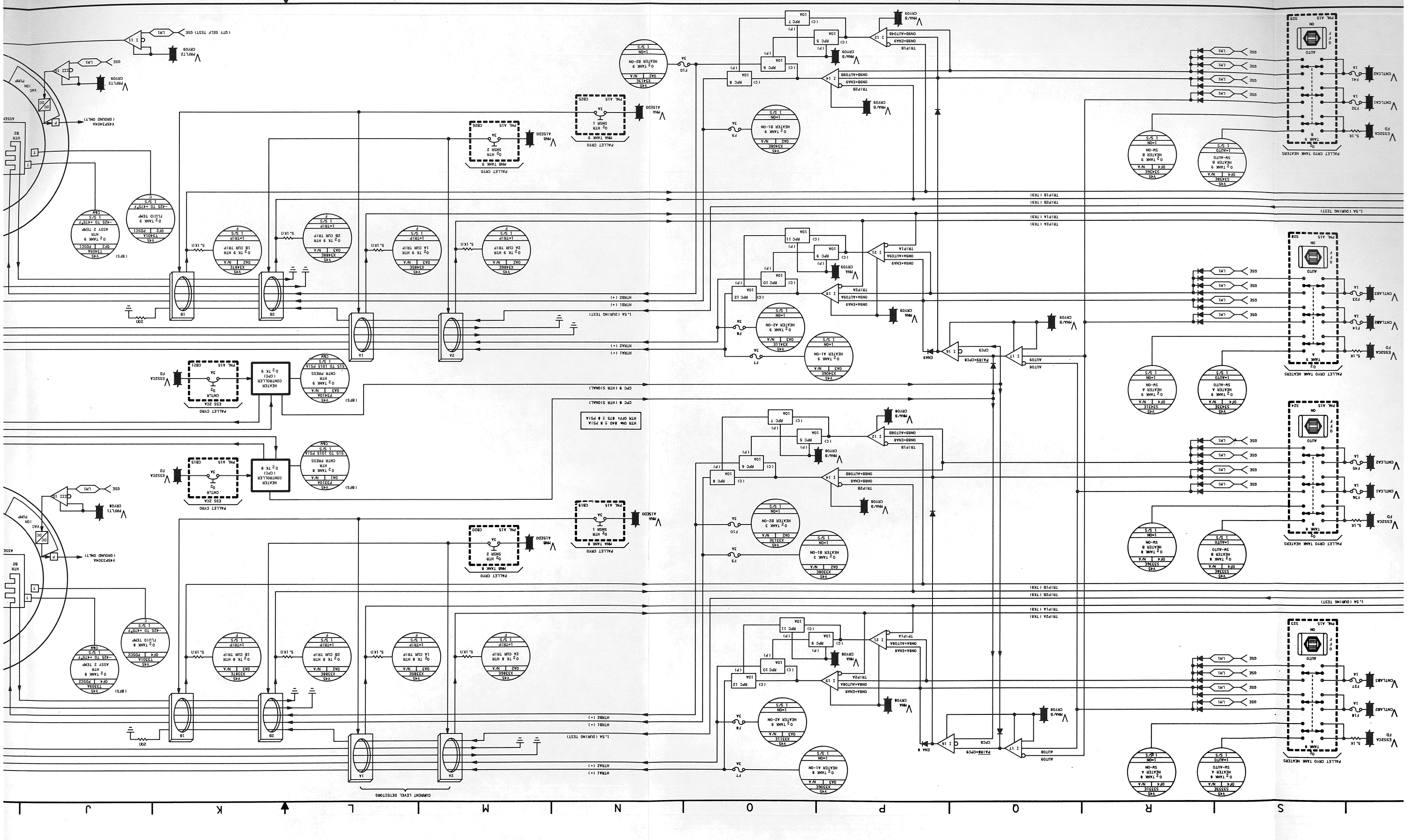
HTR ON@ 840 ± 8 PSIA
HTR OFF@ 875 ± 8 PSIA
HTRA1 (+)
HTRA2 (+)
HTRB1 (+)
HTRB2 (+)
1.5A (DURING TEST)
CHRGNT LEVEL DETECTORS
TRIP1A (TX9)
TRIP2A (TX9)
TRIP1B (TX9)
TRIP2B (TX9)
TRIP1A (TX8)
TRIP2A (TX8)
TRIP1B (TX8)
TRIP2B (TX8)
CPC 9 (HTR SIGNAL)
CPC 8 (HTR SIGNAL)
PALLET CRYO TANK HEATERS
HEATER CONTROLLER (CPC) O2 TX 8
HEATER CONTROLLER (CPC) O2 TX 9
O2 TANK 9 HEATER A1-ON
O2 TANK 9 HEATER A2-ON
O2 TANK 9 HEATER B1-ON
O2 TANK 9 HEATER B2-ON
O2 TANK 8 HEATER A1-ON
O2 TANK 8 HEATER A2-ON
O2 TANK 8 HEATER B1-ON
O2 TANK 8 HEATER B2-ON
O2 TANK 9 HEATER SW-AUTO
O2 TANK 9 HEATER SW-ON
O2 TANK 8 HEATER SW-AUTO
O2 TANK 8 HEATER SW-ON
O2 TX 9 HTR 1A CUR TRIP
O2 TX 9 HTR 1B CUR TRIP
O2 TX 9 HTR 2A CUR TRIP
O2 TX 9 HTR 2B CUR TRIP
O2 TX 8 HTR 1A CUR TRIP
O2 TX 8 HTR 1B CUR TRIP
O2 TX 8 HTR 2A CUR TRIP
O2 TX 8 HTR 2B CUR TRIP
O2 TANK 9 CNTR PRESS
O2 TANK 8 CNTR PRESS
O2 TANK 9 HTR SNSR 1
O2 TANK 9 HTR SNSR 2
O2 TANK 8 HTR SNSR 1
O2 TANK 8 HTR SNSR 2
O2 TANK 9 FLUID TEMP
O2 TANK 8 FLUID TEMP
O2 TANK 9 HTR ASSY 2 TEMP
O2 TANK 8 HTR ASSY 2 TEMP
-425 TO 475°F
ESS 22CA CNTLR
PALLET CRYO
PALLET CRYO TANK 9
PALLET CRYO TANK 8
PNA TANK 9
PNA TANK 8
PNB TANK 9
PNB TANK 8
PNA A15CDO
PNB A15DO
PNL A15
PNL A15 C825
PNL A15 C826
PNL A15 C827
PNL A15 C828
PNL A15 C829
PNL A15 C830
ESS22CA FD
ESS22CA FE
ESS22CA FF
ESS22CA FG
CNTLCA1 F32
CNTLCA2 F41
CNTLCB1 F36
CNTLCB2 F45
CNTLAB1 F27
CNTLAB2 F18
CNTLAB3 F23
CNTLAB4 F14
PAUTO1 CPC29
PAUTO2 CPC9
PAUTO3 CPC29
PAUTO4 CPC9
AUTO9
AUTO8
AUTO7
AUTO6
ENA9
ENA8
PRU/B CRYO9
PRU/B CRYO8
PRU/A CRYO9
PRU/A CRYO8
PPRL12 CRYO9
PPRL12 CRYO8
PPRL11 CRYO9
PPRL11 CRYO8
GSE
LM1
1A
2A
1B
2B
5.1K
5.1K/A
20Ω
V45 T3403A
V45 T3403B
V45 T3403C
V45 T3403D
V45 P0501
V45 P0502
V45 P0503
V45 P0504
V45 P0505
V45 P0506
V45 P0507
V45 P0508
V45 X3468E
V45 X3468F
V45 X3468G
V45 X3468H
V45 X3468J
V45 X3468K
V45 X3468L
V45 X3468M
V45 X3468N
V45 X3468P
V45 X3468Q
V45 X3468R
V45 X3468S
V45 X3468T
V45 X3468U
V45 X3468V
V45 X3468W
V45 X3468X
V45 X3468Y
V45 X3468Z
V45 X3469A
V45 X3469B
V45 X3469C
V45 X3469D
V45 X3469E
V45 X3469F
V45 X3469G
V45 X3469H
V45 X3469J
V45 X3469K
V45 X3469L
V45 X3469M
V45 X3469N
V45 X3469P
V45 X3469Q
V45 X3469R
V45 X3469S
V45 X3469T
V45 X3469U
V45 X3469V
V45 X3469W
V45 X3469X
V45 X3469Y
V45 X3469Z
V45 X3470A
V45 X3470B
V45 X3470C
V45 X3470D
V45 X3470E
V45 X3470F
V45 X3470G
V45 X3470H
V45 X3470J
V45 X3470K
V45 X3470L
V45 X3470M
V45 X3470N
V45 X3470P
V45 X3470Q
V45 X3470R
V45 X3470S
V45 X3470T
V45 X3470U
V45 X3470V
V45 X3470W
V45 X3470X
V45 X3470Y
V45 X3470Z
V45 X3471A
V45 X3471B
V45 X3471C
V45 X3471D
V45 X3471E
V45 X3471F
V45 X3471G
V45 X3471H
V45 X3471J
V45 X3471K
V45 X3471L
V45 X3471M
V45 X3471N
V45 X3471P
V45 X3471Q
V45 X3471R
V45 X3471S
V45 X3471T
V45 X3471U
V45 X3471V
V45 X3471W
V45 X3471X
V45 X3471Y
V45 X3471Z
V45 X3472A
V45 X3472B
V45 X3472C
V45 X3472D
V45 X3472E
V45 X3472F
V45 X3472G
V45 X3472H
V45 X3472J
V45 X3472K
V45 X3472L
V45 X3472M
V45 X3472N
V45 X3472P
V45 X3472Q
V45 X3472R
V45 X3472S
V45 X3472T
V45 X3472U
V45 X3472V
V45 X3472W
V45 X3472X
V45 X3472Y
V45 X3472Z
V45 X3473A
V45 X3473B
V45 X3473C
V45 X3473D
V45 X3473E
V45 X3473F
V45 X3473G
V45 X3473H
V45 X3473J
V45 X3473K
V45 X3473L
V45 X3473M
V45 X3473N
V45 X3473P
V45 X3473Q
V45 X3473R
V45 X3473S
V45 X3473T
V45 X3473U
V45 X3473V
V45 X3473W
V45 X3473X
V45 X3473Y
V45 X3473Z
V45 X3474A
V45 X3474B
V45 X3474C
V45 X3474D
V45 X3474E
V45 X3474F
V45 X3474G
V45 X3474H
V45 X3474J
V45 X3474K
V45 X3474L
V45 X3474M
V45 X3474N
V45 X3474P
V45 X3474Q
V45 X3474R
V45 X3474S
V45 X3474T
V45 X3474U
V45 X3474V
V45 X3474W
V45 X3474X
V45 X3474Y
V45 X3474Z
V45 X3475A
V45 X3475B
V45 X3475C
V45 X3475D
V45 X3475E
V45 X3475F
V45 X3475G
V45 X3475H
V45 X3475J
V45 X3475K
V45 X3475L
V45 X3475M
V45 X3475N
V45 X3475P
V45 X3475Q
V45 X3475R
V45 X3475S
V45 X3475T
V45 X3475U
V45 X3475V
V45 X3475W
V45 X3475X
V45 X3475Y
V45 X3475Z
V45 X3476A
V45 X3476B
V45 X3476C
V45 X3476D
V45 X3476E
V45 X3476F
V45 X3476G
V45 X3476H
V45 X3476J
V45 X3476K
V45 X3476L
V45 X3476M
V45 X3476N
V45 X3476P
V45 X3476Q
V45 X3476R
V45 X3476S
V45 X3476T
V45 X3476U
V45 X3476V
V45 X3476W
V45 X3476X
V45 X3476Y
V45 X3476Z
V45 X3477A
V45 X3477B
V45 X3477C
V45 X3477D
V45 X3477E
V45 X3477F
V45 X3477G
V45 X3477H
V45 X3477J
V45 X3477K
V45 X3477L
V45 X3477M
V45 X3477N
V45 X3477P
V45 X3477Q
V45 X3477R
V45 X3477S
V45 X3477T
V45 X3477U
V45 X3477V
V45 X3477W
V45 X3477X
V45 X3477Y
V45 X3477Z
V45 X3478A
V45 X3478B
V45 X3478C
V45 X3478D
V45 X3478E
V45 X3478F
V45 X3478G
V45 X3478H
V45 X3478J
V45 X3478K
V45 X3478L
V45 X3478M
V45 X3478N
V45 X3478P
V45 X3478Q
V45 X3478R
V45 X3478S
V45 X3478T
V45 X3478U
V45 X3478V
V45 X3478W
V45 X3478X
V45 X3478Y
V45 X3478Z
V45 X3479A
V45 X3479B
V45 X3479C
V45 X3479D
V45 X3479E
V45 X3479F
V45 X3479G
V45 X3479H
V45 X3479J
V45 X3479K
V45 X3479L
V45 X3479M
V45 X3479N
V45 X3479P
V45 X3479Q
V45 X3479R
V45 X3479S
V45 X3479T
V45 X3479U
V45 X3479V
V45 X3479W
V45 X3479X
V45 X3479Y
V45 X3479Z
V45 X3480A
V45 X3480B
V45 X3480C
V45 X3480D
V45 X3480E
V45 X3480F
V45 X3480G
V45 X3480H
V45 X3480J
V45 X3480K
V45 X3480L
V45 X3480M
V45 X3480N
V45 X3480P
V45 X3480Q
V45 X3480R
V45 X3480S
V45 X3480T
V45 X3480U
V45 X3480V
V45 X3480W
V45 X3480X
V45 X3480Y
V45 X3480Z
V45 X3481A
V45 X3481B
V45 X3481C
V45 X3481D
V45 X3481E
V45 X3481F
V45 X3481G
V45 X3481H
V45 X3481J
V45 X3481K
V45 X3481L
V45 X3481M
V45 X3481N
V45 X3481P
V45 X3481Q
V45 X3481R
V45 X3481S
V45 X3481T
V45 X3481U
V45 X3481V
V45 X3481W
V45 X3481X
V45 X3481Y
V45 X3481Z
V45 X3482A
V45 X3482B
V45 X3482C
V45 X3482D
V45 X3482E
V45 X3482F
V45 X3482G
V45 X3482H
V45 X3482J
V45 X3482K
V45 X3482L
V45 X3482M
V45 X3482N
V45 X3482P
V45 X3482Q
V45 X3482R
V45 X3482S
V45 X3482T
V45 X3482U
V45 X3482V
V45 X3482W
V45 X3482X
V45 X3482Y
V45 X3482Z
V45 X3483A
V45 X3483B
V45 X3483C
V45 X3483D
V45 X3483E
V45 X3483F
V45 X3483G
V45 X3483H
V45 X3483J
V45 X3483K
V45 X3483L
V45 X3483M
V45 X3483N
V45 X3483P
V45 X3483Q
V45 X3483R
V45 X3483S
V45 X3483T
V45 X3483U
V45 X3483V
V45 X3483W
V45 X3483X
V45 X3483Y
V45 X3483Z
V45 X3484A
V45 X3484B
V45 X3484C
V45 X3484D
V45 X3484E
V45 X3484F
V45 X3484G
V45 X3484H
V45 X3484J
V45 X3484K
V45 X3484L
V45 X3484M
V45 X3484N
V45 X3484P
V45 X3484Q
V45 X3484R
V45 X3484S
V45 X3484T
V45 X3484U
V45 X3484V
V45 X3484W
V45 X3484X
V45 X3484Y
V45 X3484Z
V45 X3485A
V45 X3485B
V45 X3485C
V45 X3485D
V45 X3485E
V45 X3485F
V45 X3485G
V45 X3485H
V45 X3485J
V45 X3485K
V45 X3485L
V45 X3485M
V45 X3485N
V45 X3485P
V45 X3485Q
V45 X3485R
V45 X3485S
V45 X3485T
V45 X3485U
V45 X3485V
V45 X3485W
V45 X3485X
V45 X3485Y
V45 X3485Z
V45 X3486A
V45 X3486B
V45 X3486C
V45 X3486D
V45 X3486E
V45 X3486F
V45 X3486G
V45 X3486H
V45 X3486J
V45 X3486K
V45 X3486L
V45 X3486M
V45 X3486N
V45 X3486P
V45 X3486Q
V45 X3486R
V45 X3486S
V45 X3486T
V45 X3486U
V45 X3486V
V45 X3486W
V45 X3486X
V45 X3486Y
V45 X3486Z
V45 X3487A
V45 X3487B
V45 X3487C
V45 X3487D
V45 X3487E
V45 X3487F
V45 X3487G
V45 X3487H
V45 X3487J
V45 X3487K
V45 X3487L
V45 X3487M
V45 X3487N
V45 X3487P
V45 X3487Q
V45 X3487R
V45 X3487S
V45 X3487T
V45 X3487U
V45 X3487V
V45 X3487W
V45 X3487X
V45 X3487Y
V45 X3487Z
V45 X3488A
V45 X3488B
V45 X3488C
V45 X3488D
V45 X3488E
V45 X3488F
V45 X3488G
V45 X3488H
V45 X3488J
V45 X3488K
V45 X3488L
V45 X3488M
V45 X3488N
V45 X3488P
V45 X3488Q
V45 X3488R
V45 X3488S
V45 X3488T
V45 X3488U
V45 X3488V
V45 X3488W
V45 X3488X
V45 X3488Y
V45 X3488Z
V45 X3489A
V45 X3489B
V45 X3489C
V45 X3489D
V45 X3489E
V45 X3489F
V45 X3489G
V45 X3489H
V45 X3489J
V45 X3489K
V45 X3489L
V45 X3489M
V45 X3489N
V45 X3489P
V45 X3489Q
V45 X3489R
V45 X3489S
V45 X3489T
V45 X3489U
V45 X3489V
V45 X3489W
V45 X3489X
V45 X3489Y
V45 X3489Z
V45 X3490A
V45 X3490B
V45 X3490C
V45 X3490D
V45 X3490E
V45 X3490F
V45 X3490G
V45 X3490H
V45 X3490J
V45 X3490K
V45 X3490L
V45 X3490M
V45 X3490N
V45 X3490P
V45 X3490Q
V45 X3490R
V45 X3490S
V45 X3490T
V45 X3490U
V45 X3490V
V45 X3490W
V45 X3490X
V45 X3490Y
V45 X3490Z
V45 X3491A
V45 X3491B
V45 X3491C
V45 X3491D
V45 X3491E
V45 X3491F
V45 X3491G
V45 X3491H
V45 X3491J
V45 X3491K
V45 X3491L
V45 X3491M
V45 X3491N
V45 X3491P
V45 X3491Q
V45 X3491R
V45 X3491S
V45 X3491T
V45 X3491U
V45 X3491V
V45 X3491W
V45 X3491X
V45 X3491Y
V45 X3491Z
V45 X3492A
V45 X3492B
V45 X3492C
V45 X3492D
V45 X3492E
V45 X3492F
V45 X3492G
V45 X3492H
V45 X3492J
V45 X3492K
V45 X3492L
V45 X3492M
V45 X3492N
V45 X3492P
V45 X3492Q
V45 X3492R
V45 X3492S
V45 X3492T
V45 X3492U
V45 X3492V
V45 X3492W
V45 X3492X
V45 X3492Y
V45 X3492Z
V45 X3493A
V45 X3493B
V45 X3493C
V45 X3493D
V45 X3493E
V45 X3493F
V45 X3493G
V45 X3493H
V45 X3493J
V45 X3493K
V45 X3493L
V45 X3493M
V45 X3493N
V45 X3493P
V45 X3493Q
V45 X3493R
V45 X3493S
V45 X3493T
V45 X3493U
V45 X3493V
V45 X3493W
V45 X3493X
V45 X3493Y
V45 X3493Z
V45 X3494A
V45 X3494B
V45 X3494C
V45 X3494D
V45 X3494E
V45 X3494F
V45 X3494G
V45 X3494H
V45 X3494J
V45 X3494K
V45 X3494L
V45 X3494M
V45 X3494N
V45 X3494P
V45 X3494Q
V45 X3494R
V45 X3494S
V45 X3494T
V45 X3494U
V45 X3494V
V45 X3494W
V45 X3494X
V45 X3494Y
V45 X3494Z
V45 X3495A
V45 X3495B
V45 X3495C
V45 X3495D
V45 X3495E
V45 X3495F
V45 X3495G
V45 X3495H
V45 X3495J
V45 X3495K
V45 X3495L
V45 X3495M
V45 X3495N
V45 X3495P
V45 X3495Q
V45 X3495R
V45 X3495S
V45 X3495T
V45 X3495U
V45 X3495V
V45 X3495W
V45 X3495X
V45 X3495Y
V45 X3495Z
V45 X3496A
V45 X3496B
V45 X3496C
V45 X3496D
V45 X3496E
V45 X3496F
V45 X3496G
V45 X3496H
V45 X3496J
V45 X3496K
V45 X3496L
V45 X3496M
V45 X3496N
V45 X3496P
V45 X3496Q
V45 X3496R
V45 X3496S
V45 X3496T
V45 X3496U
V45 X3496V
V45 X3496W
V45 X3496X
V45 X3496Y
V45 X3496Z
V45 X3497A
V45 X3497B
V45 X3497C
V45 X3497D
V45 X3497E
V45 X3497F
V45 X3497G
V45 X3497H
V45 X3497J
V45 X3497K
V45 X3497L
V45 X3497M
V45 X3497N
V45 X3497P
V45 X3497Q
V45 X3497R
V45 X3497S
V45 X3497T
V45 X3497U
V45 X3497V
V45 X3497W
V45 X3497X
V45 X3497Y
V45 X3497Z
V45 X3498A
V45 X3498B
V45 X3498C
V45 X3498D
V45 X3498E
V45 X3498F
V45 X3498G
V45 X3498H
V45 X3498J
V45 X3498K
V45 X3498L
V45 X3498M
V45 X3498N
V45 X3498P
V45 X3498Q
V45 X3498R
V45 X3498S
V45 X3498T
V45 X3498U
V45 X3498V
V45 X3498W
V45 X3498X
V45 X3498Y
V45 X3498Z
V45 X3499A
V45 X3499B
V45 X3499C
V45 X3499D
V45 X3499E
V45 X3499F
V45 X3499G
V45 X3499H
V45 X3499J
V45 X3499K
V45 X3499L
V45 X3499M
V45 X3499N
V45 X3499P
V45 X3499Q
V45 X3499R
V45 X3499S
V45 X3499T
V45 X3499U
V45 X3499V
V45 X3499W
V45 X3499X
V45 X3499Y
V45 X3499Z
V45 X3500A
V45 X3500B
V45 X3500C
V45 X3500D
V45 X3500E
V45 X3500F
V45 X3500G
V45 X3500H
V45 X3500J
V45 X3500K
V45 X3500L
V45 X3500M
V45 X3500N
V45 X3500P
V45 X3500Q
V45 X3500R
V45 X3500S
V45 X3500T
V45 X3500U
V45 X3500V
V45 X3500W
V45 X3500X
V45 X3500Y
V45 X3500Z
V45 X3501A
V45 X3501B
V45 X3501C
V45 X3501D
V45 X3501E
V45 X3501F
V45 X3501G
V45 X3501H
V45 X3501J
V45 X3501K
V45 X3501L
V45 X3501M
V45 X3501N
V45 X3501P
V45 X3501Q
V45 X3501R
V45 X3501S
V45 X3501T
V45 X3501U
V45 X3501V
V45 X3501W
V45 X3501X
V45 X3501Y
V45 X3501Z
V45 X3502A
V45 X3502B
V45 X3502C
V45 X3502D
V45 X3502E
V45 X3502F
V45 X3502G
V45 X3502H
V45 X3502J
V45 X3502K
V45 X3502L
V45 X3502M
V45 X3502N
V45 X3502P
V45 X3502Q
V45 X3502R
V45 X3502S
V45 X3502T
V45 X3502U
V45 X3502V
V45 X3502W
V45 X3502X
V45 X3502Y
V45 X3502Z
V45 X3503A
V45 X3503B
V45 X3503C
V45 X3503D
V45 X3503E
V45 X3503F
V45 X3503G
V45 X3503H
V45 X3503J
V45 X3503K
V45 X3503L
V45 X3503M
V45 X3503N
V45 X3503P
V45 X3503Q
V45 X3503R
V45 X3503S
V45 X3503T
V45 X3503U
V45 X3503V
V45 X3503W
V45 X3503X
V45 X3503Y
V45 X3503Z
V45 X3504A
V45 X3504B
V45 X3504C
V45 X3504D
V45 X3504E
V45 X3504F
V45 X3504G
V45 X3504H
V45 X3504J
V45 X3504K
V45 X3504L
V45 X3504M
V45 X3504N
V45 X3504P
V45 X3504Q
V45 X3504R
V45 X3504S
V45 X3504T
V45 X3504U
V45 X3504V
V45 X3504W
V45 X3504X
V45 X3504Y
V45 X3504Z
V45 X3505A
V45 X3505B
V45 X3505C
V45 X3505D
V45 X3505E
V45 X3505F
V45 X3505G
V45 X3505H
V45 X3505J
V45 X3505K
V45 X3505L
V45 X3505M
V45 X3505N
V45 X3505P
V45 X3505Q
V45 X3505R
V45 X3505S
V45 X3505T
V45 X3505U
V45 X3505V
V45 X3505W
V45 X3505X
V45 X3505Y
V45 X3505Z
V45 X3506A
V45 X3506B
V45 X3506C
V45 X3506D
V45 X3506E
V45 X3506F
V45 X3506G
V45 X3506H
V45 X3506J
V45 X3506K
V45 X3506L
V45 X3506M
V45 X3506N
V45 X3506P
V45 X3506Q
V45 X3506R
V45 X3506S
V45 X3506T
V45 X3506U
V45 X3506V
V45 X3506W
V45 X3506X
V45 X3506Y
V45 X3506Z
V45 X3507A
V45 X3507B
V45 X3507C
V45 X3507D
V45 X3507E
V45 X3507F
V45 X3507G
V45 X3507H
V45 X3507J
V45 X3507K
V45 X3507L
V45 X3507M
V45 X3507N
V45 X3507P
V45 X3507Q
V45 X3507R
V45 X3507S
V45 X3507T
V45 X3507U
V45 X3507V
V45 X3507W
V45 X3507X
V45 X3507Y
V45 X3507Z
V45 X3508A
V45 X3508B
V45 X3508C
V45 X3508D
V45 X3508E
V45 X3508F
V45 X3508G
V45 X3508H
V45 X3508J
V45 X3508K
V45 X3508L
V45 X3508M
V45 X3508N
V45 X3508P
V45 X3508Q
V45 X3508R
V45 X3508S
V45 X3508T
V45 X3508U
V45 X3508V
V45 X3508W
V45 X3508X
V45 X3508Y
V45 X3508Z
V45 X3509A
V45 X3509B
V45 X3509C
V45 X3509D
V45 X3509E
V45 X3509F
V45 X3509G
V45 X3509H
V45 X3509J
V45 X3509K
V45 X3509L
V45 X3509M
V45 X3509N
V45 X3509P
V45 X3509Q
V45 X3509R
V45 X3509S
V45 X3509T
V45 X3509U
V45 X3509V
V45 X3509W
V45 X3509X
V45 X3509Y
V45 X3509Z
V45 X3510A
V45 X3510B
V45 X3510C
V45 X3510D
V45 X3510E
V45 X3510F
V45 X3510G
V45 X3510H
V45 X3510J
V45 X3510K
V45 X3510L
V45 X3510M
V45 X3510N
V45 X3510P
V45 X3510Q
V45 X3510R
V45 X3510S
V45 X3510T
V45 X3510U
V45 X3510V
V45 X3510W
V45 X3510X
V45 X3510Y
V45 X3510Z
V45 X3511A
V45 X3511B
V45 X3511C
V45 X3511D
V45 X3511E
V45 X3511F
V45 X3511G
V45 X3511H
V45 X3511J
V45 X3511K
V45 X3511L
V45 X3511M
V45 X3511N
V45 X3511P
V45 X3511Q
V45 X3511R
V45 X3511S
V45 X3511T
V45 X3511U
V45 X3511V
V45 X3511W
V45 X3511X
V45 X3511Y
V45 X3511Z
V45 X3512A
V45 X3512B
V45 X3512C
V45 X3512D
V45 X3512E
V45 X3512F
V45 X3512G
V45 X3512H
V45 X3512J
V45 X3512K
V45 X3512L
V45 X3512M
V45 X3512N
V45 X3512P
V45 X3512Q
V45 X3512R
V45 X3512S
V45 X3512T
V45 X3512U
V45 X3512V
V45 X3512W
V45 X3512X
V45 X3512Y
V45 X3512Z
V45 X3513A
V45 X3513B
V45 X3513C
V45 X3513D
V45 X3513E
V45 X3513F
V45 X3513G
V45 X3513H
V45 X3513J
V45 X3513K
V45 X3513L
V45 X3513M
V45 X3513N
V45 X3513P
V45 X3513Q
V45 X3513R
V45 X3513S
V45 X3513T
V45 X3513U
V45 X3513V
V45 X3513W
V45 X3513X
V45 X3513Y
V45 X3513Z
V45 X3514A
V45 X3514B
V45 X3514C
V45 X3514D
V45 X3514E
V45 X3514F
V45 X3514G
V45 X3514H
V45 X3514J
V45 X3514K
V45 X3514L
V45 X3514M
V45 X3514N
V45 X3514P
V45 X3514Q
V45 X3514R
V45 X3514S
V45 X3514T
V45 X3514U
V45 X3514V
V45 X3514W
V45 X3514X
V45 X3514Y
V45 X3514Z
V45 X3515A
V45 X3515B
V45 X3515C
V45 X3515D
V45 X3515E
V45 X3515F
V45 X3515G
V45 X3515H
V45 X3515J
V45 X3515K
V45 X3515L
V45 X3515M
V45 X3515N
V45 X3515P
V45 X3515Q
V45 X3515R
V45 X3515S
V45 X3515T
V45 X3515U
V45 X3515V
V45 X3515W
V45 X3515X
V45 X3515Y
V45 X3515Z
V45 X3516A
V45 X3516B
V45 X3516C
V45 X3516D
V45 X3516E
V45 X3516F
V45 X3516G
V45 X3516H
V45 X3516J
V45 X3516K
V45 X3516L
V45 X3516M
V45 X3516N
V45 X3516P
V45 X3516Q
V45 X3516R
V45 X3516S
V45 X3516T
V45 X3516U
V45 X3516V
V45 X3516W
V45 X3516X
V45 X3516Y
V45 X3516Z
V45 X3517A
V45 X3517B
V45 X3517C
V45 X3517D
V45 X3517E
V45 X3517F
V45 X3517G
V45 X3517H
V45 X3517J
V45 X3517K
V45 X3517L
V45 X3517M
V45 X3517N
V45 X3517P
V45 X3517Q
V45 X3517R
V45 X3517S
V45 X3517T
V45 X3517U
V45 X3517V
V45 X3517W
V45 X3517X
V45 X3517Y
V45 X3517Z
V45 X3518A
V45 X3518B
V45 X3518C
V45 X3518D
V45 X3518E
V45 X3518F
V45 X3518G
V45 X3518H
V45 X3518J
V45 X3518K
V45 X3518L
V45 X3518M
V45 X3518N
V45 X3518P
V45 X3518Q
V45 X3518R
V45 X3518S
V45 X3518T
V45 X3518U
V45 X3518V
V45 X3518W
V45 X3518X
V45 X3518Y
V45 X3518Z
V45 X3519A
V45 X3519B
V45 X3519C
V45 X3519D
V45 X3519E
V45 X3519F
V45 X3519G
V45 X3519H
V45 X3519J
V45 X3519K
V45 X3519L
V45 X3519M
V45 X3519N
V45 X3519P
V45 X3519Q
V45 X3519R
V45 X3519S
V45 X3519T
V45 X3519U
V45 X3519V
V45 X3519W
V45 X3519X
V45 X3519Y
V45 X3519Z
V45 X3520A
V45 X3520B
V45 X3520C
V45 X3520D
V45 X3520E
V45 X3520F
V45 X3520G
V45 X3520H
V45 X3520J
V45 X3520K
V45 X3520L
V45 X3520M
V45 X3520N
V45 X3520P
V45 X3520Q
V45 X3520R
V45 X3520S
V45 X3520T
V45 X3520U
V45 X3520V
V45 X3520W
V45 X3520X
V45 X3520Y
V45 X3520Z
V45 X3521A
V45 X3521B
V45 X3521C
V45 X3521D
V45 X3521E
V45 X3521F
V45 X3521G
V45 X3521H
V45 X3521J
V45 X3521K
V45 X3521L
V45 X3521M
V45 X3521N
V45 X3521P
V45 X3521Q
V45 X3521R
V45 X3521S
V45 X3521T
V45 X3521U
V45 X3521V
V45 X3521W
V45 X3521X
V45 X3521Y
V45 X3521Z
V45 X3522A
V45 X3522B
V45 X3522C
V45 X3522D
V45 X3522E
V45 X3522F
V45 X3522G
V45 X3522H
V45 X3522J
V45 X3522K
V45 X3522L
V45 X3522M
V45 X3522N
V45 X3522P
V45 X3522Q
V45 X3522R
V45 X3522S
V45 X3522T
V45 X3522U
V45 X3522V
V45 X3522W
V45 X3522X
V45 X3522Y
V45 X3522Z
V45 X3523A
V45 X3523B
V45 X3523C
V45 X3523D
V45 X3523E
V45 X3523F
V45 X3523G
V45 X3523H
V45 X3523J
V45 X3523K
V45 X3523L
V45 X3523M
V45 X3523N
V45 X3523P
V45 X3523Q
V45 X3523R
V45 X3523S
V45 X3523T
V45 X3523U
V45 X3523V
V45 X3523W
V45 X3523X
V45 X3523Y
V45 X3523Z
V45 X3524A
V45 X3524B
V45 X3524C
V45 X3524D
V45 X3524E
V45 X3524F
V45 X3524G
V45 X3524H
V45 X3524J
V45 X3524K
V45 X3524L
V45 X3524M
V45 X3524N
V45 X3524P
V45 X3524Q
V45 X3524R
V45 X3524S
V45 X3524T
V45 X3524U
V45 X3524V
V45 X3524W
V45 X3524X
V45 X3524Y
V45 X3524Z
V45 X3525A
V45 X3525B
V45 X3525C
V45 X3525D
V45 X3525E
V45 X3525F
V45 X3525G
V45 X3525H
V45 X3525J
V45 X3525K
V45 X3525L
V45 X3525M
V45 X3525N
V45 X3525P
V45 X3525Q
V45 X3525R
V45 X3525S
V45 X3525T
V45 X3525U
V45 X3525V
V45 X3525W
V45 X3525X
V45 X3525Y
V45 X3525Z
V45 X3526A
V45 X3526B
V45 X3526C
V45 X3526D
V45 X3526E
V45 X3526F
V45 X3526G
V45 X3526H
V45 X3526J
V45 X3526K
V45 X3526L
V45 X3526M
V45 X3526N
V45 X3526P
V45 X3526Q
V45 X3526R
V45 X3526S
V45 X3526T
V45 X3526U
V45 X3526V
V45 X3526W
V45 X3526X
V45 X3526Y
V45 X3526Z
V45 X3527A
V45 X3527B
V45 X3527C
V45 X3527D
V45 X3527E
V45 X3527F
V45 X3527G
V45 X3527H
V45 X3527J
V45 X3527K
V45 X3527L
V45 X3527M
V45 X3527N
V45 X3527P
V45 X3527Q
V45 X3527R
V45 X3527S
V45 X3527T
V45 X3527U
V45 X3527V
V45 X3527W
V45 X3527X
V45 X3527Y
V45 X3527Z
V45 X3528A
V45 X3528B
V45 X3528C
V45 X3528D
V45 X3528E
V45 X3528F
V45 X3528G
V45 X3528H
V45 X3528J
V45 X3528K
V45 X3528L
V45 X3528M
V45 X3528N
V45 X3528P
V45 X3528Q
V45 X3528R
V45 X3528S
V45 X3528T
V45 X3528U
V45 X3528V
V45 X3528W
V45 X3528X
V45 X3528Y
V45 X3528Z
V45 X3529A
V45 X3529B
V45 X3529C
V45 X3529D
V45 X3529E
V45 X3529F
V45 X3529G
V45 X3529H
V45 X3529J
V45 X3529K
V45 X3529L
V45 X3529M
V45 X3529N
V45 X3529P
V45 X3529Q
V45 X3529R
V45 X3529S
V45 X3529T
V45 X3529U
V45 X3529V
V45 X3529W
V45 X3529X
V45 X3529Y
V45 X3529Z
V45 X3530A
V45 X3530B
V45 X3530C
V45 X3530D
V45 X3530E
V45 X3530F
V45 X3530G
V45 X3530H
V45 X3530J
V45 X3530K
V45 X3530L
V45 X3530M
V45 X3530N
V45 X3530P
V45 X3530Q
V45 X3530R
V45 X3530S
V45 X3530T
V45 X3530U
V45 X3530V
V45 X3530W
V45 X3530X
V45 X3530Y
V45 X3530Z
V45 X3531A
V45 X3531B
V45 X3531C
V45 X3531D
V45 X3531E
V45 X3531F
V45 X3531G
V45 X3531H
V45 X3531J
V45 X3531K
V45 X3531L
V45 X3531M
V45 X3531N
V45 X3531P
V45 X3531Q
V45 X3531R
V45 X3531S
V45 X3531T
V45 X3531U
V45 X3531V
V45 X3531W
V45 X3531X
V45 X3531Y
V45 X3531Z
V45 X3532A
V45 X3532B
V45 X3532C
V45 X3532D
V45 X3532E
V45 X3532F
V45 X3532G
V45 X3532H
V45 X3532J
V45 X3532K
V45 X3532L
V45 X3532M
V45 X3532N
V45 X3532P
V45 X3532Q
V45 X3532R
V45 X3532S
V45 X3532T
V45 X3532U
V45 X3532V
V45 X3532W
V45 X3532X
V45 X3532Y
V45 X3532Z
V45 X3533A
V45 X3533B
V45 X3533C
V45 X3533D
V45 X3533E
V45 X3533F
V45 X3533G
V45 X3533H
V45 X3533J
V45 X3533K
V45 X3533L
V45 X3533M
V45 X3533N
V45 X3533P
V45 X3533Q
V45 X3533R
V45 X3533S
V45 X3533T
V45 X3533U
V45 X3533V
V45 X3533W
V45 X3533X
V45 X3533Y
V45 X3533Z
V45 X3534A
V45 X3534B
V45 X3534C
V45 X3534D
V45 X3534E
V45 X3534F
V45 X3534G
V45 X3534H
V45 X3534J
V45 X3534K
V45 X3534L
V45 X3534M
V45 X3534N
V45 X3534P
V45 X3534Q
V45 X3534R
V45 X3534S
V45 X3534T
V45 X3534U
V45 X3534V
V45 X3534W
V45 X3534X
V45 X3534Y
V45 X3534Z
V45 X3535A
V45 X3535B
V45 X3535C
V45 X3535D
V45 X3535E
V45 X3535F
V45 X3535G
V45 X3535H
V45 X3535J
V45 X3535K
V45 X3535L
V45 X3535M
V45 X3535N
V45 X3535P
V45 X3535Q
V45 X3535R
V45 X3535S
V45 X3535T
V45 X3535U
V45 X3535V
V45 X3535W
V45 X3535X
V45 X3535Y
V45 X3535Z
V45 X3536A
V45 X3536B
V45 X3536C
V45 X3536D
V45 X3536E
V45 X3536F
V45 X3536G
V45 X3536H
V45 X3536J
V45 X3536K
V45 X3536L
V45 X3536M
V45 X3536N
V45 X3536P
V45 X3536Q
V45 X3536R
V45 X3536S
V45 X3536T
V45 X3536U
V45 X3536V
V45 X3536W
V45 X3536X
V45 X3536Y
V45 X3536Z
V45 X3537A
V45 X3537B
V45 X3537C
V45 X3537D
V45 X3537E
V45 X3537F
V45 X3537G
V45 X3537H
V45 X3537J
V45 X3537K
V45 X3537L
V45 X3537M
V45 X3537N
V45 X3537P
V45 X3537Q
V45 X3537R
V45 X3537S
V45 X3537T
V45 X3537U
V45 X3537V
V45 X3537W
V45 X3537X
V45 X3537Y
V45 X3537Z
V45 X3538A
V45 X3538B
V45 X3538C
V45 X3538D
V45 X3538E
V45 X3538F
V45 X3538G
V45 X3538H
V45 X3538J
V45 X3538K
V45 X3538L
V45 X3538M
V45 X3538N
V45 X3538P
V45 X3538Q
V45 X3538R
V45 X3538S
V45 X3538T
V45 X3538U
V45 X3538V
V45 X3538W
V45 X3538X
V45 X3538Y
V45 X3538Z
V45 X3539A
V45 X3539B
V45 X3539C
V45 X3539D
V45 X3539E
V45 X3539F
V45 X3539G
V45 X3539H
V45 X3539J
V45 X3539K
V45 X3539L
V45 X3539M
V45 X3539N
V45 X3539P
V45 X3539Q
V45 X3539R
V45 X3539S
V45 X3539T
V45 X3539U
V45 X3539V
V45 X3539W
V45 X3539X
V45 X3539Y
V45 X3539Z
V45 X3540A
V45 X3540B
V45 X3540C
V45 X3540D
V45 X3540E
V45 X3540F
V45 X3540G
V45 X3540H
V45 X3540J
V45 X3540K
V45 X3540L
V45 X3540M
V45 X3540N
V45 X3540P
V45 X3540Q
V45 X3540R
V45 X3540S
V45 X3540T
V45 X3540U
V45 X3540V
V45 X3540W
V45 X3540X
V45 X3540Y
V45 X3540Z
V45 X3541A
V45 X3541B
V45 X3541C
V45 X3541D
V45 X3541E
V45 X3541F
V45 X3541G
V45 X3541H
V45 X3541J
V45 X3541K
V45 X3541L
V45 X3541M
V45 X3541N
V45 X3541P
V45 X3541Q
V45 X3541R
V45 X3541S
V45 X3541T
V45 X3541U
V45 X3541V
V45 X3541W
V45 X3541X
V45 X3541Y
V45 X3541Z
V45 X3542A
V45 X3542B
V45 X3542C
V45 X3542

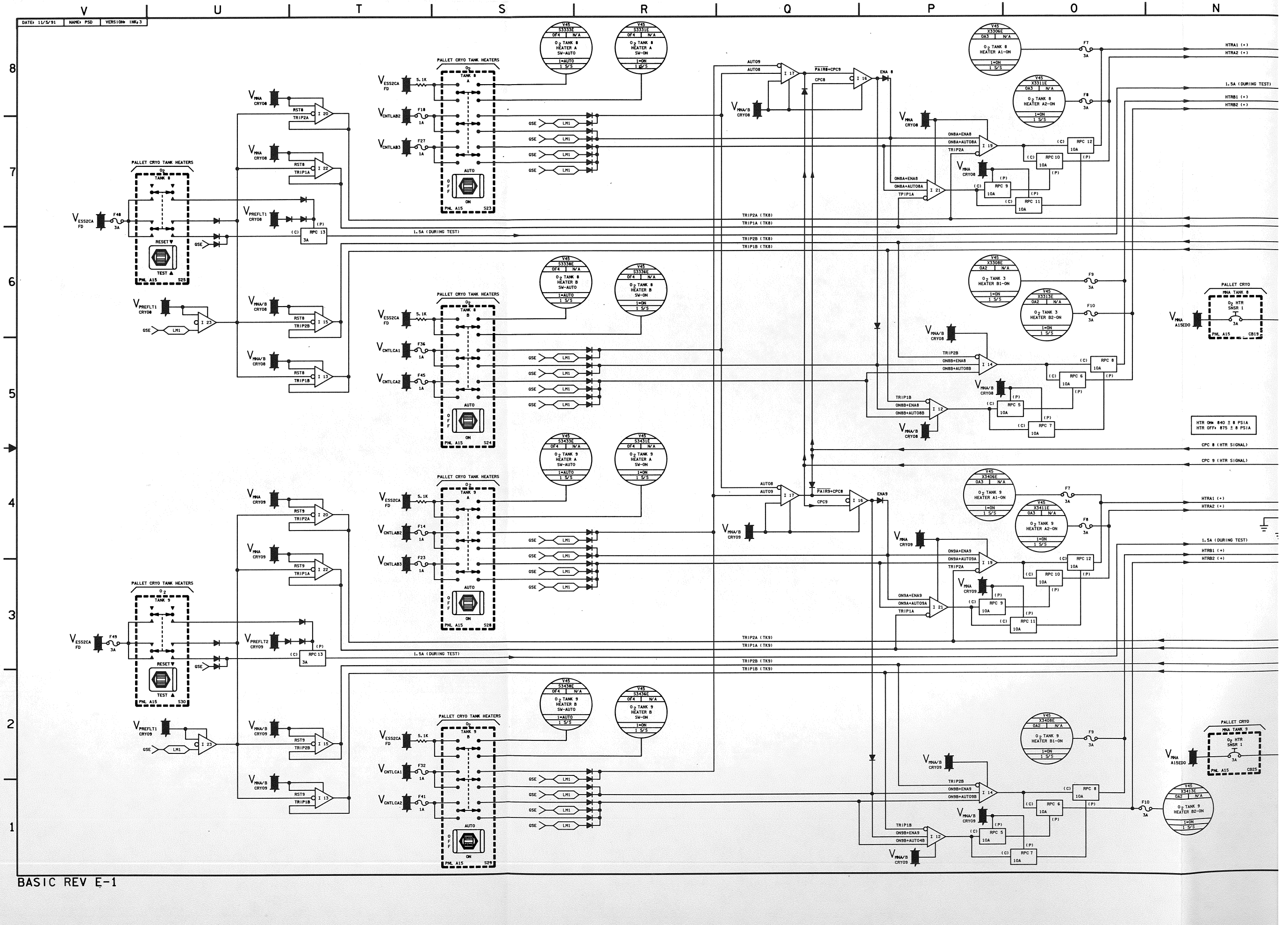
DATE: 11/5/91
NAME: PSD
VERSION: INK,3
PALLET CRYO TANK HEATERS
PALLET CRYO
1.5A (DURING TEST)
TRIP2A (TK8)
TRIP1A (TK8)
TRIP2B (TK8)
TRIP1B (TK8)
TRIP2A (TK9)
TRIP1A (TK9)
TRIP2B (TK9)
TRIP1B (TK9)
HTR ON: 840 ± 8 PSIA
HTR OFF: 875 ± 8 PSIA
CPC 8 (HTR SIGNAL)
CPC 9 (HTR SIGNAL)
HTRA1 (+)
HTRA2 (+)
HTRB1 (+)
HTRB2 (+)

BASIC REV E-1

DATE: 10/13/90	NAME: JHL	VERSION: INK: 4
DATE: 10/17/91	NAME: JMB	VERSION: BPT: 14
DATE: 10/28/91	NAME: LAM	VERSION: INK: 5

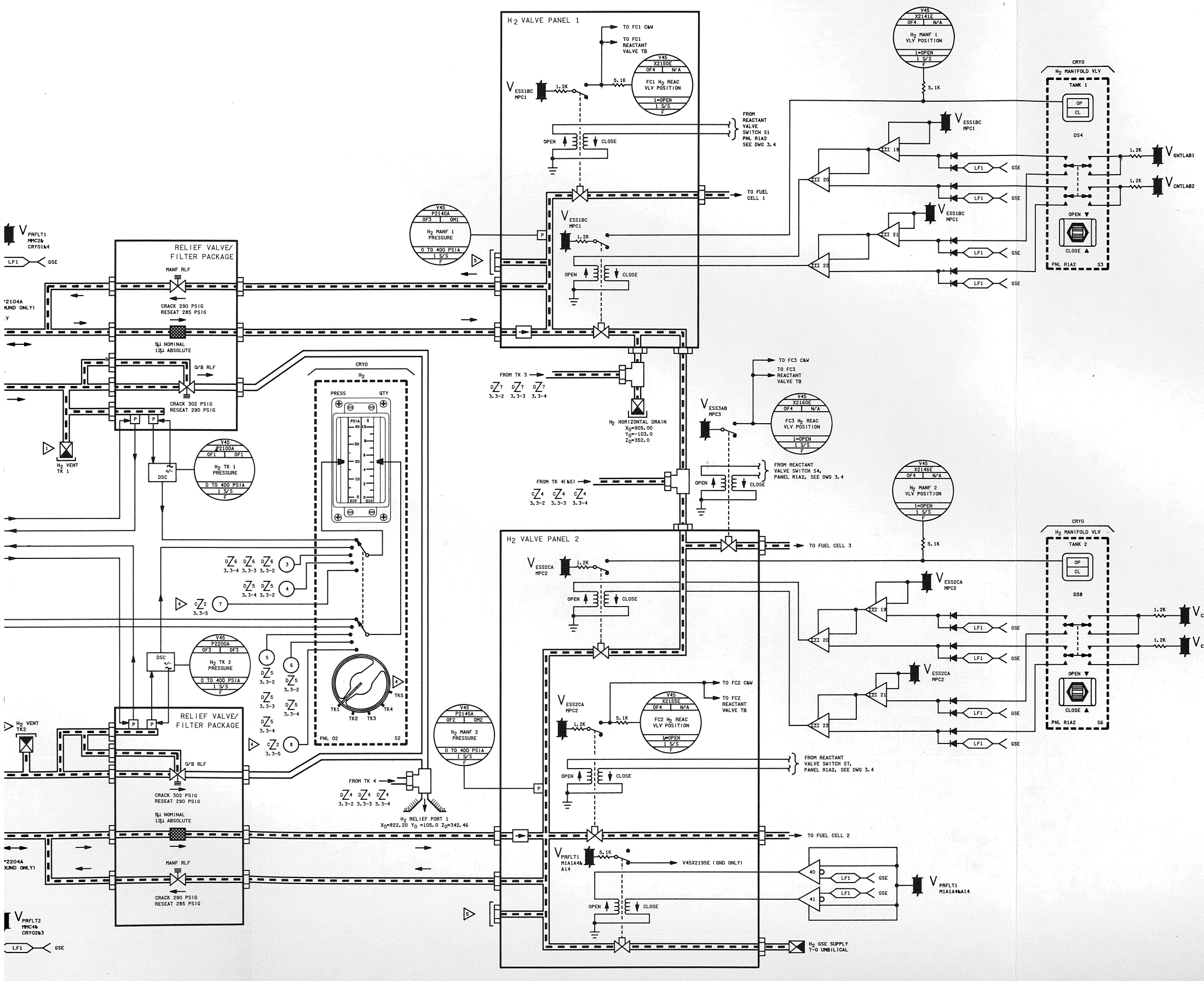

ORBITER PRSD SYSTEM SURFACE PENETRATIONS

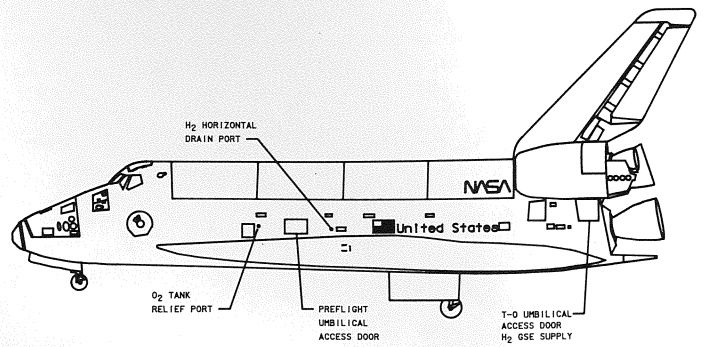

LEFT SIDE VIEW

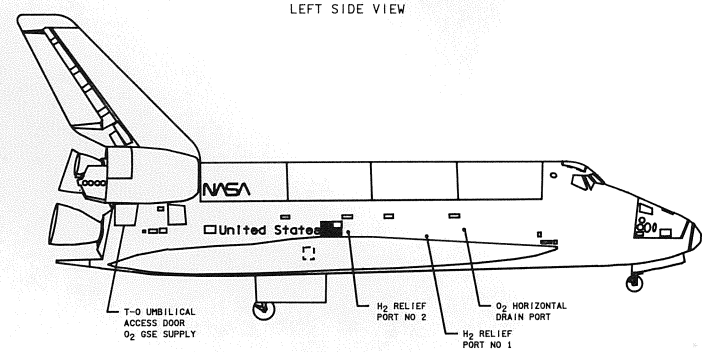

RIGHT SIDE VIEW

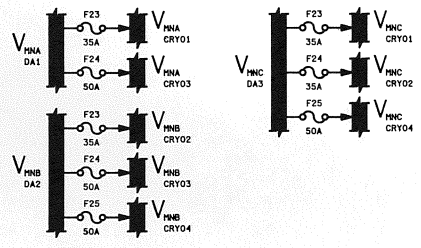

5. TYPE I

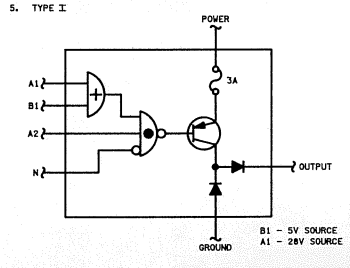

TYPE III

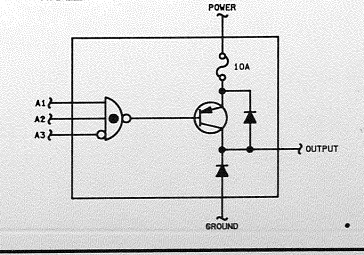

- B NOT USED
- 4 0V 10S ONLY
- 3. REFER TO TABLE 3-I FOR DRAWING REFERENCES
- 2 DELETED
- NOTES: 1 ALL FILL PORTS AND FILL VENTS ARE LOCATED BEHIND THE PREFLIGHT UMBILICAL ACCESS DOOR

DRAWING APPLICABILITY MATRIX

DWG NUMBERS \ NO OF TANK SETS	2	3	4	5
3.3 SHEET 1	X	X	X	X
3.3 SHEET 2			X	
3.3 SHEET 3		X		
3.3 SHEET 4				X
3.3 SHEET 5				X

*3 H_2 CRYO 1

SIGNATURE		DATE	NATIONAL AERONAUTICS AND SPACE ADMINISTRATION LYNDON B. JOHNSON SPACE CENTER HOUSTON, TEXAS	
DSGN	L.H. BUCHANAN	12-13-78		
DR	T.L. FORSYTHE	4-23-81		
ENGR	S.R. HIRSHORN		H_2 REACTANT STORAGE TANKS 1 & 2	
ENGR	[signature]	11/5/91		
APP	[signature]	11/5/91		
APP			SPACE SHUTTLE	DWG NO 3.3
OMNIPLAN	S.K. Kimbrew	11-12-91	ALL	
LTR E	PCN 1		104.5 X 34	PAGE SHEET 1 OF 7

BASIC REV E-1

DATE: 10/29/91 | NAME: LAM | VERSION: INK45

S R Q P O N M L K J

8 7 6 5 4 3 2 1

CRYO H_2 TK 1 HEATERS A

V_{ESS2CA} FD 5.1K

$V_{CNTLCA1}$ F5 1A

$V_{CNTLCA2}$ F6 1A

GSE LA1 (×4)

AUTO OFF ON

PNL R1A2 S11

V45 S2133E OF4 N/A — H_2 TK 1 HTR A SW-AUTO — 1=AUTO 1 S/S

V45 S2131E OF4 N/A — H_2 TK 1 HTR A SW-ON — 1=ON 1 S/S

CRYO H_2 TK 1 HEATERS B

V_{ESS2CA} FD 5.1K

$V_{CNTLAB1}$ F7 1A

$V_{CNTLAB2}$ F8 1A

GSE LA1 (×4)

AUTO OFF ON

PNL R1A2 S12

V45 S2138E OF4 N/A — H_2 TK 1 HTR B SW-AUTO — 1=AUTO 1 S/S

V45 S2136E OF4 N/A — H_2 TK 1 HTR B SW-ON — 1=ON 1 S/S

CRYO H_2 TK 2 HEATERS A

V_{ESS1BC} FD 5.1K

$V_{CNTLBC1}$ F13 1A

$V_{CNTLBC2}$ F14 1A

GSE LA1 (×4)

AUTO OFF ON

PNL R1A2 S19

V45 S2233E OF4 N/A — H_2 TK 2 HTR A SW-AUTO — 1=AUTO 1 S/S

V45 S2231E OF4 N/A — H_2 TK 2 HTR A SW-ON — 1=ON 1 S/S

CRYO H_2 TK 2 HEATERS B

V_{ESS1BC} FD 5.1K

$V_{CNTLBC3}$ F15 1A

$V_{CNTLCA3}$ F16 1A

GSE LA1 (×4)

AUTO OFF ON

PNL R1A2 S20

V45 S2238E OF4 N/A — H_2 TK 2 HTR B SW-AUTO — 1=AUTO 1 S/S

V45 S2236E OF4 N/A — H_2 TK 2 HTR B SW-ON — 1=ON 1 S/S

V_{MNC} CRYO1 — V_{MNA} CRYO1 — V_{MNB} CRYO2 — V_{MNC} CRYO2

AUTO 1 — AUTO 2 — I 4 — $\overline{PAIR1}$ + CPC2 — CPC1 — I 3 — ENA1

AUTO 2 — AUTO 1 — I 4 — $\overline{PAIR2}$ + CPC1 — CPC2 — I 3 — ENA2

ON1A + ENA1 — RPC 4 (C) 5A (P) — F6 5A — F5 3A

ON1A + AUTO1A — RPC 3 (C) 5A (P)

ON1B + ENA1 — RPC 2 (C) 5A (P) — F2 5A — F1 3A

ON1B + AUTO1B — RPC 1 (C) 5A (P)

ON2A + ENA2 — RPC 4 (C) 5A (P) — F6 5A — F5 3A

ON2A + AUTO2A — RPC 3 (C) 5A (P)

ON2B + ENA2 — RPC 2 (C) 5A (P) — F2 5A — F1 3A

ON2B + AUTO2B — RPC 1 (C) 5A (P)

V45 X2106E OF1 N/A — H_2 TK 1 HEATER A ON — 1=ON 1 S/S

V45 X2108E OF1 N/A — H_2 TK 1 HEATER B ON — 1=ON 1 S/S

V45 X2206E OF3 N/A — H_2 TK 2 HEATER A ON — 1=ON 1 S/S

V45 X2208E OF3 N/A — H_2 TK 2 HEATER B ON — 1=ON 1 S/S

CPC1 (HEATER ON SIGNAL)

CPC2 (HEATER ON SIGNAL)

HTR ON: 20333 PSIA
HTR OFF: 22333 PSIA

ESS 2CA CRYO CNTLR — H_2 TK1 — 3A — PNL 0137D CB15 — V_{ESS2CA} 0136&R15

ESS 1BC CRYO CNTLR — H_2 TK2 — 3A — PNL 0137B CB8 — V_{ESS1BC} 0136&R15

HEATER CONTROLLER (CPC) H_2 TK 1

HEATER CONTROLLER (CPC) H_2 TK 2

(BFS) V45 P2110A OF2 N/A — H_2 TK 1 HTR CNTR PRESS — 145 TO 305 PSIA — 1 S/S C & V

(BFS) V45 P2210A OF3 N/A — H_2 TK 2 HTR CNTR PRESS — 145 TO 305 PSIA — 1 S/S C & V

CRW ELECTRONICS CH 50 — 60 70 80 — TK 3 TK 4 — YELLOW H_2 PRESS — PNL FTA2 HI=294 PSIA LOW=153 PSIA

V45 G2105A OF3 OF3 — H_2 TK 1 QUANTITY — 0 TO 105% — 1 S/S C

V45 G2205A OF1 OF1 — H_2 TK 2 QUANTITY — 0 TO 105% — 1 S/S C

V45 T2107A OF1 OM1 — H_2 TK 1 HTR ASSY TEMP — -425 TO +475° F — 1 S/S P

V45 T2101A OF3 OM2 — H_2 TK 1 FLUID TEMP — -425 TO +475° F — 1 S/S C

V45 T2207A OF2 OM2 — H_2 TK 2 HTR ASSY TEMP — -425 TO +475° F — 1 S/S P

V45 T2201A OF3 OM1 — H_2 TK 2 FLUID TEMP — -425 TO +475° F — 1 S/S C

V45 P2100A OF1 OF1 — H_2 TK 1 PRESSURE — 0 TO 400 PSIA — 1 S/S P

V45 P2200A OF3 OF3 — H_2 TK 2 PRESSURE — 0 TO 400 PSIA — 1 S/S P

V_{PRFLT1} MMC2b CRYO1&4 — GSE (QTY SELF TEST) — LF1 — I 9

V_{PRFLT2} MMC4b CRYO2&3 — GSE (QTY SELF TEST) — LF1 — I 9

V_{PRFLT1} MMC2b CRYO1&4 — III B — LF1 — GSE

V_{PRFLT2} MMC4b CRYO2&3 — III B — LF1 — GSE

ESS 2CA CRYO QTY — H_2 TK1 — 3A — PNL 0137D CB23 — V_{ESS2CA} 0136&R15

ESS 1BC CRYO QTY — H_2 TK2 — 3A — PNL 0137B CB21 — V_{ESS1BC} 0136&R15

H_2 FILL 1 — H_2 FILL 2 — FILL — VENT — SUPPLY

H_2 VENT TK 1 — H_2 VENT TK2

HTR B — HTR A — T — Q — 1 — 2

VAC ION PUMP — DSC — P

V45P2104A (GROUND ONLY) — V45P2204A (GROUND ONLY)

RELIEF VALVE/ FILTER PACKAGE

MANF RLF — CRACK 290 PSIG RESEAT 285 PSIG — 5% NOMINAL 12% ABSOLUTE — O/B RLF — CRACK 302 PSIG RESEAT 290 PSIG

MANF RLF — CRACK 290 PSIG RESEAT 285 PSIG — 5% NOMINAL 12% ABSOLUTE — O/B RLF — CRACK 302 PSIG RESEAT 290 PSIG

D/6 3,3-4 D/6 3,3-3 D/5 3,3-4 D/2 7 3,3-5

BASIC REV E-1

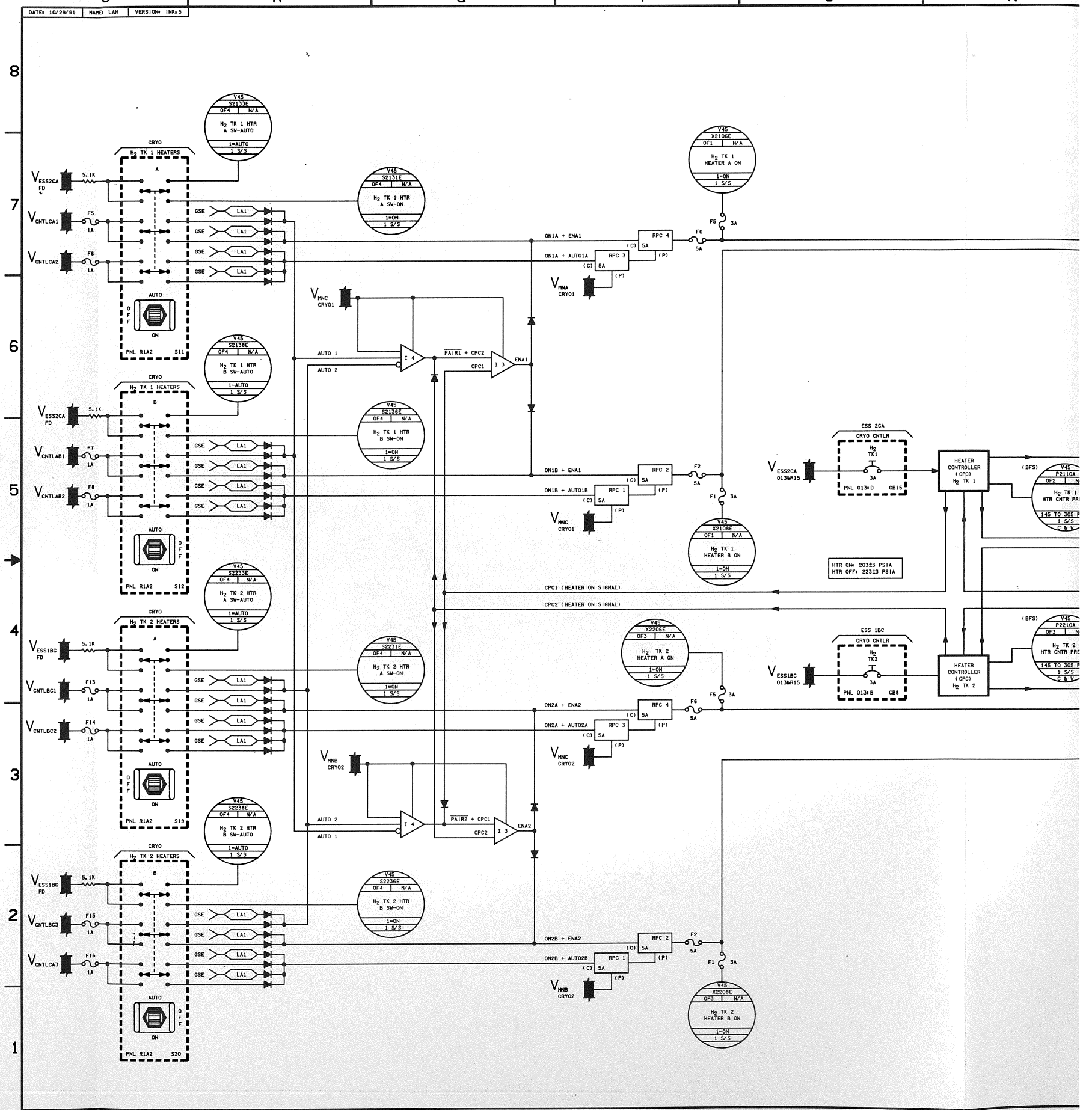
DATE: 10/28/91 NAME: LAM VERSION: INK5
S R Q P O N
8 7 6 5 4 3 2 1
CRYO H2 TK 1 HEATERS A
CRYO H2 TK 1 HEATERS B
CRYO H2 TK 2 HEATERS A
CRYO H2 TK 2 HEATERS B
V45 S2133E H2 TK 1 HTR A SW-AUTO
V45 S2138E H2 TK 1 HTR B SW-AUTO
V45 S2233E H2 TK 2 HTR A SW-AUTO
V45 S2238E H2 TK 2 HTR B SW-AUTO
V45 S2131E H2 TK 1 HTR A SW-ON
V45 S2136E H2 TK 1 HTR B SW-ON
V45 S2231E H2 TK 2 HTR A SW-ON
V45 S2236E H2 TK 2 HTR B SW-ON
V45 X2106E H2 TK 1 HEATER A ON
V45 X2108E H2 TK 1 HEATER B ON
V45 X2206E H2 TK 2 HEATER A ON
V46 X2208E H2 TK 2 HEATER B ON
V_ESS2CA FD
V_ESS1BC FD
V_CNTLCA1
V_CNTLCA2
V_CNTLAB1
V_CNTLAB2
V_CNTLBC1
V_CNTLBC2
V_CNTLBC3
V_CNTLCA3
5.1K
AUTO ON OFF
PNL R1A2 S11
PNL R1A2 S12
PNL R1A2 S19
PNL R1A2 S20
GSE LA1
AUTO 1
AUTO 2
I 4
I 3
PAIR1 + CPC2
CPC1
ENA1
PAIR2 + CPC1
CPC2
ENA2
V_MNC CRYO1
V_MNA CRYO1
V_MNB CRYO2
V_MNC CRYO2
ON1A + ENA1
ON1A + AUTO1A
ON1B + ENA1
ON1B + AUTO1B
ON2A + ENA2
ON2A + AUTO2A
ON2B + ENA2
ON2B + AUTO2B
RPC 4
RPC 3
RPC 2
RPC 1
(C) 5A
(P)
F1 3A
F2 5A
F5 3A
F6 5A
CPC1 (HEATER ON SIGNAL)
CPC2 (HEATER ON SIGNAL)
ESS 2CA CRYO CNTLR H2 TK1 3A PNL 013*D CB15
ESS 1BC CRYO CNTLR H2 TK2 3A PNL 013*B CB8
V_ESS2CA 013&R15
V_ESS1BC 013&R15
HEATER CONTROLLER (CPC) H2 TK 1
HEATER CONTROLLER (CPC) H2 TK 2
HTR ON= 20323 PSIA
HTR OFF= 22323 PSIA
(BFS)
V45 P2110A H2 TK 1 HTR CNTR PR
V45 P2210A H2 TK 2 HTR CNTR PR
145 TO 305 P
1 S/S
1=ON
BASIC REV E-1

DATE: 10/29/91	NAME: LAM	VERSION: INK 6
DATE: 11/6/91	NAME: VSH	VERSION: INK 7
DATE: 11/14/91	NAME: VSH	VERSION: INK 8

(11) OV-105 ONLY

(10) OV-102/5 ONLY

(9) ON VEH OV-103, OV-104, AND OV-105 TM PICK-OFF IS DOWNSTREAM OF THE 5 AMP FUSE

(8) RPC'S ARE 10 AMP ON OV-102

(7) SHADED PLUMBING INSTALLED ON OV-102/105 ONLY

(6) EXTENSION STUBS ARE ADDED AND CAPPED WHEN TANK NOT INSTALLED

(5) SWITCHES AND CIRCUIT BREAKER ARE SHOWN AS THEY APPEAR ON OV-103 AND OV-104. ON OV-102, SWITCHES AND CIRCUIT BREAKER ARE WIRED IDENTICALLY BUT PANEL DECALS APPEAR AS SHOWN BELOW

CRYO TANK 4/5 HEATERS — H_2 — TK 4/5 B — AUTO — ON — OFF — PNL A11 S5

CRYO TANK 4/5 HEATERS — H_2 — TK 4/5 A — AUTO — ON — OFF — PNL A11 S4

ESS 1BC — CRYO CNTLR — H_2 TK4/5 — 3A — PNL ML86B+G CB50

4. REFER TO TABLE 3-1 FOR DRAWING REFERENCES

3. TYPE I

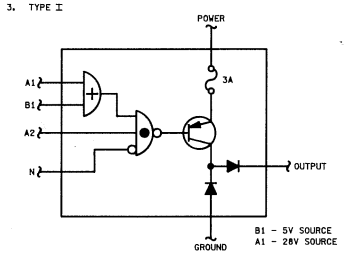

TYPE III

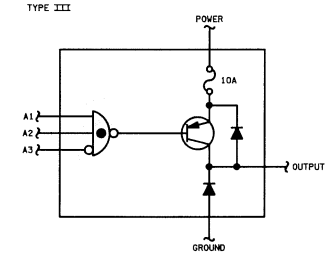

(2) LINE CONNECTIONS ARE CAPPED WHEN TANK IS REMOVED

NOTES: (1) ALL FILL PORTS AND FILL VENTS ARE LOCATED BEHIND THE PREFLIGHT UMBILICAL ACCESS DOOR. SEE DWG 3.3-1 FOR ACCESS DOOR LOCATION

*3 H_2 CRYO 2

SIGNATURE		DATE	NATIONAL AERONAUTICS AND SPACE ADMINISTRATION LYNDON B. JOHNSON SPACE CENTER HOUSTON, TEXAS
DSGN LAURIE M. BUCHANAN		2/11/83	
DR			
ENGR S. B. HIRSHORN			H_2 REACTANT STORAGE 4 TANK CONFIG
ENGR		11/13/91	
APP		11/15/91	
APP			SPACE SHUTTLE / DWG NO 3.3
OMNIPLAN S.K. Rodrigues		11-19-91	ALL
LTR E	PCN 1		82.5 X 34 / PAGE / SHEET 2 OF 7

BASIC REV E-1

DATE: 11/14/91 | NAME: VSH | VERSION: INK.8

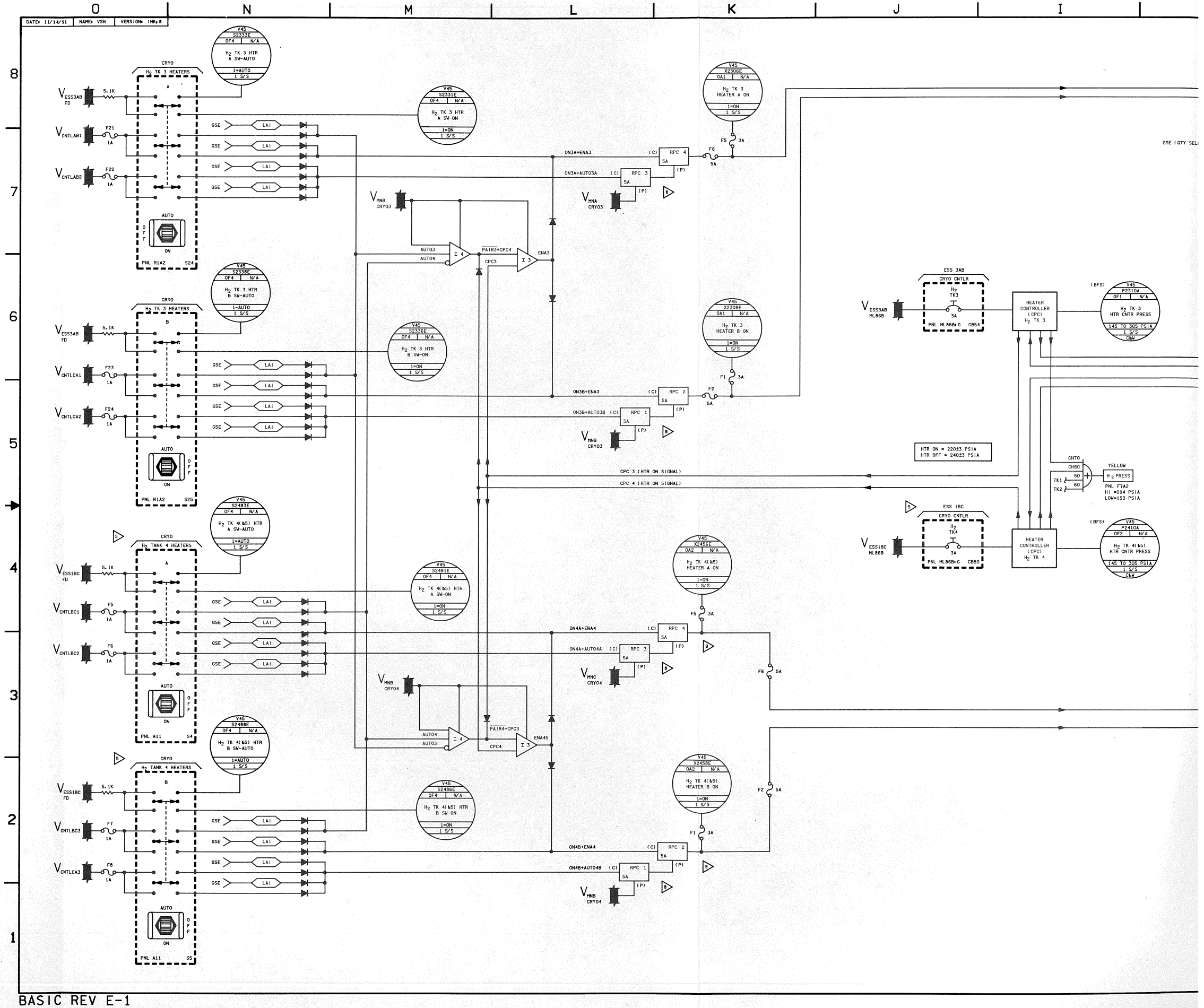

BASIC REV E-1

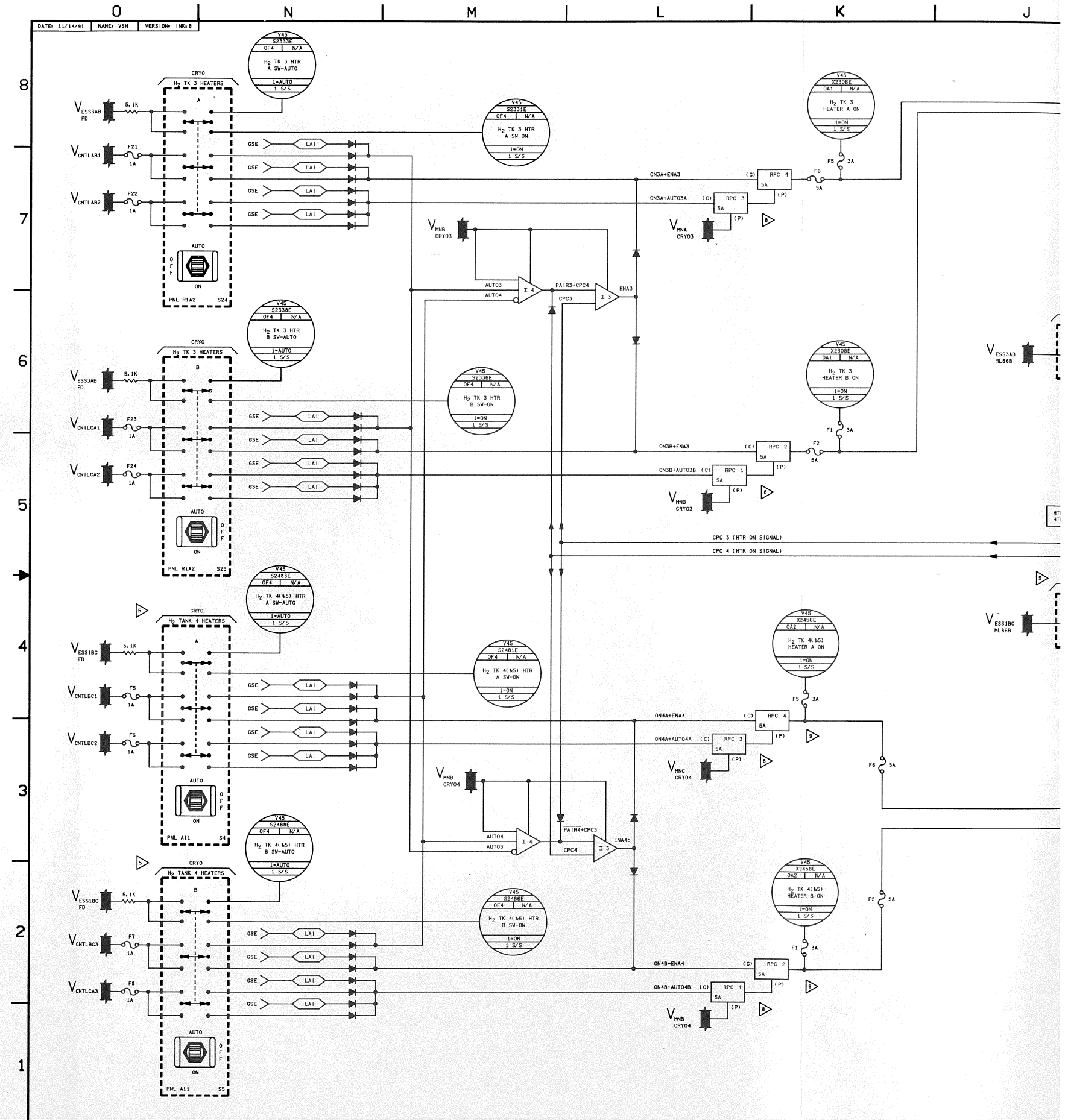
DATE: 11/14/91
NAME: VSH
VERSION: INK: 8
CRYO
H2 TK 3 HEATERS
H2 TANK 4 HEATERS
H2 TK 3 HTR A SW-AUTO
H2 TK 3 HTR A SW-ON
H2 TK 3 HTR B SW-AUTO
H2 TK 3 HTR B SW-ON
H2 TK 3 HEATER A ON
H2 TK 3 HEATER B ON
H2 TK 4(&5) HTR A SW-AUTO
H2 TK 4(&5) HTR A SW-ON
H2 TK 4(&5) HTR B SW-AUTO
H2 TK 4(&5) HTR B SW-ON
H2 TK 4(&5) HEATER A ON
H2 TK 4(&5) HEATER B ON
CPC 3 (HTR ON SIGNAL)
CPC 4 (HTR ON SIGNAL)
PNL R1A2
PNL A11

BASIC REV E-1

DATE: 10/29/91	NAME: LAM	VERSION: INK,5
DATE: 11/6/91	NAME: VSH	VERSION: INK,6
DATE: 11/14/91	NAME: VSH	VERSION: INK,7

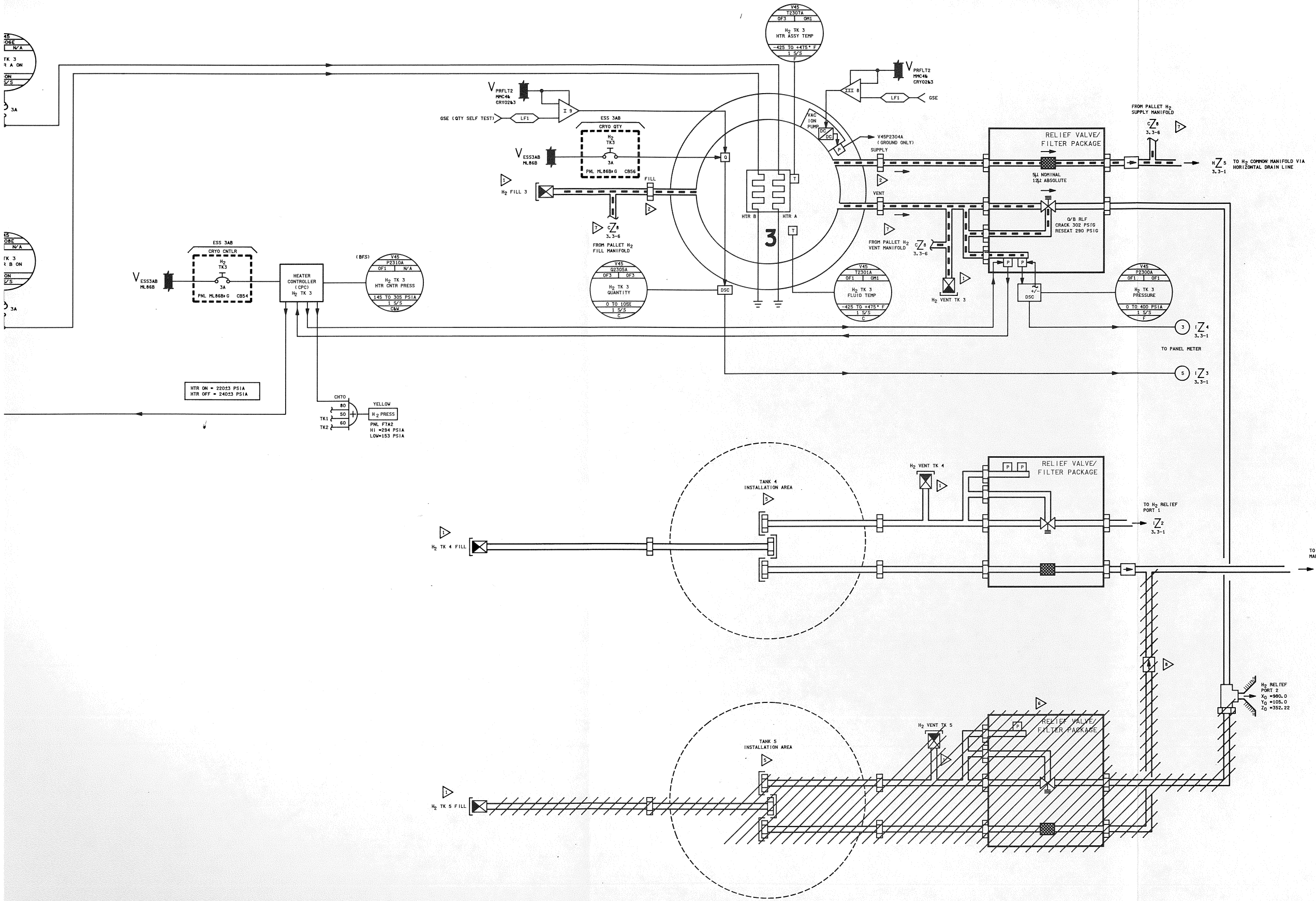

8. OV-105 ONLY
7. OV-102/5 ONLY
6. SHADED PLUMBING INSTALLED ON OV-102/105 ONLY
5. EXTENSION STUBS ARE ADDED AND CAPPED WHEN TANK NOT INSTALLED
4. REFER TO TABLE 3-1 FOR DRAWING REFERENCES
3. TYPE I

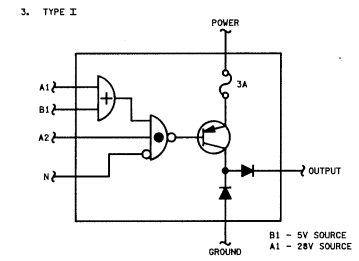

TYPE III

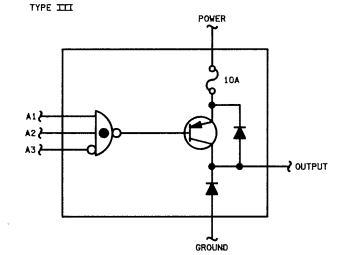

2. LINE CONNECTIONS ARE CAPPED WHEN TANK IS REMOVED

NOTES: 1. ALL FILL PORTS AND FILL VENTS ARE LOCATED BEHIND THE PREFLIGHT UMBILICAL ACCESS DOOR. SEE DWG 3.3-1 FOR ACCESS DOOR LOCATION

*3 H_2 CRYO 3

SIGNATURE	DATE	NATIONAL AERONAUTICS AND SPACE ADMINISTRATION LYNDON B. JOHNSON SPACE CENTER HOUSTON, TEXAS
DSGN LAURIE M. BUCHANAN	2/11/83	
DR		H_2 REACTANT STORAGE 3 TANK CONFIGURATION
ENGR S.R. HIRSHORN		
ENGR [signature]	11/15/91	
APP Paul D. Boyce	11/15/91	
APP [signature]		SPACE SHUTTLE
OMNIPLAN S.K. Kimbrow	11-19-91	ALL
LTR E	PCN 1	82.5 X 34

DWG NO 3.3

PAGE SHEET 3 OF 7

BASIC REV E-1

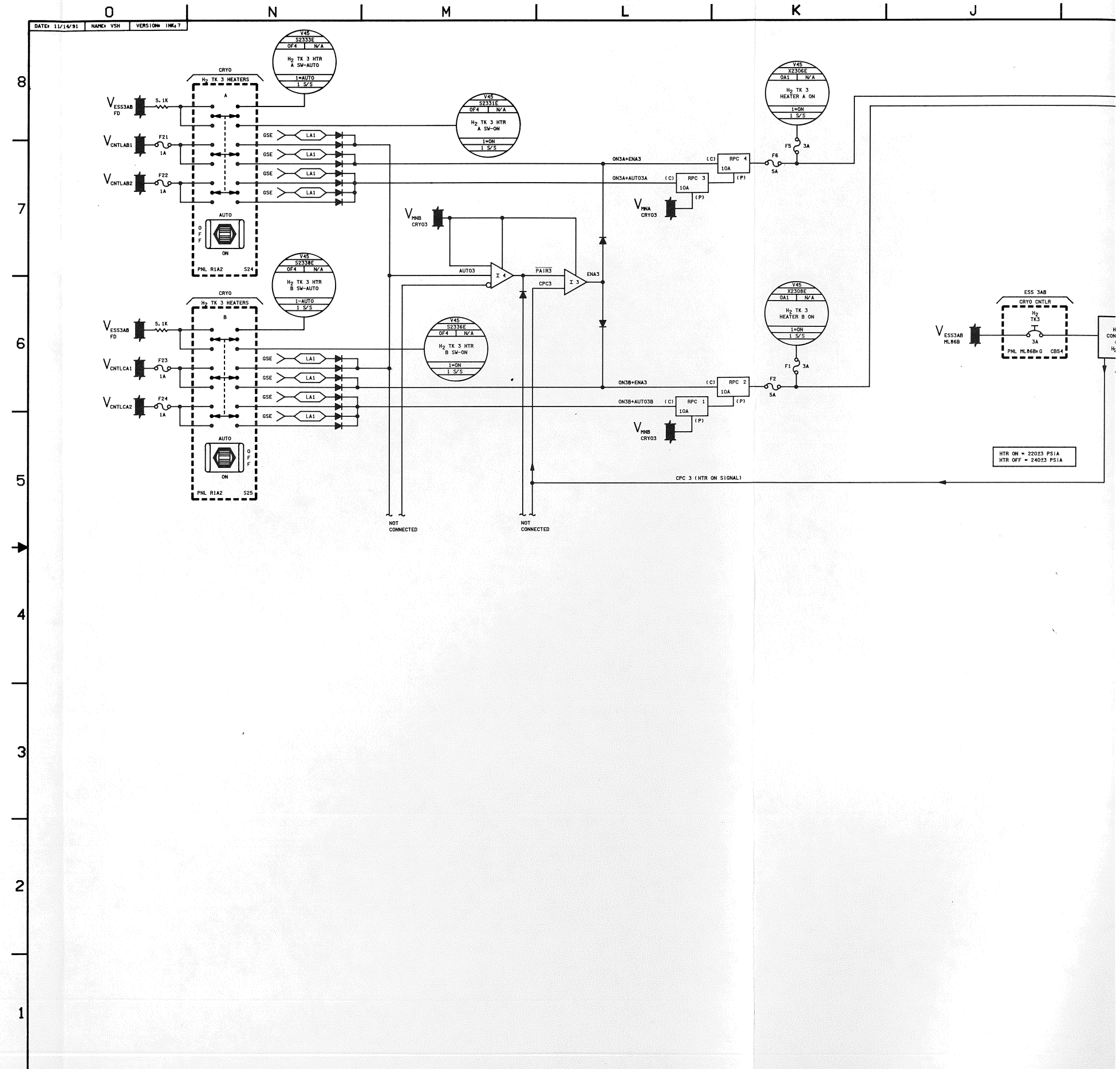

DATE: 11/14/91
NAME: VSH
VERSION: INK.7
CRYO
H2 TK 3 HEATERS
PNL R1A2
S24
S25
AUTO
ON
OFF
GSE
LA1
V45
S2333E
S2331E
S2338E
S2336E
H2 TK 3 HTR A SW-AUTO
H2 TK 3 HTR A SW-ON
H2 TK 3 HTR B SW-AUTO
H2 TK 3 HTR B SW-ON
V45
X2306E
X2308E
H2 TK 3 HEATER A ON
H2 TK 3 HEATER B ON
RPC 1
RPC 2
RPC 3
RPC 4
10A
ON3A+ENA3
ON3A+AUTO3A
ON3B+ENA3
ON3B+AUTO3B
AUTO3
PAIR3
CPC3
ENA3
NOT CONNECTED
CPC 3 (HTR ON SIGNAL)
ESS 3AB
CRYO CNTLR
PNL ML86B:G
CB54
HTR ON = 220±3 PSIA
HTR OFF = 240±3 PSIA

BASIC REV E-1

DATE: 10/18/90	NAME: MDU	VERSION: INK 1
DATE: 10/17/91	NAME: JMB	VERSION: BPT 15
DATE: 10/29/91	NAME: LAM	VERSION: INK 2

J I H G F E D C B A

8 7 6 5 4 3 2 1

ESS 3AB CRYO CNTLR — H_2 TK3 — 3A — PNL ML86B+G CB56 — V_{ESS3AB} ML86B

HEATER CONTROLLER (CPC) H_2 TK 3

(BFS) V45 P2310A — H_2 TK 3 HTR CNTR PRESS — 145 TO 305 PSIA — 1 S/S — C&W

HTR ON = 220±3 PSIA
HTR OFF = 240±3 PSIA

CHTO / CHBO — 50 / 60 — TK1 / TK2 — YELLOW — H_2 PRESS — PNL FTA2 HI =294 PSIA LOW=153 PSIA

ESS 1BC CRYO CNTLR — H_2 TK4/5 — 3A — PNL ML86B+G CB50 — V_{ESS1BC} ML86B

HEATER CONTROLLER (CPC) H_2 TK 4/5

(BFS) V45 P2410A — H_2 TK 4(&5) HTR CNTR PRESS — 145 TO 305 PSIA — 1 S/S — C&W

F14 5A F6 5A F2 5A F13 5A

V45 T2307A — H_2 TK 3 HTR ASSY TEMP — -425 TO +475° F — 1 S/S — F

V_{PRFLT2} MMC4& CRYO2&3 — GSE (QTY SELF TEST) — LF1 — I 9

ESS 3AB CRYO QTY — H_2 TK3 — 3A — PNL ML86B+G CB56 — V_{ESS3AB} ML86B

H_2 FILL 3 — FILL — $6Z_8$ 3.3-6 — FROM PALLET H_2 FILL MANIFOLD

V45 Q2305A — H_2 TK 3 QUANTITY — 0 TO 105% — 1 S/S — C

V45 T2301A — H_2 TK 3 FLUID TEMP — -425 TO +475° F — 1 S/S — C

HTR B HTR A — 3

VAC ION PUMP — DC/DC — V45P2304A (GROUND ONLY) — SUPPLY — VENT

RELIEF VALVE/ FILTER PACKAGE — 5Ll NOMINAL 12Ll ABSOLUTE — O/B RLF CRACK 302 PSIG RESEAT 290 PSIG

FROM PALLET H_2 SUPPLY MANIFOLD — $6Z_8$ 3.3-6 — H_2Z_5 3.3-1 TO H_2 COMMON MANIFOLD VIA HORIZONTAL DRAIN LINE

FROM PALLET H_2 VENT MANIFOLD — $6Z_8$ 3.3-6 — H_2 VENT TK 3

V45 P2300A — H_2 TK 3 PRESSURE — 0 TO 400 PSIA — 1 S/S — F — TO METER ON PANEL O2

3 4 5 6 — $1Z_4$ / $1Z_3$ 3.3-1

DSC +/-

V45 Q2405A — H_2 TK 4 QUANTITY — 0 TO 105% — 1 S/S — C

V45 T2401A — H_2 TK 4 FLUID TEMP — -425 TO +475° F — 1 S/S — C

H_2 VENT TK 4 — H_2 FILL 4 — ESS 1BC CRYO QTY — H_2 TK4 — 3A — PNL ML86B+G CB52 — V_{ESS1BC} ML86B

V_{PRFLT1} MMC2& CRYO1&4 — GSE (QTY SELF TEST) — LF1 — I 9 — $6Z_1$ 1

V45P2404A (GROUND ONLY) — $2Z_1$ — V_{PRFLT1} MMC2& CRYO1&4 — III B — LF1 — GSE

V45 T2407A — H_2 TK 4 HTR ASSY TEMP — -425 TO +475° F — 1 S/S — F

V45 P2400A — H_2 TK 4 PRESSURE — 0 TO 400 PSIA — 1 S/S — F

TO H_2 RELIEF PORT 1 — $2Z_2$ 3.3-1

TO H_2 COMMON MANIFOLD — H_2Z_5 3.3-1

V45 Q2505A — H_2 TK 5 QUANTITY — 0 TO 105% — 1 S/S — C

V45 T2501A — H_2 TK 5 FLUID TEMP — -425 TO +475° F — 1 S/S — C

H_2 VENT TK 5 — H_2 TK 5 FILL — ESS 2CA CRYO QTY — H_2 TK5 — 3A — PNL ML86B+G CB84 — V_{ESS2CA} ML86B

V45P2504A (GROUND ONLY) — $2Z_3$ — $6Z_3$ 1

V45 T2507A — H_2 TK 5 HTR ASSY TEMP — -425 TO +475° F — 1 S/S — F

V45 P2500A — H_2 TK 5 PRESSURE — 0 TO 400 PSIA — 1 S/S — F

H_2 RELIEF PORT 2 — X_O =390.0 Y_O =105.0 Z_O =352.22

4. REFER TO TABLE 3-1 FOR DRAWING REFERENCES
3. TYPE I

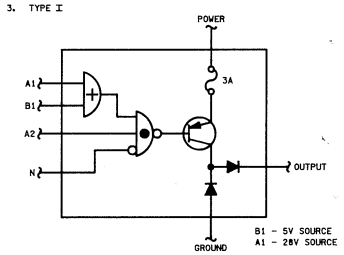

B1 - 5V SOURCE
A1 - 28V SOURCE

TYPE III

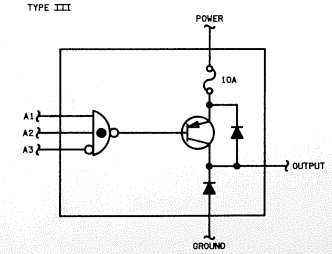

2 LINE CONNECTIONS ARE CAPPED WHEN TANK IS REMOVED

NOTES: 1 ALL FILL PORTS AND FILL VENTS ARE LOCATED BEHIND THE PREFLIGHT UMBILICAL ACCESS DOOR. SEE DWG 3.3-1 FOR ACCESS DOOR LOCATION

*3 H_2 CRYO 4

SIGNATURE	DATE	NATIONAL AERONAUTICS AND SPACE ADMINISTRATION LYNDON B. JOHNSON SPACE CENTER HOUSTON, TEXAS
DSGN LAURIE M. BUCHANAN	2/11/83	
DR		H_2 REACTANT STORAGE 5 TANK CONFIG OV-102 ONLY
ENGR S.R. HIRSHORN		
ENGR	11/5/91	
APP	11/5/91	
APP		SPACE SHUTTLE / DWG NO 3.3
OMNIPLAN S.R. Hirshorn	11-12-91	OV-102
LTR E PCN 1		82.5 X 34 / PAGE / SHEET 4 OF 7

BASIC REV E-1

DATE: 10/18/90	NAME: MDU	VERSION: INK$_3$ 1
DATE: 10/17/91	NAME: JMB	VERSION: BPT$_3$ 15
DATE: 10/29/91	NAME: LAM	VERSION: INK$_3$ 2

J I H G F E D C B A

8 7 6 5 4 3 2 1

ESS 3AB CRYO CNTLR — H_2 TK 3 — 3A — PNL ML86B4 G CB56 — V_{ESS3AB} ML86B

HEATER CONTROLLER (CPC) H_2 TK 3

(BFS) V45 P2310A — H_2 TK 3 HTR CNTR PRESS — 145 TO 305 PSIA — 1 S/S — C&W

HTR ON = 220±3 PSIA
HTR OFF = 240±3 PSIA

CH70 CH80 50 60 TK1 TK2 — YELLOW — H_2 PRESS — PNL FTA2 HI =294 PSIA LOW=153 PSIA

ESS 1BC CRYO CNTLR — H_2 TK 4/5 — 3A — PNL ML86B4 G CB50 — V_{ESS1BC} ML86B

HEATER CONTROLLER (CPC) H_2 TK 4/5

(BFS) V45 P2410A — H_2 TK 4(&5) HTR CNTR PRESS — 145 TO 305 PSIA — 1 S/S — C&W

F14 5A F6 5A F2 5A F13 5A

V_{PRFLT2} MMC4& CRYO2&3 — I 9 — LF1 — GSE (QTY SELF TEST)

ESS 3AB CRYO QTY — H_2 TK3 — 3A — PNL ML86B4 G CB56 — V_{ESS3AB} ML86B

H_2 FILL 3 — FILL — FROM PALLET H_2 FILL MANIFOLD — Z_8 3.3-6

V45 T2307A — H_2 TK 3 HTR ASSY TEMP — -425 TO +475° F — 1 S/S — F

V45 Q2305A — H_2 TK 3 QUANTITY — 0 TO 105% — 1 S/S — C

V45 T2301A — H_2 TK 3 FLUID TEMP — -425 TO +475° F — 1 S/S — C

HTR B HTR A — 3

VAC ION PUMP — DC DC — P — V45P2304A (GROUND ONLY)

SUPPLY — VENT — RELIEF VALVE/ FILTER PACKAGE — 5LI NOMINAL 12LI ABSOLUTE — O/B RLF CRACK 302 PSIG RESEAT 290 PSIG

FROM PALLET H_2 SUPPLY MANIFOLD — Z_8 3.3-6 — H_2 Z_5 3.3-1 TO H_2 COMMON MANIFOLD VIA HORIZONTAL DRAIN LINE

FROM PALLET H_2 VENT MANIFOLD — Z_8 3.3-6 — H_2 VENT TK 3

V45 P2300A — H_2 TK 3 PRESSURE — 0 TO 400 PSIA — 1 S/S — F — TO METER ON PANEL O2

3 I_{Z_4} 3.3-1; 4 I_{Z_4} 3.3-1; 5 I_{Z_3} 3.3-1; 6 I_{Z_3} 3.3-1

DSC +/- — V45 P2400A — H_2 TK 4 PRESSURE — 0 TO 400 PSIA — 1 S/S — F

V45 T2401A — H_2 TK 4 FLUID TEMP — -425 TO +475° F — 1 S/S — C

H_2 VENT TK 4 — RELIEF VALVE/ FILTER PACKAGE — O/B RLF CRACK 302 PSIG RESEAT 290 PSIG — 5LI NOMINAL 12LI ABSOLUTE — TO H_2 RELIEF PORT 1 — Z_2 3.3-1

V45 Q2405A — H_2 TK 4 QUANTITY — 0 TO 105% — 1 S/S — C

H_2 TK 4 FILL — FILL — ESS 1BC CRYO QTY — H_2 TK4 — 3A — PNL ML86B4 G CB52 — V_{ESS1BC} ML86B

HTR B HTR A — 4

VAC ION PUMP — DC DC — P — V45P2404A (GROUND ONLY)

V_{PRFLT1} MMC2& CRY01&4 — I 9 — LF1 — GSE (QTY SELF TEST) — Z_1 1

V_{PRFLT1} MMC2& CRY01&4 — LF1 — GSE — Z_1 2

V45 T2407A — H_2 TK 4 HTR ASSY TEMP — -425 TO +475° F — 1 S/S — F

V45 P2500A — H_2 TK 5 PRESSURE — 0 TO 400 PSIA — 1 S/S — F

V45 T2501A — H_2 TK 5 FLUID TEMP — -425 TO +475° F — 1 S/S — C

H_2 VENT TK 5 — RELIEF VALVE/ FILTER PACKAGE — O/B RLF CRACK 302 PSIG RESEAT 290 PSIG — 5LI NOMINAL 12LI ABSOLUTE

TO H_2 COMMON MANIFOLD — H_2 Z_5 3.3-1

H_2 RELIEF PORT 2 X_O =990.0 Y_O =105.0 Z_O =352.22

V45 Q2505A — H_2 TK 5 QUANTITY — 0 TO 105% — 1 S/S — C

H_2 TK 5 FILL — FILL — ESS 2CA CRYO QTY — H_2 TK5 — 3A — PNL ML86B4 G CB84 — V_{ESS2CA} ML86B

HTR B HTR A — 5

VAC ION PUMP — DC DC — P — V45P2504A (GROUND ONLY)

Z_3 1 — Z_3 2 — V45 T2507A — H_2 TK 5 HTR ASSY TEMP — -425 TO +475° F — 1 S/S — F

4. REFER TO TABLE 3-1 FOR DRAWING REFERENCES
3. TYPE I

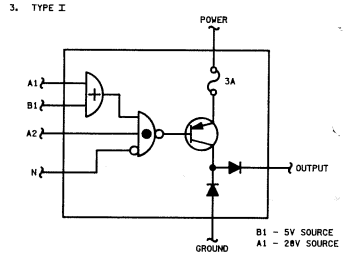

B1 - 5V SOURCE
A1 - 28V SOURCE

TYPE III

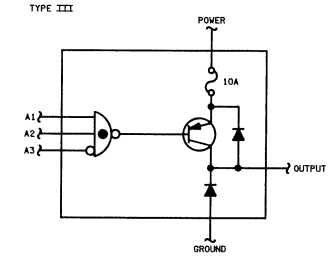

2 LINE CONNECTIONS ARE CAPPED WHEN TANK IS REMOVED

NOTES: 1 ALL FILL PORTS AND FILL VENTS ARE LOCATED BEHIND THE PREFLIGHT UMBILICAL ACCESS DOOR. SEE DWG 3.3-1 FOR ACCESS DOOR LOCATION

*3 H_2 CRYO 4

SIGNATURE		DATE	NATIONAL AERONAUTICS AND SPACE ADMINISTRATION LYNDON B. JOHNSON SPACE CENTER HOUSTON, TEXAS
DSO	LAURIE M. BUCHANAN	2/11/83	
DR			H_2 REACTANT STORAGE 5 TANK CONFIG OV-102 ONLY
ENGR	S.R. HIRSHORN	11/5/91	
ENGR			
APP			SPACE SHUTTLE
APP			OV-102
OMNIPLAN	S.K. LINDSEY	11-12-91	DWG NO 3.3
LTR	E	PCN 1	82.5 X 34

PAGE SHEET 4 OF 7

BASIC REV E-1

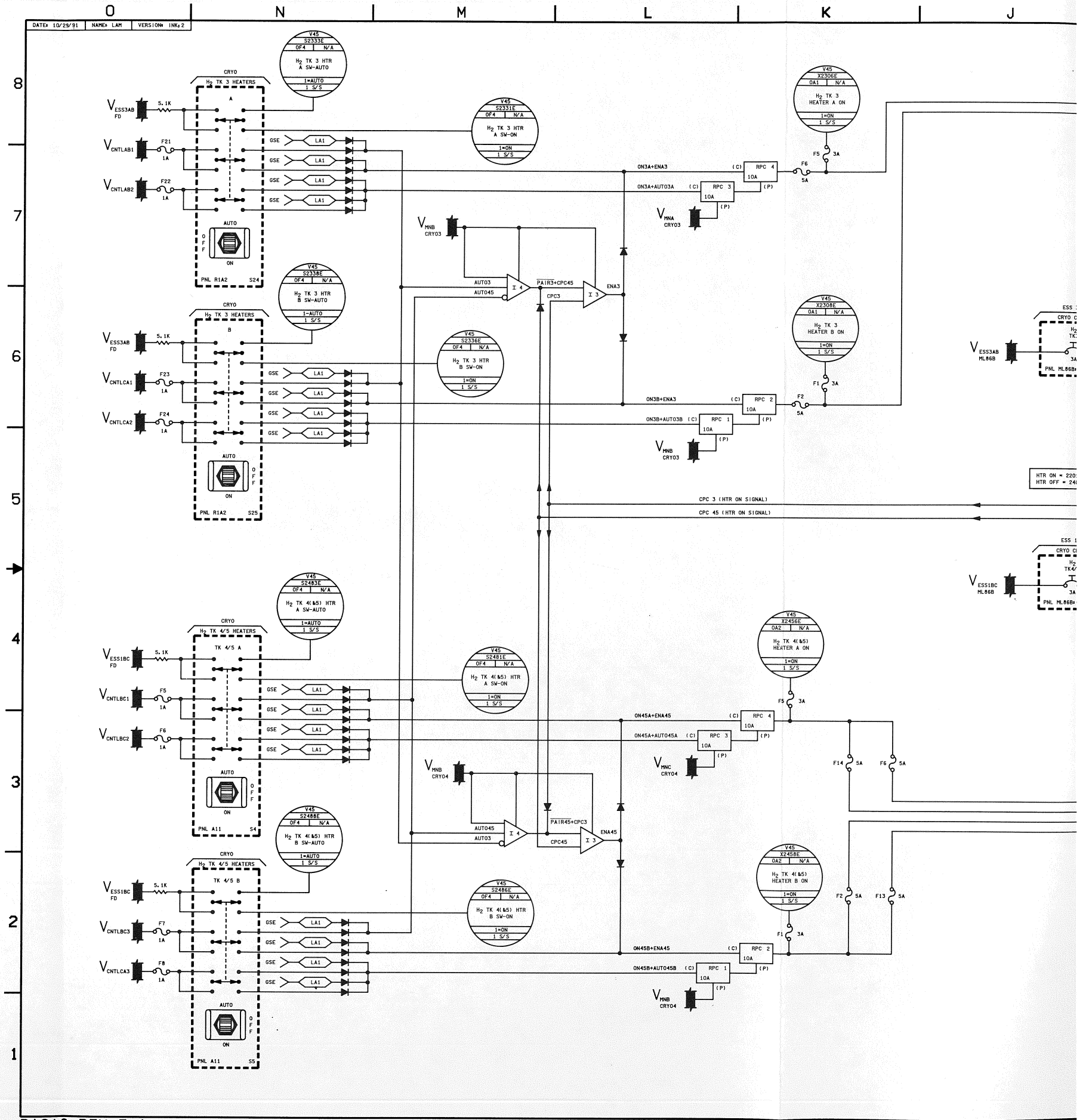
DATE: 10/29/91
NAME: LAM
VERSION: INK: 2
0
N
M
L
K
J
8
7
6
5
4
3
2
1
CRYO
H2 TK 3 HEATERS
A
B
TK 4/5 A
TK 4/5 B
V45 S2333E OF4 N/A H2 TK 3 HTR A SW-AUTO 1=AUTO 1 S/S
V45 S2331E OF4 N/A H2 TK 3 HTR A SW-ON 1=ON 1 S/S
V45 X2306E OA1 N/A H2 TK 3 HEATER A ON 1=ON 1 S/S
V45 S2338E OF4 N/A H2 TK 3 HTR B SW-AUTO 1=AUTO 1 S/S
V45 S2336E OF4 N/A H2 TK 3 HTR B SW-ON 1=ON 1 S/S
V45 X2308E OA1 N/A H2 TK 3 HEATER B ON 1=ON 1 S/S
V45 S2483E OF4 N/A H2 TK 4(&5) HTR A SW-AUTO 1=AUTO 1 S/S
V45 S2481E OF4 N/A H2 TK 4(&5) HTR A SW-ON 1=ON 1 S/S
V45 X2456E OA2 N/A H2 TK 4(&5) HEATER A ON 1=ON 1 S/S
V45 S2488E OF4 N/A H2 TK 4(&5) HTR B SW-AUTO 1=AUTO 1 S/S
V45 S2486E OF4 N/A H2 TK 4(&5) HTR B SW-ON 1=ON 1 S/S
V45 X2458E OA2 N/A H2 TK 4(&5) HEATER B ON 1=ON 1 S/S
V ESS3AB FD
V ESS1BC FD
V ESS3AB ML86B
V ESS1BC ML86B
5.1K
V CNTLAB1
V CNTLAB2
V CNTLCA1
V CNTLCA2
V CNTLBC1
V CNTLBC2
V CNTLBC3
V CNTLCA3
F21 1A
F22 1A
F23 1A
F24 1A
F5 1A
F6 1A
F7 1A
F8 1A
GSE
LA1
AUTO
OFF
ON
PNL R1A2 S24
PNL R1A2 S25
PNL A11 S4
PNL A11 S5
V MNB CRYO3
V MNA CRYO3
V MNB CRYO4
V MNC CRYO4
AUTO03
AUTO45
PAIR3+CPC45
PAIR45+CPC3
CPC3
CPC45
ENA3
ENA45
I 4
I 3
ON3A+ENA3
ON3A+AUTO3A
ON3B+ENA3
ON3B+AUTO3B
ON45A+ENA45
ON45A+AUTO45A
ON45B+ENA45
ON45B+AUTO45B
RPC 4
RPC 3
RPC 2
RPC 1
10A
(C)
(P)
F5 3A
F6 5A
F1 3A
F2 5A
F14 5A
F13 5A
CPC 3 (HTR ON SIGNAL)
CPC 45 (HTR ON SIGNAL)
HTR ON = 220
HTR OFF = 24

BASIC REV E-1

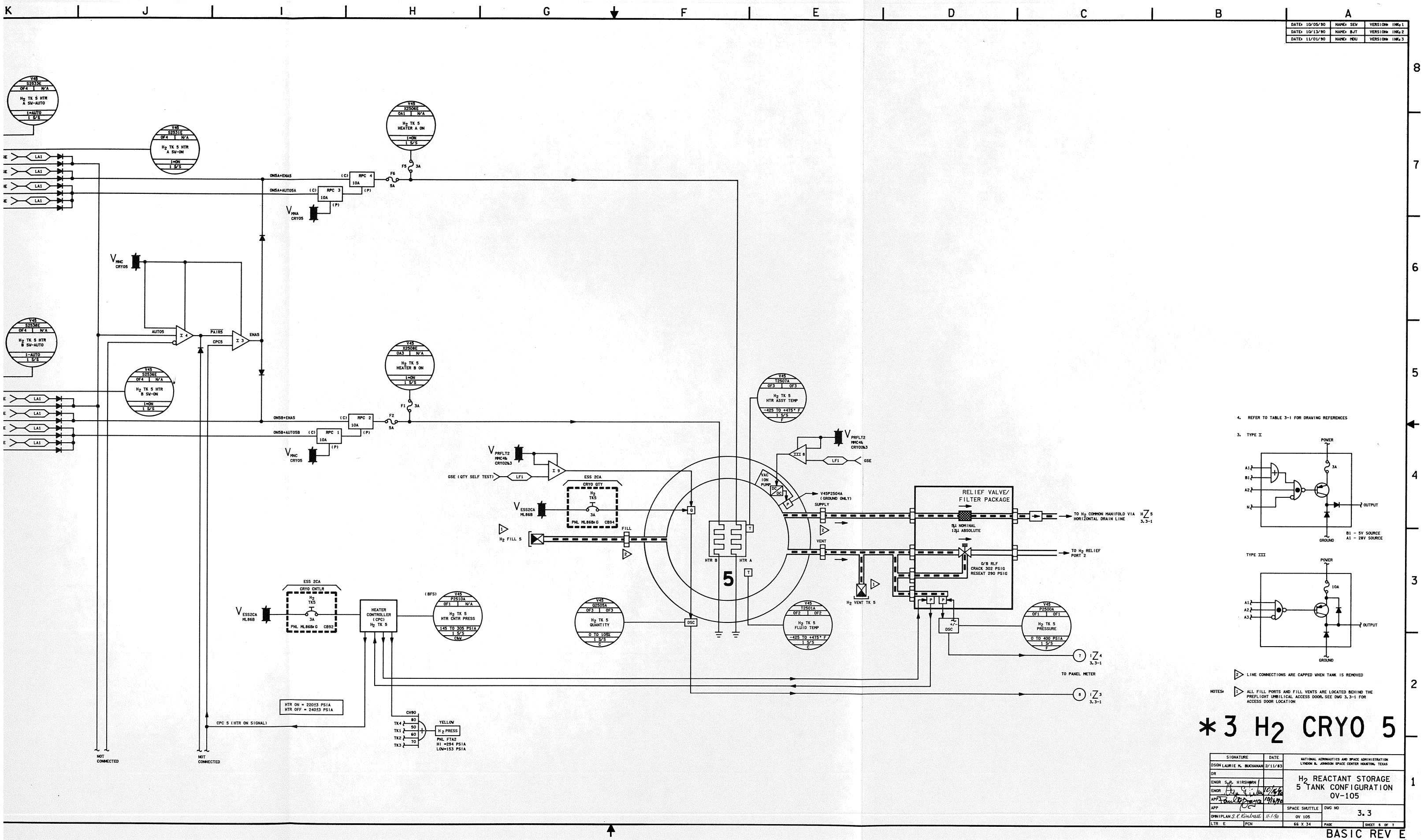

DATE: 10/05/90 NAME: SEV VERSION: INK 1
DATE: 10/13/90 NAME: BJT VERSION: INK 2
DATE: 11/01/90 NAME: MDU VERSION: INK 3
V45 S2533E OF4 N/A H2 TK 5 HTR A SW-AUTO 1=AUTO 1 S/S
V45 S2531E OF4 N/A H2 TK 5 HTR A SW-ON 1=ON 1 S/S
V45 X2506E OA1 N/A H2 TK 5 HEATER A ON 1=ON 1 S/S
V45 S2538E OF4 N/A H2 TK 5 HTR B SW-AUTO 1=AUTO 1 S/S
V45 S2536E OF4 N/A H2 TK 5 HTR B SW-ON 1=ON 1 S/S
V45 X2508E OA3 N/A H2 TK 5 HEATER B ON 1=ON 1 S/S
V45 T2507A OF3 OF3 H2 TK 5 HTR ASSY TEMP -425 TO +475° F 1 S/S F
V45 P2510A OF1 N/A H2 TK 5 HTR CNTR PRESS 145 TO 305 PSIA 1 S/S C&W
V45 Q2505A OF3 OF3 H2 TK 5 QUANTITY 0 TO 105% 1 S/S C
V45 T2501A OF2 OF2 H2 TK 5 FLUID TEMP -425 TO +475° F 1 S/S C
V45 P2500A OF1 OF1 H2 TK 5 PRESSURE 0 TO 400 PSIA 1 S/S F
ON5A+ENA5
ON5A+AUTO5A
ON5B+ENA5
ON5B+AUTO5B
RPC 1 10A
RPC 2 10A
RPC 3 10A
RPC 4 10A
F1 3A
F2 5A
F5 3A
F6 5A
AUTO5
PAIR5
CPC5
ENA5
GSE (QTY SELF TEST)
LF1
GSE
ESS 2CA CRYO QTY H2 TK5 3A PNL ML86B&G CB94
ESS 2CA CRYO CNTLR H2 TK5 3A PNL ML86B&G CB92
ESS2CA ML86B
H2 FILL 5
FILL
VAC ION PUMP
V45P2504A (GROUND ONLY)
SUPPLY
VENT
HTR B
HTR A
5
RELIEF VALVE/ FILTER PACKAGE
5μ NOMINAL 12μ ABSOLUTE
O/B RLF CRACK 302 PSIG RESEAT 290 PSIG
TO H2 COMMON MANIFOLD VIA HORIZONTAL DRAIN LINE
TO H2 RELIEF PORT 2
H2 VENT TK 5
HEATER CONTROLLER (CPC) H2 TK 5
(BFS)
HTR ON = 220±3 PSIA
HTR OFF = 240±3 PSIA
CPC 5 (HTR ON SIGNAL)
CH90
YELLOW
H2 PRESS
PNL FTA2 HI =294 PSIA LOW=153 PSIA
TO PANEL METER
NOT CONNECTED
NOT CONNECTED
4. REFER TO TABLE 3-1 FOR DRAWING REFERENCES
3. TYPE I
POWER
OUTPUT
GROUND
B1 - 5V SOURCE
A1 - 28V SOURCE
TYPE III
LINE CONNECTIONS ARE CAPPED WHEN TANK IS REMOVED
NOTES: 1 ALL FILL PORTS AND FILL VENTS ARE LOCATED BEHIND THE PREFLIGHT UMBILICAL ACCESS DOOR. SEE DWG 3.3-1 FOR ACCESS DOOR LOCATION
*3 H2 CRYO 5
SIGNATURE DATE
DSGN LAURIE M. BUCHANAN 2/11/83
DR
ENGR S.R. HIRSHORN
ENGR 10/16/90
APP 10/16/90
APP
OMNIPLAN S.K. Kimbrell 11-1-90
LTR E PCN
NATIONAL AERONAUTICS AND SPACE ADMINISTRATION LYNDON B. JOHNSON SPACE CENTER HOUSTON, TEXAS
H2 REACTANT STORAGE 5 TANK CONFIGURATION OV-105
SPACE SHUTTLE OV 105
66 X 34
DWG NO 3.3
PAGE SHEET 5 OF 7
BASIC REV E

BASIC REV E

1 2 3 4 5 6 7 8

L K J I H G F E D

5

RELIEF VALVE
FILTER PACKAGE

91 NOMINAL
121 ABSOLUTE

VENT

SUPPLY

V49250A
(GROUND CMD)

VAC PUMP

DC

P

T

HTR A

HTR B

OSC

H_2 VENT TX 5

H_2 FILL 5

FILL

H_2 TX 5
FLUID TEMP
-425 TO +475° F
1 S/S
OF2 | OF2
V45 T2501A
C

H_2 TX 5
HTR ASSY TEMP
-425 TO +475° F
1 S/S
OF3 | OF3
V45 T2501A
F

H_2 TX 5
QUANTITY
0 TO 105%
1 S/S
OF3 | OF3
V45 Q2505A
C

H_2 TX 5
HTR CNTR PRESS
145 TO 305 PSIA
1 S/S
OF1 | N/A
V45 P2510A
C&V

(BFS)

HEATER CONTROLLER (CPC)
H_2 TX 5

CPC 5 (HTR ON SIGNAL)

HTR ON = 2203.5 PSIA
HTR OFF = 2403.5 PSIA

CONNECTED
NOT CONNECTED

CH90
TX4 60
TX1 50
TX2 60
TX3 10

H_2 PRESS
PWL F7A2
HI -294 PSIA
LOW-153 PSIA
YELLOW

ESS 2CA
CRYO CNTLR
H_2 TK5
3A
PWL M,B6B+D C892
ESS2CA M,B6B

ESS 2CA
CRYO QTY
H_2 TK5
3A
PWL M,B6B+D C894
ESS2CA M,B6B

CRYO QTY SELF TEST)
LF1
I 9
PPCL72 MMC46 CRYO2&3

LF1
GSE
III B
PPCL72 MMC46 CRYO2&3

ONS4+AUTOSA (C) RPC 3 10A (P) 5A F6
ONS4+EMAS (C) RPC 4 10A (P) 3A F5
H_2 TK 5 HEATER A ON
1 S/S
1=ON
V49 X2506E
OA1 | N/A
V49 X2506E
F

ONS8+AUTOSB (C) RPC 1 10A (P) 5A F2
ONS8+EMAS (C) RPC 2 10A (P) 3A F1
H_2 TK 5 HEATER B ON
1 S/S
1=ON
V49 X2506E
OA3 | N/A
V49 X2506E
F

MMC CRYOS

PWA CRYOS

MMC CRYOS

AUTOS
I 4
EMAS
I 3
PA1RS CRCS

H_2 TK 5 HEATERS
CRYO
PWL A15 S8
ON
AUTO
1 2 3 4

H_2 TK 5 HTR
A SW-ON
1 S/S
1=ON
V49 X2531E
OF4 | N/A
V49 X2531E
A

H_2 TK 5 HTR
B SW-ON
1 S/S
1=ON
V49 X2536E
OF4 | N/A
V49 X2536E
B

H_2 TK 5 HEATERS
CRYO
PWL A15 S1
ON
AUTO
1 2 3 4

H_2 TK 5 HTR
A SW-AUTO
1 S/S
1=AUTO
V49 X2531E
OF4 | N/A
V49 X2531E
A

H_2 TK 5 HTR
B SW-AUTO
1 S/S
1=AUTO
V49 X2536E
OF4 | N/A
V49 X2536E
B

GSE LA1

CNTLBC3 F8 1A ESS2CA F9 5.1K
CNTLBC1 F7 1A ESS2CA F9 5.1K
CNTLCA2 F6 1A
CNTLCA1 F5 1A ESS2CA F9 5.1K

A		
DATE: 10/06/90	NAME: CAR	VERSION: INC: 1
DATE: 11/5/91	NAME: PSD	VERSION: INC: 2
DATE: 11/13/91	NAME: PSD	VERSION: INC: 3

V45 X4106E | 0A3 | N/A | H_2 TK 6 HEATER A ON | 1=ON | 1 S/S

F5 3A

F6 3A

V45 X4108E | 0A1 | N/A | H_2 TK 6 HEATER B ON | 1=ON | 1 S/S

F1 3A

F2 A

PALLET CRYO ESS 1BC TANK 6 CNTLR H_2 3A PNL A15 CB4

V_{ESS1BC} FD

HEATER CONTROLLER (CPC) H_2 TK 6

(BFS) V45 P4110A | 0A1 | N/A | H_2 TK 6 HTR CNTR PRESS | 145 TO 305 PSIA | 1 S/S | C&W

V45 Q4105A | 0F2 | PDSC1 | H_2 TK 6 QUANTITY | 0 TO 105% | 1 S/S | C

V45 T4107A | 0F2 | PDSC1 | H_2 TK 6 HTR ASSY TEMP | -425 TO +475° F | 1 S/S | C

V_{PRFLT1} CRY06

GSE (QTY SELF TEST) LMI

I 9

PALLET CRYO ESS 1BC TANK 6 QTY H_2 3A PNL A15 CB6

V_{ESS1BC} FD

HTR B HTR A 6

VAC ION PUMP DC DC P

V45P4104G (GROUND ONLY)

SUPPLY FILL VENT

V_{PRFLT1} CRY06

III 8 LMI GSE

V45 T4101A | 0F4 | PDSC2 | H_2 TK 6 FLUID TEMP | -425 TO +475° F | 1 S/S | C

H_2 TANK 6 FILL/SUPPLY PANEL

5μ NOMINAL 12μ ABSOLUTE

LMI GSE

H_2 TANK 6 VENT VLV PANEL

LMI GSE

H_2 TANK 6 RELIEF VALVE PANEL

P P

O/B RLF CRACK 302 PSIG RESEAT 290 PSIG

PDSC1 +/-

(BFS) V45 P4100A | 0F2 | PDSC1 | H_2 TK 6 PRESSURE | 0 TO 400 PSIA | 1 S/S | F

TO OVERBOARD RELIEF LINE

TO H_2 TANK 3 VENT LINE

TO H_2 TANK 3 FILL LINE

TO H_2 TANK 3 SUPPLY LINE

ORBITER PALLET

PALLET H_2 RELIEF MANIFOLD

PALLET H_2 VENT MANIFOLD

PALLET H_2 FILL MANIFOLD

PALLET H_2 SUPPLY MANIFOLD

HTR ON = 220±3 PSIA
HTR OFF = 240±3 PSIA

V45 X4206E | 0A1 | N/A | H_2 TK 7 HEATER A ON | 1=ON | 1 S/S

F5 3A

F6 5A

PALLET CRYO ESS 1BC TANK 7 CNTLR H_2 3A PNL A15 CB10

V_{ESS1BC} FD

HEATER CONTROLLER (CPC) H_2 TK 7

(BFS) V45 P4210A | 0A3 | N/A | H_2 TK 7 HTR CNTR PRESS | 145 TO 305 PSIA | 1 S/S | C&W

V45 Q4205A | 0F4 | PDSC2 | H_2 TK 7 QUANTITY | 0 TO 105% | 1 S/S | C

V45 T4201A | 0F2 | PDSC1 | H_2 TK 7 FLUID TEMP | -425 TO +475° F | 1 S/S | C

HTR B HTR A 7

VENT SUPPLY FILL

PALLET CRYO ESS 1BC TANK 7 QTY H_2 3A PNL A15 CB12

V_{ESS1BC} FD

VAC ION PUMP DC DC P

V45P4204G (GROUND ONLY)

V_{PRFLT2} CRY07

III 8 LMI GSE

V_{PRFLT2} CRY07

GSE (QTY SELF TEST) LMI

I 9

V45 T4207A | 0F4 | PDSC2 | H_2 TK 7 HTR ASSY TEMP | -425 TO +475° F | 1 S/S | F

PDSC2 +/-

(BFS) V45 P4200A | 0F4 | PDSC2 | H_2 TK 7 PRESSURE | 0 TO 400 PSIA | 1 S/S | F

H_2 TANK 7 RELIEF

O/B RLF CRACK 302 PSIG RESEAT 290 PSIG

H_2 TANK 7 VENT VLV PANEL

LMI GSE

H_2 TANK 7 FILL/SUPPLY PANEL

5μ NOMINAL 12μ ABSOLUTE

LMI GSE

TO H_2 TANKS 8, 9 RELIEF LINES <Z8 3.3-7

TO H_2 TANKS 8, 9 VENT LINES <Z8 3.3-7

TO H_2 TANKS 8, 9 FILL LINES <Z8 3.3-7

TO H_2 TANKS 8, 9 SUPPLY LINES <Z8 3.3-7

3 <Z7 3.3-2, 3, 4

4 <Z7 3.3-2, 3, 4

5 <Z6 3.3-2, 3, 4

2 FOR OV-102 AND OV-105 FLIGHTS WITHOUT AN EDO PALLET, THESE LINES WILL BE CAPPED

NOTES: 1. REFER TO TABLE 3-I FOR DRAWING REFERENCES

*3 H_2 CRYO 6

SIGNATURE	DATE	NATIONAL AERONAUTICS AND SPACE ADMINISTRATION LYNDON B. JOHNSON SPACE CENTER HOUSTON, TEXAS
DSON VICKI S. HUNTER	8/16/90	
DR		PALLET H_2 REACTANT TANKS 6 & 7
ENGR L.V. MINTER	11/8/91	
ENGR		
APP		SPACE SHUTTLE
APP		DWG NO 3.3
OMNIPLAN J.K. Kinlaw	11.12.91	EDO: OV102 AND OV105
LTR E PCN 1		82.5 X 34 PAGE SHEET 6 OF 7

BASIC REV E-1

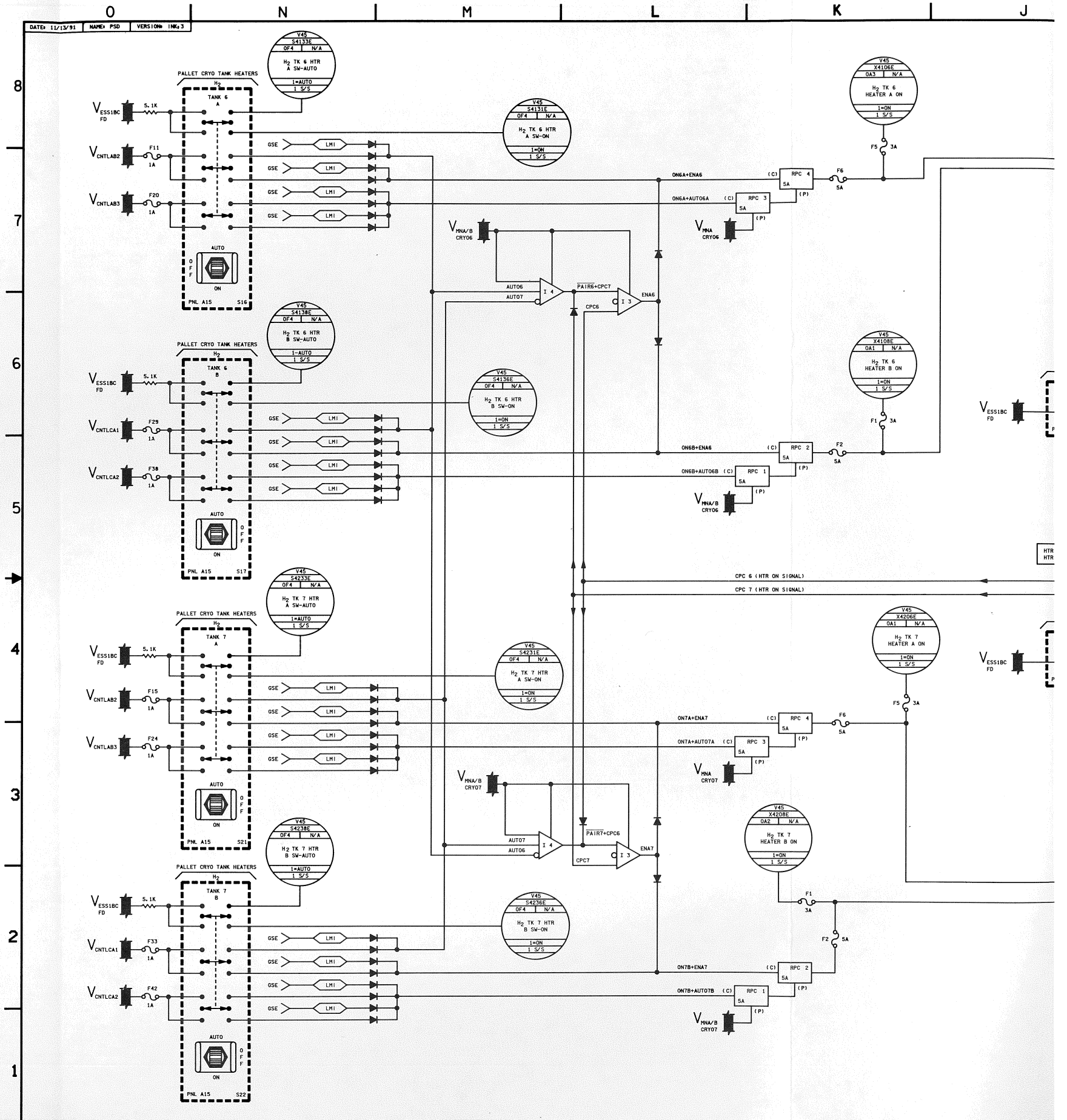
DATE: 11/13/91
NAME: PSD
VERSION: INK 3
PALLET CRYO TANK HEATERS
TANK 6 A
TANK 6 B
TANK 7 A
TANK 7 B
AUTO
ON
OFF
PNL A15 S16
PNL A15 S17
PNL A15 S21
PNL A15 S22
V45 S4133E H2 TK 6 HTR A SW-AUTO
V45 S4131E H2 TK 6 HTR A SW-ON
V45 S4138E H2 TK 6 HTR B SW-AUTO
V45 S4136E H2 TK 6 HTR B SW-ON
V45 S4233E H2 TK 7 HTR A SW-AUTO
V45 S4231E H2 TK 7 HTR A SW-ON
V45 S4238E H2 TK 7 HTR B SW-AUTO
V45 S4236E H2 TK 7 HTR B SW-ON
V45 X410BE H2 TK 6 HEATER A ON
V45 X410AE H2 TK 6 HEATER B ON
V45 X420BE H2 TK 7 HEATER A ON
V45 X420AE H2 TK 7 HEATER B ON
1=AUTO 1 S/S
1=ON 1 S/S
OF4 N/A
OA3 N/A
OA1 N/A
OA2 N/A
VESS1BC FD
VCNTLAB2
VCNTLAB3
VCNTLCA1
VCNTLCA2
VMNA/B CRY06
VMNA/B CRY07
VMNA CRY06
VMNA CRY07
5.1K
F11 1A
F20 1A
F29 1A
F38 1A
F15 1A
F24 1A
F33 1A
F42 1A
GSE
LMI
ON6A+ENA6
ON6A+AUTO6A
ON6B+ENA6
ON6B+AUTO6B
ON7A+ENA7
ON7A+AUTO7A
ON7B+ENA7
ON7B+AUTO7B
RPC 4 5A
RPC 3 5A
RPC 2 5A
RPC 1 5A
F6 5A
F5 3A
F2 5A
F1 3A
AUTO6
AUTO7
PA1R6+CPC7
CPC6
ENA6
PA1R7+CPC6
CPC7
ENA7
I 4
I 3
CPC 6 (HTR ON SIGNAL)
CPC 7 (HTR ON SIGNAL)
HTR
HTR

BASIC REV E-1

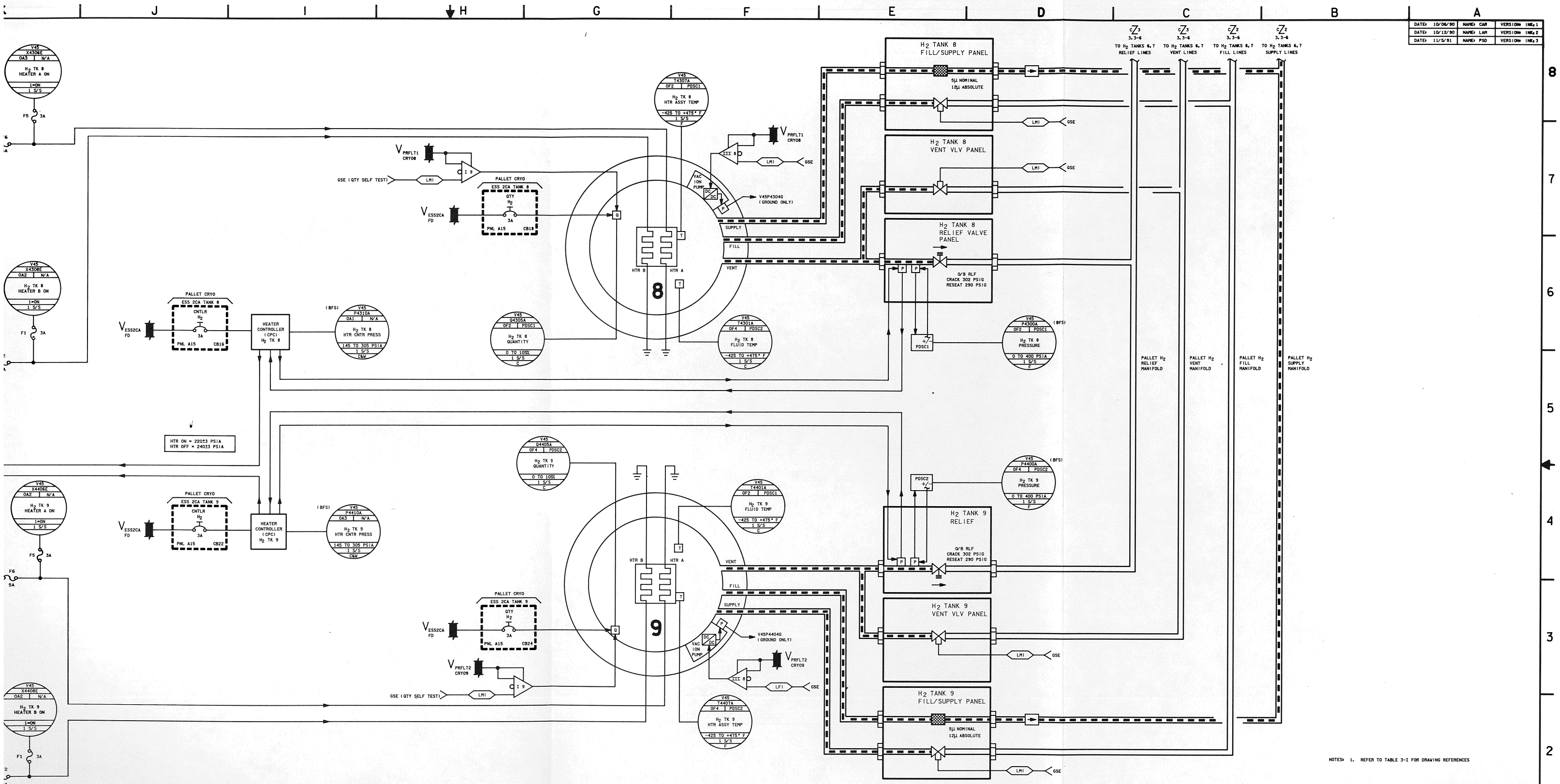

NOTES: 1. REFER TO TABLE 3-I FOR DRAWING REFERENCES

*3 H_2 CRYO 7

SIGNATURE	DATE	NATIONAL AERONAUTICS AND SPACE ADMINISTRATION LYNDON B. JOHNSON SPACE CENTER HOUSTON, TEXAS
DSGN VICKI S. HUNTER	8/15/90	
DR		PALLET H_2 REACTANT TANKS 8 & 9
ENGR R. AL-AYOUBI		
ENGR Fami Al-Ayoubi	11/8/91	
APP Larry Hunter	11/8/91	
APP Paul Mayer	11/8/91	SPACE SHUTTLE — DWG NO 3.3
OMNIPLAN S. Kimball	11-12-91	EDO: OV102 AND OV105
LTR E — PCN 1		82.5 X 34 — PAGE — SHEET 7 OF 7

BASIC REV E-1

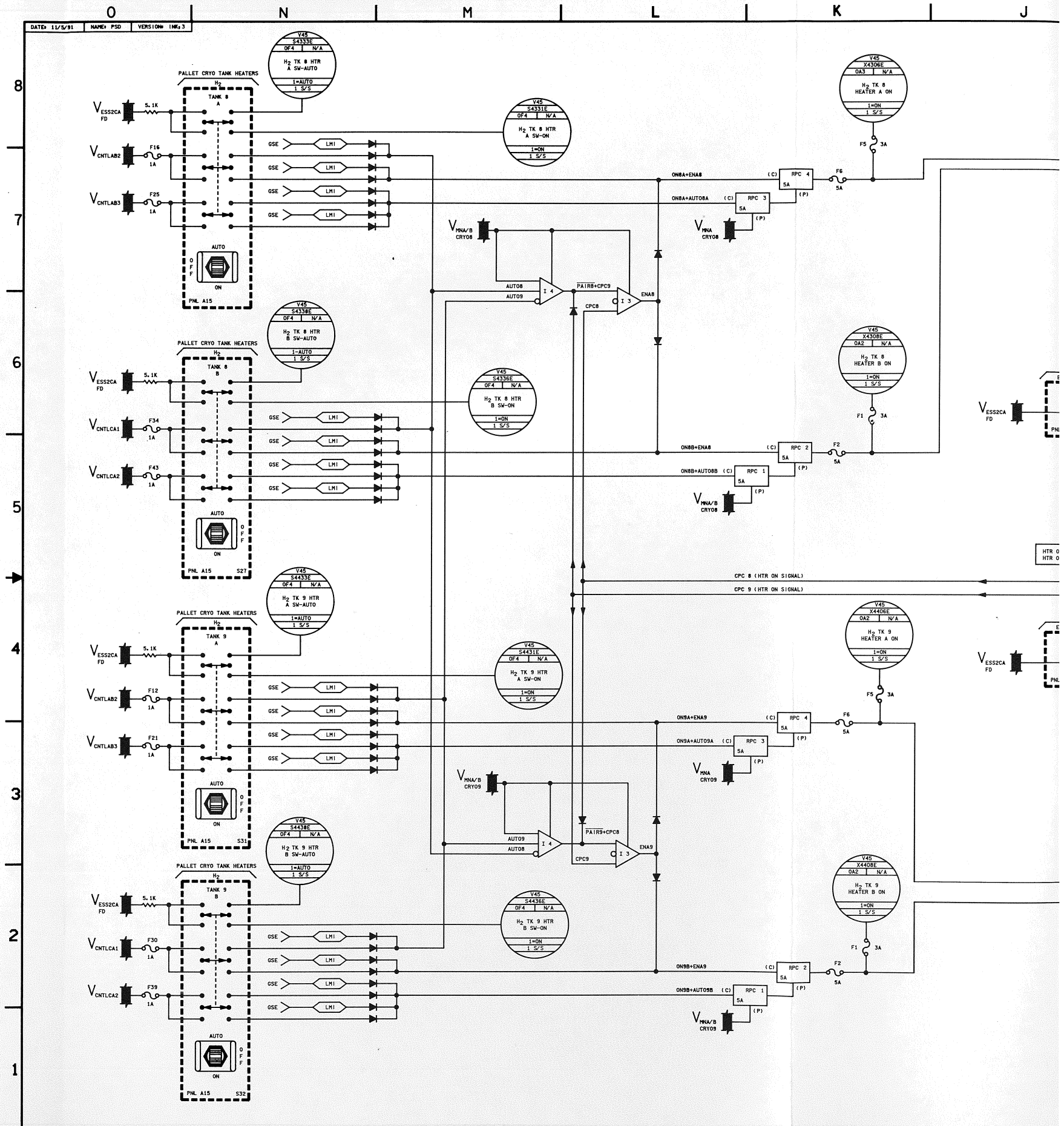

DATE: 11/5/91
NAME: PSD
VERSION: INK: 3
PALLET CRYO TANK HEATERS
TANK 8 A
TANK 8 B
TANK 9 A
TANK 9 B
H2 TK 8 HTR A SW-AUTO
H2 TK 8 HTR A SW-ON
H2 TK 8 HTR B SW-AUTO
H2 TK 8 HTR B SW-ON
H2 TK 9 HTR A SW-AUTO
H2 TK 9 HTR A SW-ON
H2 TK 9 HTR B SW-AUTO
H2 TK 9 HTR B SW-ON
H2 TK 8 HEATER A ON
H2 TK 8 HEATER B ON
H2 TK 9 HEATER A ON
H2 TK 9 HEATER B ON
CPC 8 (HTR ON SIGNAL)
CPC 9 (HTR ON SIGNAL)

BASIC REV E-1

DATE: 12/17/92	NAME: LAM	VERSION: INK12
DATE: 02/26/96	NAME: SVJ	VERSION: BPT6
DATE: 04/16/96	NAME: SVJ	VERSION: INK13

J I H G F E D C B A

8 7 6 5 4 3 2 1

FUEL CELL PURGE VALVES 1 (2, 3) OPEN CLOSE PNL R11U S3 (S4) (S5)

$V_{CNTLAB1}$ (BC1) (CA1) 1.2K

$V_{CNTLAB2}$ (BC2) (CA2) 1.2K

V_{ESS1BC} FD (2CA) (3AB) 5.1K

V_{ESS3AB} FD 5.1K

FUEL CELL GPC PURGE SEQ START PNL R11U S1

PF 1 (PF 1) (PF 2) V45K0815Y (K0825Y) (K0835Y)

PF 1 (PF 1) (PF 2) V45K0816Y (K0826Y) (K0836Y)

FC1 (2, 3) PURGE SW-GPC
FC1 (2,3) O_2 FLOW
FC1 (2,3) H_2 FLOW
FC1 (2,3) CURRENT

FC AUTO PURGE-ON
FC H_2 VENT LINE TEMP1
FC H_2 VENT LINE TEMP2
FC O_2 PURGE LINE TEMP

OF MDM PCMMU

FC2 FC3

START LINE HTRS ON LINE TEMP CHKS TIMER 27 MIN FC1 PURGE FC2 PURGE FC3 PURGE TIMER 30 MIN LINE HTRS OFF STOP

TEMP CHECK VS TIMER

FLOWMETER CHECKS VS CURRENT TO VERIFY VALVES OPEN AND CLOSE

LINE HTRS ON AFTER PURGE SEQ START CHECK

CHECK FAILS CMD HTRS OFF STOP SEQ

IF CHECK FAILS CMD VLVS CLOSE HTRS REMAIN ON

CHECK FAILS COMMAND HEATERS OFF, COMMAND VALVES CLOSED

SM ALERT PNL F7 (BLUE)

PF 2 V72K6050Y V92K0634X

V45 X0804E OF4 NA FUEL CELL AUTO PURGE-ON 1=ON 1 S/S F

V45K0604Y (F) V45K0605Y (F) PF 2

FUEL CELL PURGE HEATER GPC ON OFF PNL R11U S2

$V_{CNTLBC1}$ 1.2K

$V_{CNTLCA1}$ 1.2K

V_{ESS2CA} FD 5.1K

V_{HNB} HPC2 V_{HNC} HPC3 V_{HNA} HPC1

RPC 5A

$FC2\ O_2$ PURGE $FC3\ O_2$ PURGE 16.9W

V45 X0804E OF4 NA FC O_2/H_2 PURGE HTRS GPC-A ON 1=ON 1 S/S F

V45 S0601E OF4 NA FC O_2/H_2 PURGE HTRS MNL-A ON 1=ON 1 S/S F

V76 X0156E OF2 NA FC H_2/O_2 PURGE HTR RPC B ON 1=ON 1 S/S

V76 X0155E OF1 NA FC H_2/O_2 PURGE HTR RPC A ON 1=ON 1 S/S

V76 X0157E OF3 NA FC H_2/O_2 PURGE HTR RPC C-1 ON 1=ON 1 S/S

V76 X0158E OF3 NA FC H_2/O_2 PURGE HTR RPC C-2 ON 1=ON 1 S/S

2.2K 1.8K

O_2 PORT OVERBOARD X_0=640.9 Y= -105.4(PORT) Z=339.2

H_2 PORT OVERBOARD X_0=640.9 Y=105.4(STBD) Z=339.2

V45 T0700A OF3 OM1 FC H_2 VENT LINE TEMP 2 0 TO 400°F 1 S/S F

V45 T0700A OF3 OM1 FC O_2 PURGE LINE TEMP 0 TO 400°F 1 S/S F

V45 T0699A OA2 OA2 FC H_2 VENT LINE TEMP 1 0 TO 400°F 1 S/S F

V45 T0182A OF3 OF3 FC1 ALT H_2O LINE TEMP 0 TO 250° 1 S/S F

V45 T0282A OA1 OH2 FC2 ALT H_2O LINE TEMP 0 TO 250° 1 S/S F

GPC PURGE SEQ ON GRAY-SEQ ON BP-SEQ OFF PNL R12 DS1

F15 3A

V45 S0441E OF4 NA FC H_2O LINE HTRS A-AUTO 1=ON 1 S/S F

5.1K 13.8W 19.2W 1.7W

FC2 H_2 PURGE FC3 H_2 PURGE

5.5-8 PSID

TO ECLSS TANK B H7 6.4

HTR A 6.3W HTR B 6.3W

FC2 ALT H_2O PATH FC3 ALT H_2O PATH ALT PRI

V45 P0187A OF3 OF3 FC ALT H_2O LINE PRESS 0 TO 50 PSIA 1 S/S

V45 S0442E OF4 NA FC H_2O LINE HTRS B AUTO 1=ON 1 S/S

OPEN 90°F CLOSE 70°F

FUEL CELL H_2O LINE HEATER A AUTO B AUTO OFF PNL R11U S9

OPEN 75°F CLOSE 55°F

$V_{CNTLAB1}$ 1A $V_{CNTLBC1}$ 1A

V_{HNA} HPC1 F52 10A F17 (F17) 3A F5 (F14) (F8)

V_{MNC} HPC3 F13 10A F11 3A (F13) (F3)

F18 (F18) 3A (F18)

FC2 PRODUCT H_2O FC3 PRODUCT H_2O

HTR A 22.3W HTR B 22.3W HTR A-30W 55 TO 75°F

HTR A-3.3W HTR B-3.3W

V45 T0422A OF2 OH3 FC2 H_2O RLV VLV TEMP 0 TO 250°F 1 S/S F

V45 T0432A OF3 OH2 FC3 H_2O RLV VLV TEMP 0 TO 250°F 1 S/S F

H_2O RLF VALVS CRACK AT 45 PSIA FULL OPEN AT 51 PSIA RESET AT 43 PSIA 12 LB/HR MIN

V45 X0462E OA3 NA H_2O LINE PH 1=PH HIGH 1 S/S F

HTR A-17W HTR B-17W

TO H_2 SEPARATOR H7 6.4 SUPPLY WATER STORAGE

V45 T0450A OF3 OF3 H_2O RELIEF LINE TEMP 0 TO 250°F 1 S/S F

V45 T0412A OF1 OH1 FC1 H_2O RLF VLV TEMP 0 TO 250°F 1 S/S F

RLF VLV HTR A-3W RLF VLV HTR B-3W 70 TO 90°F

FUEL CELL H_2O RELIEF HEATER A AUTO B AUTO OFF PNL R11U S10

$V_{CNTLAB1}$ 1A $V_{CNTLBC1}$ 1A

V45 T0456A OF3 OH3 FC H_2O RLF NOZ TEMP B 0 TO 450°F 1 S/S F

V45 T0455A OF2 OH2 FC H_2O RLF NOZ TEMP A 0 TO 450°F 1 S/S F

V45 S0445E OF4 NA FC H_2O RLF HTRS A-AUTO 1=ON 1 S/S F

V45 S0446E OF4 NA FC H_2O RLF HTRS B-AUTO 1=ON 1 S/S F

V45 T0181A (OF2) (OF3) (T0281A) (OM2) (T0381A) (OM2) FC1 PRODUCT H_2O LINE TEMP 0 TO 250°F 1 S/S F

F3 3A (F10) (F10) F4 3A F42 5A

FC'S 2 AND 3 RLF VLV HTRS A HAVE SAME CONTROL CIRCUIT AS SHOWN FOR FC1

OPEN 90°F CLOSE 70°F

TEMPERATURE CONTROLLER (SEE LEFT)

F44 3A (F5) (F4) F4 3A F12 1A F3 3A

(E) (N) (H)

B TEMPERATURE CONTROLLER (TYPICAL)

POWER SUPPLY UNDER LIMITS REF OVER LIMITS REF E N H

Ex 171 TO 207°F Nx 198 TO 234°F Hx 270 TO 294°F

FC'S 2 AND 3 RLF VLV HTRS B HAVE SAME CONTROL CIRCUIT AS SHOWN FOR FC1

V45 X0461E OF2 NA FC H_2O NOZ SEC HTR ON 1=ON 1 S/S

V45 X0460E OF2 NA FC NOZ OVER TEMP 1=ON 1 S/S

5.1K

H2O VENT LINE HTR B 7.5W

H2O VENT LINE HTR A 7.5W

BARREL HTR B 5.6W BARREL HTR A 5.6W

NOZZLE HTR B 44.7W NOZZLE HTR A 44.7W

H_2O VENT OVERBOARD X_0=631 Y=131 Z=339

DSC OM 2 DSC OM 3

MN B OPERATIONAL INST SIG CONDR OH 1/2 B 5A PNL 015B C84 V_{HNB} 015AB

MN A OPERATIONAL INST SIG CONDR OH 1/2 A 5A PNL 014B C83 V_{HNA} 014AB

MN B OPERATIONAL INST SIG CONDR OH3 A 3A PNL 015B CB37 V_{HNB} 015AB

MN C OPERATIONAL INST SIG CONDR OH3 B 3A PNL 016B CB31 V_{HNC} 016

SIGNAL STRENGTH MAIN VOLTS A B C ESS VOLTS 3AB 2CA 1BC FUEL CELL VOLTS/AMP 1 2 3

PNL F9 S2

DC AMPS SIG STR PNL F9 H3

DC VOLTS PNL F9 H2

NOTES: 1. RESERVED

BFS PURGE RTC CMDS (CMD GROUP 1):
MRTC - ALL VALVES OPEN AND HEATERS ON 5410
HEATERS - ON 5406
HEATERS - OFF 5407
FC1 VALVES - OPEN 5404
FC1 VALVES - CLOSE 5405
FC2 VALVES - OPEN 5402
FC2 VALVES - CLOSE 5403
FC3 VALVES - OPEN 5400
FC3 VALVES - CLOSE 5401

THBU PURGE SEQ. START

DEFAULT PURGE TIMES ARE 2 MIN. MAY BE CHANGED VIA THBU

19. FOR VENDOR DRAWING REFERENCES SEE TABLE 3-1

FC SHUNT TESTED AT 3000 AMPS FOR 1 SECOND WITHOUT CLEARING

FC'S 2 AND 3 H_2O ALT LINE HTR'S A AND B HAVE SAME CONTROL CIRCUIT AS SHOWN FOR FC1

RELIEF NOZZLE HTR CONTROL NORMAL RANGE ±153-243

CONNECTION PINS TO ACTIVATE RELAY K7

FC	MDM	PLUG	JACK	PIN
1	LF1	59	2	17
2	LF1	59	2	72
3	LF1	63	6	72

HEATER SYSTEM A DISCONNECTED

THE TEMPERATURE CONTROLLER CONTAINS COMPARATOR CIRCUITS COMPARING REFERENCE UNDER AND OVER LIMIT TEMPS TO MEASURED TEMPS. IF OVER TEMP, BOTH HEATER CONTROLLERS ISSUE SHUT OFF DISCRETES

CONTROLLER	TEMP RANGE
HIGH	210 - 297°F
NORM	198 - 234°F
LOW	171 - 207°F (NOMINAL OPERATING RANGE)

FC3 AUTO PURGE COMMANDS ROUTED THRU PF 2

O_2 VENT LINE TEMP >69.9°F, H_2 VENT LINE TEMP 1 >79°F AND H_2 VENT LINE TEMP 2 >40°F BEFORE 27 MIN

PURGE FLOW EQUAL TO TOTAL REACTANT FLOW MINUS FC USAGE. FC USAGE CALCULATED BASED ON:
O_2 USAGE=.02106 X AMPS
H_2 USAGE=.002632 X AMPS
FLOW CHECKS ARE DISABLED IN SOFTWARE

THERMOSTAT LOCATED ADJACENT TO HEATER

IF BYPASS VALVE DOES NOT ACTIVATE DURING STARTUP DUE TO K3A FAILURE STARTUP HEATER IS LOCKED OUT TO PREVENT LOCALIZED COOLANT BOILING

ONE VALVE CONTROLS O_2 PURGE AND DUAL FLOW TO STACK. DURING NORMAL OPS THE DUAL FLOW IS OPEN AND THE PURGE IS CLOSED. IN THE PURGE POSITION, THE DUAL FLOW IS CLOSED AND THE PURGE IS OPEN

TYPICAL 1 CELL OF 32 CELLS IN SERIES IN ONE SUBSTACK. 3 SUBSTACKS MAKE UP ONE FUEL CELL STACK

EACH REACTANT LINE MONITORS THE OTHER'S PRESSURE AND REGULATES ACCORDINGLY. O_2 PRESSURE IS MAINTAINED 1-2 PSIA ABOVE H_2

HEATER LOCATED ADJACENT TO EXHAUST PORT TO PREVENT FREEZING IN PORT. HEATER A DISABLED

HEATER LOCATED ADJACENT TO RELIEF VALVE TO PREVENT FREEZING IN PORT

RELAY K8 ENERGIZED BY START SWITCH UNTIL COOLANT PUMP ON AND COOLANT PUMP STATUS INDICATES GRAY

* 4 FUEL CELL 1

SIGNATURE	DATE	NATIONAL AERONAUTICS AND SPACE ADMINISTRATION LYNDON B. JOHNSON SPACE CENTER HOUSTON, TEXAS
DSGN K. CHARLSON	05-25-79	
DR		
ENGR L. HINTER		FUEL CELL
ENGR	5/13/96	
APP	5/13/96	
APP		SPACE SHUTTLE / DWG NO 3.4
CADS S.K. Kimbrell	6-17-96	ALL
LTR E - PCN 6		126.5 X 34 / PAGE / SHEET 1 OF 2

BASIC REV E-6

FUEL CELL

INTEGRATED DUAL GAS REGULATOR MODULE

ORBITER GSE

GSE ORBITER

TIMER MODULE

PORT	NORMAL FLOW	FLOW
A	OPEN	CLOSED
B	CLOSED	OPEN
C	OPEN	OPEN

DUAL FLOW CONTROL/O_2 PURGE VALVE

VOL = 323 IN.^{3} IN FC	
ΔP = 10 PSI MAX	
ΔP SW CLOSES	5 ± 1 PSID
ΔP SW OPENS	2 ± 1 PSID
COOLANT PUMP FLOW	1500PPH
PUMP SPEED	15000RPM

ACCUMULATOR 96 IN.^{3} MAX

27 IN.^{3}

H_2

O_2

H_2 PREHEATER

O_2 PREHEATER

SUSTAINING HEATER 870 WATTS ON STACK OUT TEMP 191°F OFF°F ABOVE ON TEMP

STARTUP HEATER 1771 WATTS ON AT FC STARTUP OFF STACK OUT TEMP 198°F OR STACK IN TEMP 212°F

STACK INLET TEMP CONTROL VALVE NO BYPASS FLOW 190° F MAX (70 PCT) BYPASS FLOW 170° F

HOT PREHEAT VALVE NO HOT FLOW 152° F MAX (100 PCT) HOT FLOW 140° F

CONDENSER EXIT TEMP CONTROL VALVE NO BYPASS FLOW 160° F MAX (100 PCT) BYPASS FLOW 145° F

COLD PREMIXING VALVE NO HOT FLOW 101° F MAX (100 PCT) HOT FLOW 90° F

FREON COOLANT LOOP ONE

FREON COOLANT LOOP TWO

ATCS/FC HX

COOLANT FILL LOOP FILTER 100µA

MAX 140°F OMOH 110°F AT 54KW

REF DWG 2.2-1 FOR SWITCH OPERATION

REF DWG 2.2-1 FOR SWITCH AND RELAY OPERATION

ASPIRATORS

SEPARATOR

PUMP

RECYCLE TUBE

CONDENSER

MOTOR

POWER FROM AC CB-S

CONDENSATE WATER TRAP (WICK)

10.75 SCFM

AP VALVE (5 PSID ABOVE H2 PRESSURE) 10.1 LB/HR MAX AT 40 PSIA MAX

FROM AC CB-S ΦA ONLY

H_2 PURGE VALVE 0.6 LB/HR 150 – 164°F 0.17 LB/HR H_2O

DUAL FLOW CONTROL/O_2 PURGE VALVE 3.3 LB/HR 165 TO 215°F 0.21 LB/HR H_2O

59 TO 60 PSIA

60 TO 62 PSIA

67 PSIA

69 PSIA

100 TO 120 PSIA

100 TO 120 PSIA

15µL

15µL

H_2 PURGE VALVES

O_2 PURGE VALVES

O_2 PURGE VALVE

O_2 PURGE VALVE CONTROL

H_2 PURGE VALVE CONTROL

BYPASS VALVE 650 PPH FLOW CONTROL VALVE FULL OPEN 190° F FULL CLOSED 209° F 1100 PPH

STARTUP

FROM O_2 STORAGE -260 TO +170°F 100 TO 1050 PSIA

FROM H_2 STORAGE -402 TO +170°F 100 TO 335 PSIA

30 TO 35 PSID

FUEL CELL REACT VLV

FUEL CELL REACT VLV

CNTL BC1 (CA1)

CNTL BC2 (CA2)

TIMER START

TIMER RESET

TIMER OUT

ENERGIZED AFTER TIMED ONBOARD TIMER

REF PWR

TO H_2O PUMP AND H_2O SEPARATOR

TO PH SENSOR 0A ONLY

COOLANT INLET TEMP SENSE ENTERING STACK

COOLANT OUT TEMP SENSE EXITING STACK

COOLANT TEMP FROM STACK

COOLANT TEMP EXITING STACK

FUEL CELL STATUS

FC1 COOL PUMP STATUS

FC1 START UP HEATER INHIBIT

FC1 POWER

FC1 CURRENT

FC1 VOLTAGE

FC1 H_2O CONDITION

FC1 EXIT TEMP

FC1 H_2 PURGE VLVS OPEN A

FC1 H_2 PURGE VALVE OPEN A

FC1 H_2 PUMP STATUS

FC1 O_2 FLOW

FC1 H_2 FLOW

FC1 ALT H_2O LINE TEMP

FC1 COOLANT PRESS

FC1 STACK IN TEMP

FC1 STACK OUT TEMP

FC1 RELIEF TEMP

FC1 ALT H_2O PATH

FC2 ALT H_2O PATH

FC3 ALT H_2O PATH

ESSIBC (2CA,3AB)

PAL F9

PAL C3

PAL RIIU

SIGNAL CONDITIONER

MAIN VOLTS

ESS VOLTS

ENABLE

INHIBIT

CLOSE

OPEN

CLOSE EWA

FUEL CELL REACT VLV

FUEL CELL REACT VLV

CLOSE

OPEN

CLOSE

OPEN

CLOSE

GSE

GSE

G

W V U T S R Q P O N

8 7 6 5 4 3 2 1

CRYO FUEL CELL 1 (2,3) REAC

C&W ELEC

RED

FUEL CELL REAC

PNL F7A2
O_2 REACTANT VALVE-CLOSED
H_2 REACTANT VALVE-CLOSED

FC3 FC2

5.1K

V45 X1155E 0F4 NA
FC1 O_2 REAC VLV CLOSED
1=OPEN 1 S/S C&W

(X1155E) 0F4/NA
(X1160E) 0F4/NA

V45 X2155E 0F4 NA
FC1 H_2 REAC VLV CLOSED
1=OPEN 1 S/S C&W

(X2155E) 0F4/NA
(X2160E) 0F4/NA

DS1 DS2 CL

(DS1) (DS9)
(DS2) (DS10)

OPEN CLOSE

PNL R1 S1 (S7) (S4)

$V_{CNTLAB1}$ (BC1) (CA1) 1.2K
$V_{CNTLAB2}$ (BC2) (CA2) 1.2K

GSE

V_{ESS1BC} (2CA,3AB) MPC1 (2,3)

13 $^{Z}Z_6$

FROM H_2 STORAGE
30 TO 35 PSID
100 TO 335 PSIA -402 TO +170°F

FROM O_2 STORAGE
30 TO 35 PSID
100 TO 1050 PSIA -260 TO +170°F

OPEN CLOSE

16(46,16) P RPC 10A C

15(45,15) P RPC 10A C

FUEL CELL REACT VLV 1 (2,3)
CLOSE
PNL C3 S16 (S17) (S18)

$V_{CNTL\ BC2}$ (CA2) (AB2) 1.2K
$V_{CNTL\ BC1}$ (CA1) (AB1) 1.2K

$V_{HNB\ HPC2}$ (HNC HPC3) (HNA HPC1)

CLOSE ENA 3A
PNL C3 CB1 (2,3)

13 $^{Z}Z_4$

V_{ESS1BC} (2CA,3AB) MPC1 (2,3) 1.2K

H_2 PREHEATER

O_2 PREHEATER

$^{V}Z_6$ 3 1

15μ

100 TO 12

69 PSIA

60 TO 62

DUAL FLOW CONTROL/O_2 PURGE VALVE

PORT	PURGE FLOW	NORMAL FLOW
A	OPEN	CLOSED
B	CLOSED	OPEN
C	OPEN	OPEN

3.3 LB/HR 185 TO 215°F 0.21 LB/HR H_2O

DUAL FLOW CONTROL/O_2 PURGE VALVE

ΔP = 10 PSI MAX
VOL = 323 IN.^{3} IN FC

COOLANT PUMP
MAX FLOW 1500PPH
PUMP SPEED 7500RPM

ΔP SW CLOSES 5 ± 1 PSID
ΔP SW OPENS 2 ±1 PSID

(P0247A) 0F2/0M2
(P0347A) 0F3/0M2

V45 P0147A 0F1 0M1
FC1 COOLANT PRESS
0 TO 100 PSIA 1 S/S F

ACCUMULATOR 96 IN.^{3} MAX

27 IN.^{3}

O_2

$^{V}Z_3$ 2 1

180 ±3°F NOMINAL

FLOW CONTROL VALVE FULL CLOSED= 190° F FULL OPEN= 205° F 1100 PPH

BYPASS VALVE OPEN DURING STARTUP

850 PPH

STARTUP HEATER 1771 WATTS ON: AT FC STARTUP OFF: STACK OUT TEMP 186°F OR STACK IN TEMP 212°F

0F3/0F3 0F1/0M2

V45 T0113A 0F2 0M3
FC1 STACK IN TEMP
-75° TO +300°F 1 S/S

SUSTAINING HEATER 870 WATTS ON: STACK OUT TEMP 183°F OFF: 2°F ABOVE ON TEMP

STACK INLET TEMP CONTROL VALVE NO BYPASS FLOW 190° F MAX (70 PCT) BYPASS FLOW 178° F

32% BYPASS

HOT PREMIXING VALVE NO HOT FLOW 153° F MAX (100 PCT) HOT FLOW 148° F

CONDENSER EXIT TEMP CONTROL VALVE NO BYPASS FLOW 160° F MAX (100 PCT) BYPASS FLOW 145° F

COLD PREMIXING VALVE NO HOT FLOW 101° F MAX (100 PCT) HOT FLOW 90° F

MAX 140°F GND: 110°F AT ≤4KW

(T0245A) 0F3/0M2
(T0345A) 0F1/0M1

V45 T0145A 0F2 0M2
FC1 COOL RETURN TEMP
0 TO 250°F 1 S/S C

COOLANT LOOP DRAIN

ORBITER GSE

COOLANT LOOP FILL

COOLANT FILL FILTER 100μ

GSE ORBITER

FREON COOLANT LOOP ONE

FREON OUT

ATCS/FC HX

FREON COOLANT LOOP TWO

FREON OUT

TO H_2 PUMP AND H_2O SEPARATOR

TO PH SENSOR 6A ONLY

$^{K}Z_4$ $^{L}Z_4$

V_{ESS1BC} (2CA,3AB) MPC1 (2,3) 1.2K

ΔP

$^{V}Z_7$ 3

AC1 (2,3) FUEL CELL 1 (2,3) PUMP

V_{AC1OA} (2OA) (3OA)
V_{AC1OB} (2OB) (3OB)
V_{AC1OC} (2OC) (3OC)

3A

PNL L4;C CB65 CB66 CB67

(CB68) (CB71)
(CB69) (CB72)
(CB70) (CB73)

12 COMMON Pth ACZ 6B $^{Z}Z_4$

YELLOW

FUEL CELL PUMP

PNL F7A2 COOLANT PUMP STATUS-PUMP OFF

C&W ELEC

FC2 FC3

5.1K

V45 X0145E 0F4 NA
FC1 COOL PUMP STATUS
1=ON 1 S/S C&W

(X0245E) 0F4/NA
(X0345E) 0F4/NA

COOLANT PUMP ΔP

GRAY-COOLANT PUMP ON
BP-COOLANT PUMP OFF

PNL R1 DS14 (DS15) (DS16)

YELLOW

FUEL CELL STACK TEMP

PNL F7A2 STACK OUT TEMP (172.5° F OR >243.75° F

C&W ELEC

FC2 FC3

DSC OM 1

V45 T0120A 0F1 0M1
FC1 STACK COOL OUT TEMP
-75° F TO +300° F 1 S/S C&W

(T0220A) 0F2/0M2
(T0320A) 0F3/0M2

FUEL CELL

FC2 FC3

1 2 3

PNL 02 S3

FUEL CELL STACK TEMP

300 200 100 0 -75

PNL 02 H4

FUEL CELL STARTUP HEATER 1 (2,3)

ENABLE

INHIBIT

PNL R11U S6 (S7) (S8)

$V_{HNA\ (B,C)}$ HPC1 (2,3)

V_{ESS1BC} (2CA,3AB) FD 1.2K

5.1K

V45 S0191E 0F4 NA
FC1 START UP HEATER INHIBIT
1=INHIBIT 1 S/S C&W

(S0291E) 0F4/NA
(S0391E) 0F4/NA

V_{ESS1BC} (2CA,3AB) MPC1 (2,3) 1.2K

READY FOR LOAD

GRAY-FC READY
BP-FC NOT READY

PNL R1 DS11 (DS15) (DS16)

5.1K

V45 X0105E 0F4 NA
FC1 READY
1=READY 1 S/S F

(X0205E) 0F4/NA
(X0305E) 0F4/NA

V_{ESS1BC} (2CA,3AB) FD 1.2K

FC1 (2,3) CNTLR ON OFF

PNL 014 S12 (S13) (S11)
PNL 015 (PNL 016)

F6 (5,5) 3A

V_{ESS1BC} (2CA,3AB) MPC1 (2,3)

5.1K

V45 S0180E 0F1 NA
FC1 CONTROL POWER
1=ON 1 S/S C&W

(S0280E) 0A2/NA
(S0380E) 0F3/NA

CRYO FUEL CELL 1 (2,3)

START STOP

PNL R1 S15 (S17) (S18)

V_{ESS1BC} (2CA,3AB) FD 1.2K

$V_{CNTLAB1}$ (BC1,CA1) 1.2K

$V_{CNTLAB2}$ (BC2,CA2) 1.2K

V_{ESS1BC} (2CA,3AB) MPC1 (2,3)

GSE

TIMER MODULE

TD 30 ± 2 SEC ON 1 SEC OFF

TIMER START

TIMER RESET

REF PWR

K10 GROUND THRU TIMER

ENERGIZED AFTER TIMER OUT

K6B R2 65Ω

K6A R1 65Ω

K1 K2 K3 K4 K5 K8 K9 K10

K3A

$^{N}Z_5$ 1 FROM COOLANT TEMP ENTERING STACK

COOLANT INLET TEMP SENSE ELECTRONICS

COOLANT OUT TEMP SENSE ELECTRONICS

$^{N}Z_5$ 2 FROM COOLANT TEMP EXITING STACK

DATE: 05/25/91	NAME: JMB	VERSION: BPT: 4
DATE: 10/23/91	NAME: MDU	VERSION: INK: 3
DATE: 11/04/91	NAME: BJT	VERSION: INK: 4

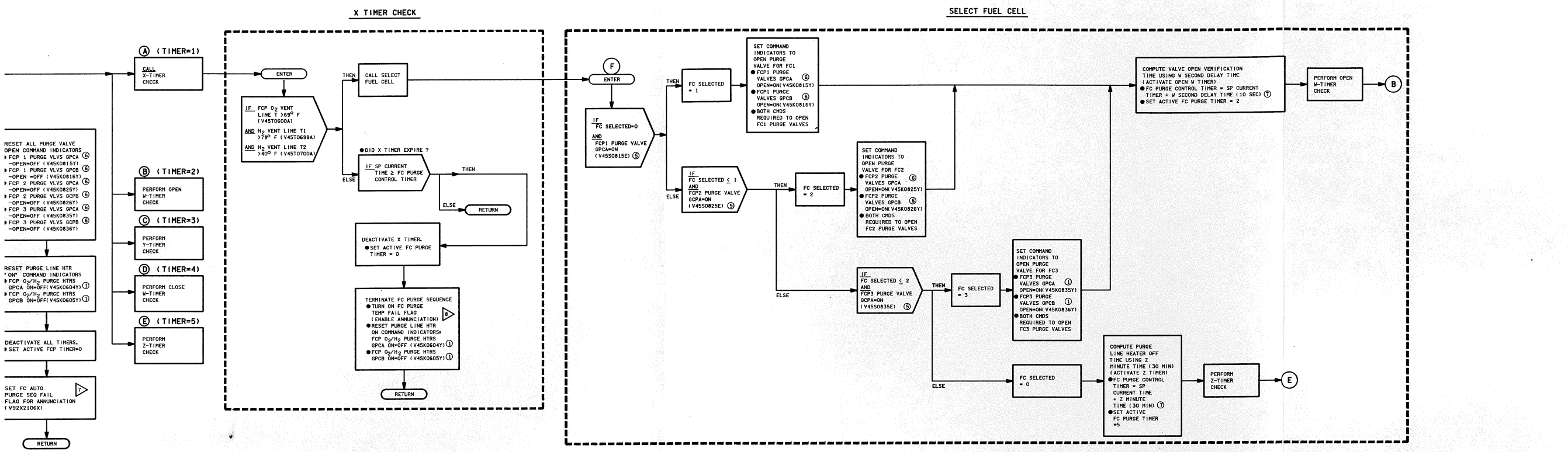

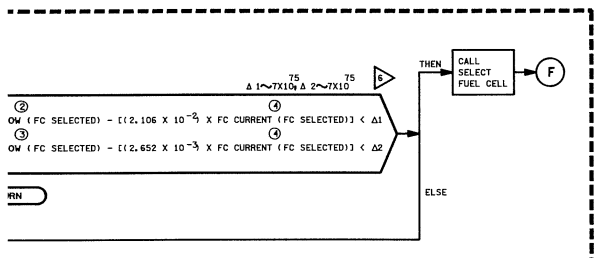

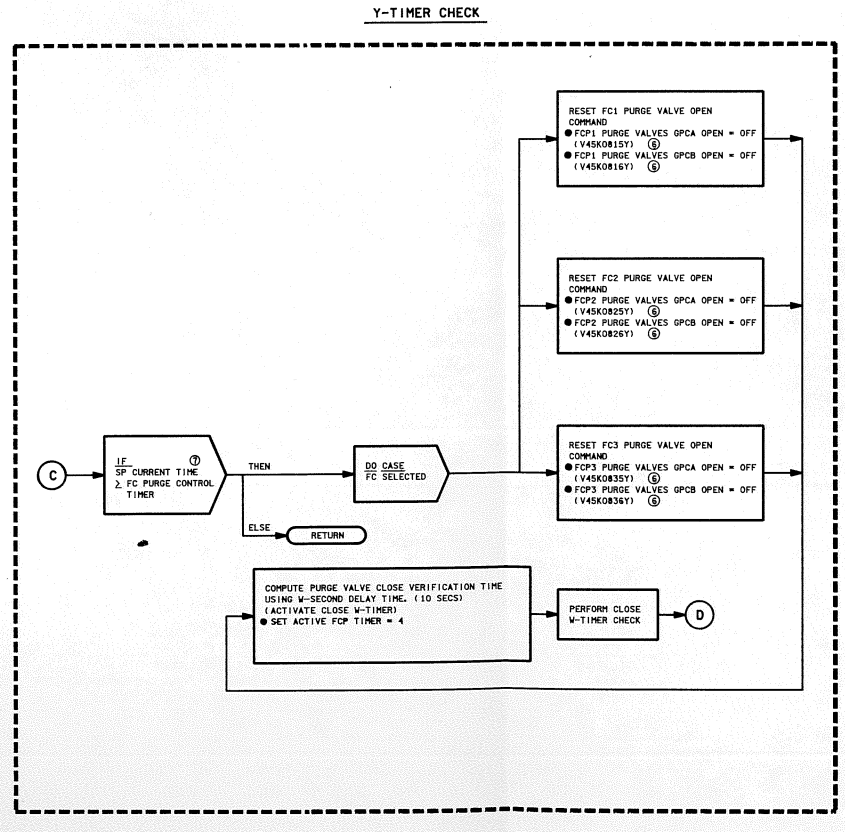

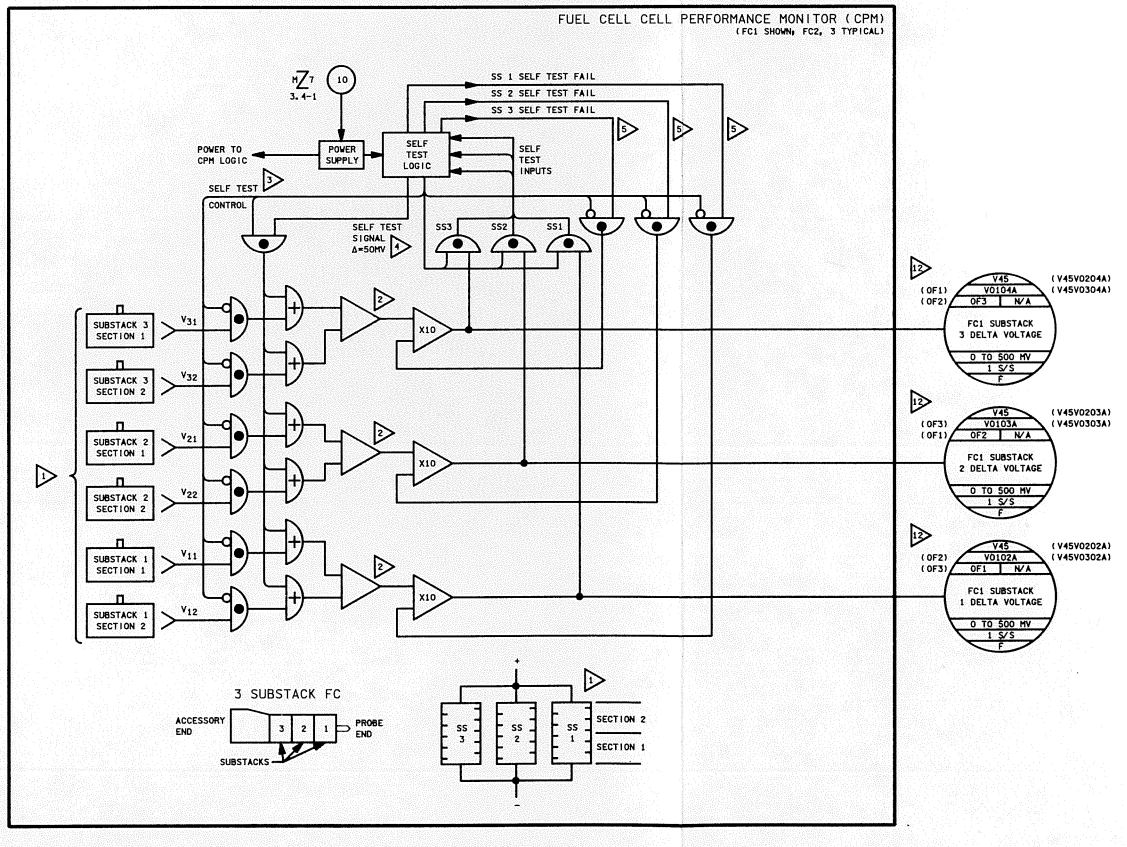

13 ANY OPS TRANSITION WILL TERMINATE FC PURGE SEQUENCE

12 AFTER 01-21 SOFTWARE INSTALLED, EXCEPT STS-46, MDM CHANNELIZATION IS OF4 FOR FC 1 ALL SUBSTACKS, OF1 FOR FC2, AND OF2 FOR FC3

11 V45X0804E FC AUTO PURGE ON DISCRETE, IS UPDATED IN THE PCMMU ONCE EACH SECOND AND IS ASYNCHRONOUSLY SAMPLED BY THE GPC ONCE EVERY TWO SECONDS. THE V45X0804E BIT MAY NOT BE SET IN THE GPC UNLESS THE GPC PURGE SEQUENCE START SWITCH IS HELD FOR THREE SECONDS AFTER THE TALKBACK INDICATES GRAY (PURGE HEATERS COMMANDED ON). THIS WOULD CAUSE THE FC PURGE SEQ SM ALERT

10. SEE TABLE 3-I FOR VENDOR DRAWING REFERENCES

9 CAUSES FC PURGE 1 (2,3) SM ALERT

8 CAUSES FC PURGE TEMP SM ALERT

7 CAUSES FC PURGE SEQ SM ALERT

6 Δ1 AND Δ2 ARE SET VERY LARGE IN ORDER TO EFFECTIVELY DISABLE THE O_2 AND H_2 FLOW CHECKS DURING PURGE. Δ3 AND Δ4 ARE SET VERY SMALL FOR THE SAME REASON

5 GENERATED IF DURING SELF TEST, ANY ΔVOLTS MEASUREMENT IS NOT BETWEEN 575 AND 425 MV AT OUTPUT OF X 10 AMPLIFIER, (DISPLAYED TO GROUND AND CREW AS 58 TO 43 MV). RESET AT BEGINNING OF EACH SELF TEST PERIOD. SELF TEST FAIL SIGNAL DRIVES THE OUTPUT TO OSH (TM TO 500 MV). THE FAIL SIGNAL IS RESET AT THE BEGINNING OF EACH SELF TEST PERIOD

4 SELF TEST SIGNAL OF 50 MV APPLIED TO CIRCUIT INPUTS FOR 2,350.5 SECONDS. SUBSTACK DELTA VOLTS MEASUREMENT INTERRUPTED DURING THIS PERIOD

3 SELF TEST OCCURS EVERY 721 MINUTES TO EACH CPM. (REGARDLESS OF WHETHER OR NOT IT HAS PREVIOUSLY FAILED SELF TEST)

2 DIFFERENTIAL AMPLIFIERS. OUTPUT ABSOLUTE VALUE OF VOLT DIFFERENCE BETWEEN SUBSTACK SECTIONS. CREW/GROUND ALERTS OCCUR IN SM. BFS AT ΔV=150MV

NOTES: 1 EACH SUBSTACK CONSISTS OF 32 SERIES CONNECTED CELLS. THE THREE SUBSTACKS ARE CONNECTED IN PARALLEL. THE CPM COMPARES THE VOLTAGE OF ONE-HALF OF A SUBSTACK (16 CELLS) TO THE OTHER HALF OF THE SAME SUBSTACK

4 FU CELL PRG 2

SIGNATURE		DATE	NATIONAL AERONAUTICS AND SPACE ADMINISTRATION LYNDON B. JOHNSON SPACE CENTER HOUSTON, TEXAS
DSGN KENNETH POGUE		5/11/81	
DR KENNETH POGUE		5/11/81	FUEL CELL AUTO PURGE AND CELL PERFORMANCE MONITOR
ENGR B. PAWLIK			
ENGR		11/1/91	
APP		11/1/91	
APP			SPACE SHUTTLE / DWG NO 3.4
OMNIPLAN S.K. Kinlaw		11-12-91	ALL
LTR E	PCN 1		82.5 X 34 / PAGE 3.4-2 / SHEET 2 OF 2

BASIC REV E-1

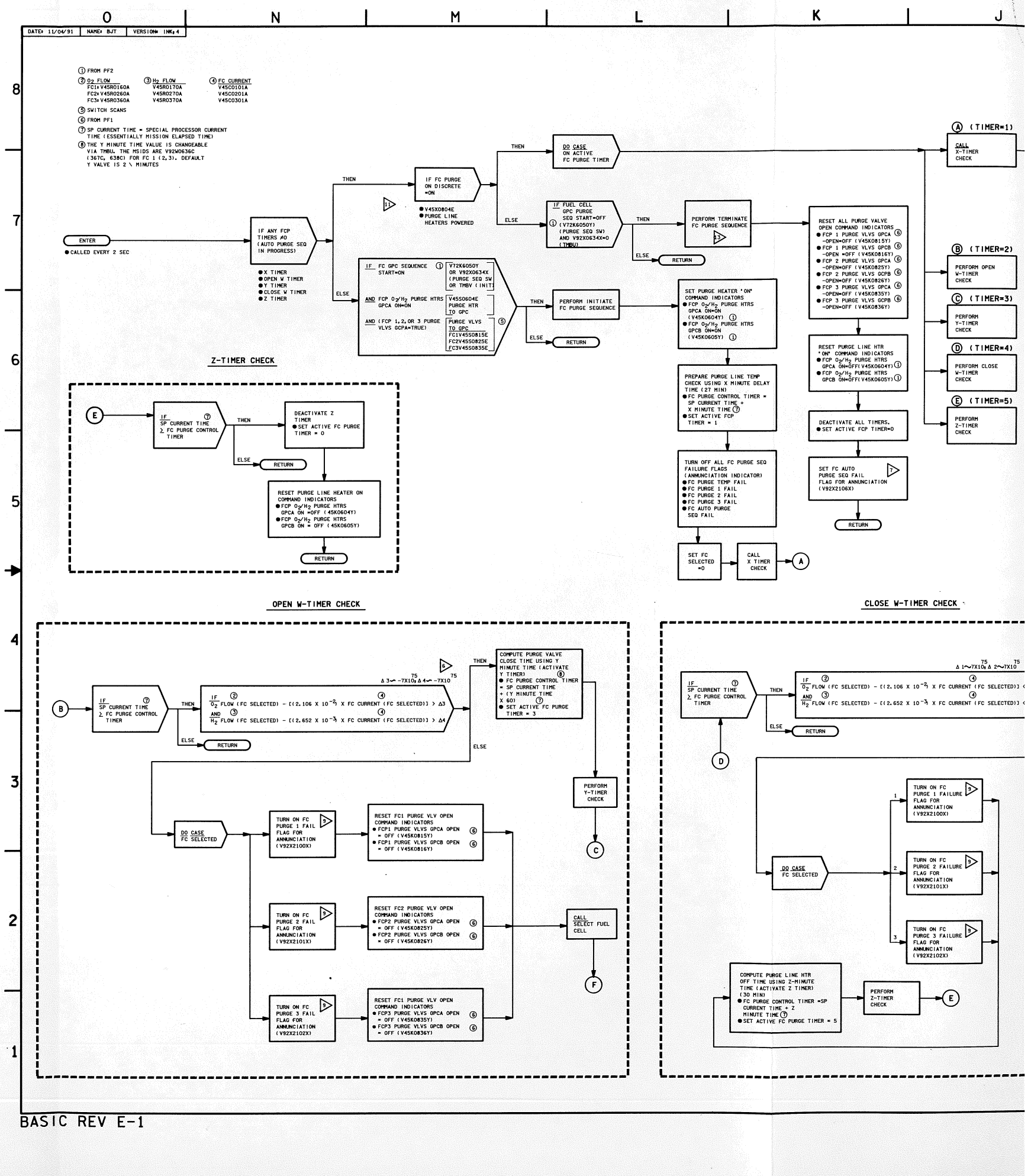
DATE: 11/04/91
NAME: BJT
VERSION# INK: 4
(1) FROM PF2
(2) O2 FLOW
FC1: V45R0160A
FC2: V45R0260A
FC3: V45R0360A
(3) H2 FLOW
V45R0170A
V45R0270A
V45R0370A
(4) FC CURRENT
V45C0101A
V45C0201A
V45C0301A
(5) SWITCH SCANS
(6) FROM PF1
(7) SP CURRENT TIME = SPECIAL PROCESSOR CURRENT TIME (ESSENTIALLY MISSION ELAPSED TIME)
(8) THE Y MINUTE TIME VALUE IS CHANGEABLE VIA TMBU. THE MSIDS ARE V92W0636C (36TC, 638C) FOR FC 1 (2,3). DEFAULT Y VALVE IS 2 ½ MINUTES
ENTER
● CALLED EVERY 2 SEC
IF ANY FCP TIMERS ≠0 (AUTO PURGE SEQ IN PROGRESS)
● X TIMER
● OPEN W TIMER
● Y TIMER
● CLOSE W TIMER
● Z TIMER
THEN
ELSE
IF FC PURGE ON DISCRETE =ON
● V45X0804E
● PURGE LINE HEATERS POWERED
DO CASE ON ACTIVE FC PURGE TIMER
IF FUEL CELL GPC PURGE SEQ START=OFF (V72K6050Y) (PURGE SEQ SW) AND V92X0634X=0 (TMBU)
PERFORM TERMINATE FC PURGE SEQUENCE
RETURN
IF FC GPC SEQUENCE START=ON
V72X6050Y OR V92X0634X (PURGE SEQ SW OR TMBV (INIT
AND FCP O2/H2 PURGE HTRS GPCA ON=ON
V45S0604E PURGE HTR TO GPC
AND (FCP 1,2,OR 3 PURGE VLVS GCPA=TRUE)
PURGE VLVS TO GPC FC1V45S0815E FC2V45S0825E FC3V45S0835E
PERFORM INITIATE FC PURGE SEQUENCE
RETURN
SET PURGE HEATER 'ON' COMMAND INDICATORS
● FCP O2/H2 PURGE HTRS GPCA ON=ON (V45K0604Y)
● FCP O2/H2 PURGE HTRS GPCB ON=ON (V45K0605Y)
PREPARE PURGE LINE TEMP CHECK USING X MINUTE DELAY TIME (27 MIN)
● FC PURGE CONTROL TIMER = SP CURRENT TIME + X MINUTE TIME
● SET ACTIVE FCP TIMER = 1
TURN OFF ALL FC PURGE SEQ FAILURE FLAGS (ANNUNCIATION INDICATOR)
● FC PURGE TEMP FAIL
● FC PURGE 1 FAIL
● FC PURGE 2 FAIL
● FC PURGE 3 FAIL
● FC AUTO PURGE SEQ FAIL
SET FC SELECTED =0
CALL X TIMER CHECK
RESET ALL PURGE VALVE OPEN COMMAND INDICATORS
● FCP 1 PURGE VLVS GPCA -OPEN=OFF (V45K0815Y)
● FCP 1 PURGE VLVS GPCB -OPEN =OFF (V45K0816Y)
● FCP 2 PURGE VLVS GPCA -OPEN=OFF (V45K0825Y)
● FCP 2 PURGE VLVS GCPB -OPEN=OFF (V45K0826Y)
● FCP 3 PURGE VLVS GPCA -OPEN=OFF (V45K0835Y)
● FCP 3 PURGE VLVS GCPB -OPEN=OFF (V45K0836Y)
RESET PURGE LINE HTR 'ON' COMMAND INDICATORS
● FCP O2/H2 PURGE HTRS GPCA ON=OFF(V45K0604Y)
● FCP O2/H2 PURGE HTRS GPCB ON=OFF(V45K0605Y)
DEACTIVATE ALL TIMERS, ● SET ACTIVE FCP TIMER=0
SET FC AUTO PURGE SEQ FAIL FLAG FOR ANNUNCIATION (V92X2106X)
RETURN
(A) (TIMER=1) CALL X-TIMER CHECK
(B) (TIMER=2) PERFORM OPEN W-TIMER CHECK
(C) (TIMER=3) PERFORM Y-TIMER CHECK
(D) (TIMER=4) PERFORM CLOSE W-TIMER CHECK
(E) (TIMER=5) PERFORM Z-TIMER CHECK
Z-TIMER CHECK
E
IF SP CURRENT TIME (7) ≥ FC PURGE CONTROL TIMER
DEACTIVATE Z TIMER ● SET ACTIVE FC PURGE TIMER = 0
RESET PURGE LINE HEATER ON COMMAND INDICATORS
● FCP O2/H2 PURGE HTRS GPCA ON =OFF (45K0604Y)
● FCP O2/H2 PURGE HTRS GPCB ON = OFF (45K0605Y)
OPEN W-TIMER CHECK
B
IF SP CURRENT TIME (7) ≥ FC PURGE CONTROL TIMER
IF (2) O2 FLOW (FC SELECTED) − ((2.106 X 10⁻²) X FC CURRENT (FC SELECTED)) > Δ3 (4)
AND (3) H2 FLOW (FC SELECTED) − ((2.652 X 10⁻³) X FC CURRENT (FC SELECTED)) > Δ4 (4)
Δ3 = 75 −7X10, Δ4 = 75 −7X10
COMPUTE PURGE VALVE CLOSE TIME USING Y MINUTE TIME (ACTIVATE Y TIMER) (8)
● FC PURGE CONTROL TIMER = SP CURRENT TIME + (Y MINUTE TIME X 60) (7)
● SET ACTIVE FC PURGE TIMER = 3
DO CASE FC SELECTED
TURN ON FC PURGE 1 FAIL FLAG FOR ANNUNCIATION (V92X2100X)
RESET FC1 PURGE VLV OPEN COMMAND INDICATORS
● FC#1 PURGE VLVS GPCA OPEN = OFF (V45K0815Y) (6)
● FC#1 PURGE VLVS GPCB OPEN = OFF (V45K0816Y) (6)
TURN ON FC PURGE 2 FAIL FLAG FOR ANNUNCIATION (V92X2101X)
RESET FC2 PURGE VLV OPEN COMMAND INDICATORS
● FCP2 PURGE VLVS GPCA OPEN = OFF (V45K0825Y) (6)
● FCP2 PURGE VLVS GPCB OPEN = OFF (V45K0826Y) (6)
TURN ON FC PURGE 3 FAIL FLAG FOR ANNUNCIATION (V92X2102X)
RESET FC1 PURGE VLV OPEN COMMAND INDICATORS
● FCP3 PURGE VLVS GPCA OPEN = OFF (V45K0835Y) (6)
● FCP3 PURGE VLVS GPCB OPEN = OFF (V45K0836Y) (6)
PERFORM Y-TIMER CHECK
C
CALL SELECT FUEL CELL
F
CLOSE W-TIMER CHECK
D
IF SP CURRENT TIME (7) ≥ FC PURGE CONTROL TIMER
IF (2) O2 FLOW (FC SELECTED) − ((2.106 X 10⁻²) X FC CURRENT (FC SELECTED)) < Δ1 = 75 −7X10, Δ2 = 75 −7X10 (4)
AND (3) H2 FLOW (FC SELECTED) − ((2.652 X 10⁻³) X FC CURRENT (FC SELECTED)) < Δ2 (4)
RETURN
DO CASE FC SELECTED
1 TURN ON FC PURGE 1 FAILURE FLAG FOR ANNUNCIATION (V92X2100X)
2 TURN ON FC PURGE 2 FAILURE FLAG FOR ANNUNCIATION (V92X2101X)
3 TURN ON FC PURGE 3 FAILURE FLAG FOR ANNUNCIATION (V92X2102X)
COMPUTE PURGE LINE HTR OFF TIME USING Z-MINUTE TIME (ACTIVATE Z TIMER) (30 MIN)
● FC PURGE CONTROL TIMER =SP CURRENT TIME + Z MINUTE TIME (7)
● SET ACTIVE FC PURGE TIMER = 5
PERFORM Z-TIMER CHECK
E

DATE: 10/10/90	NAME: VSH	VERSION: BPT; 2
DATE: 10/12/90	NAME: LAM	VERSION: INK; 1
DATE: 10/18/90	NAME: JDF	VERSION: INK; 2

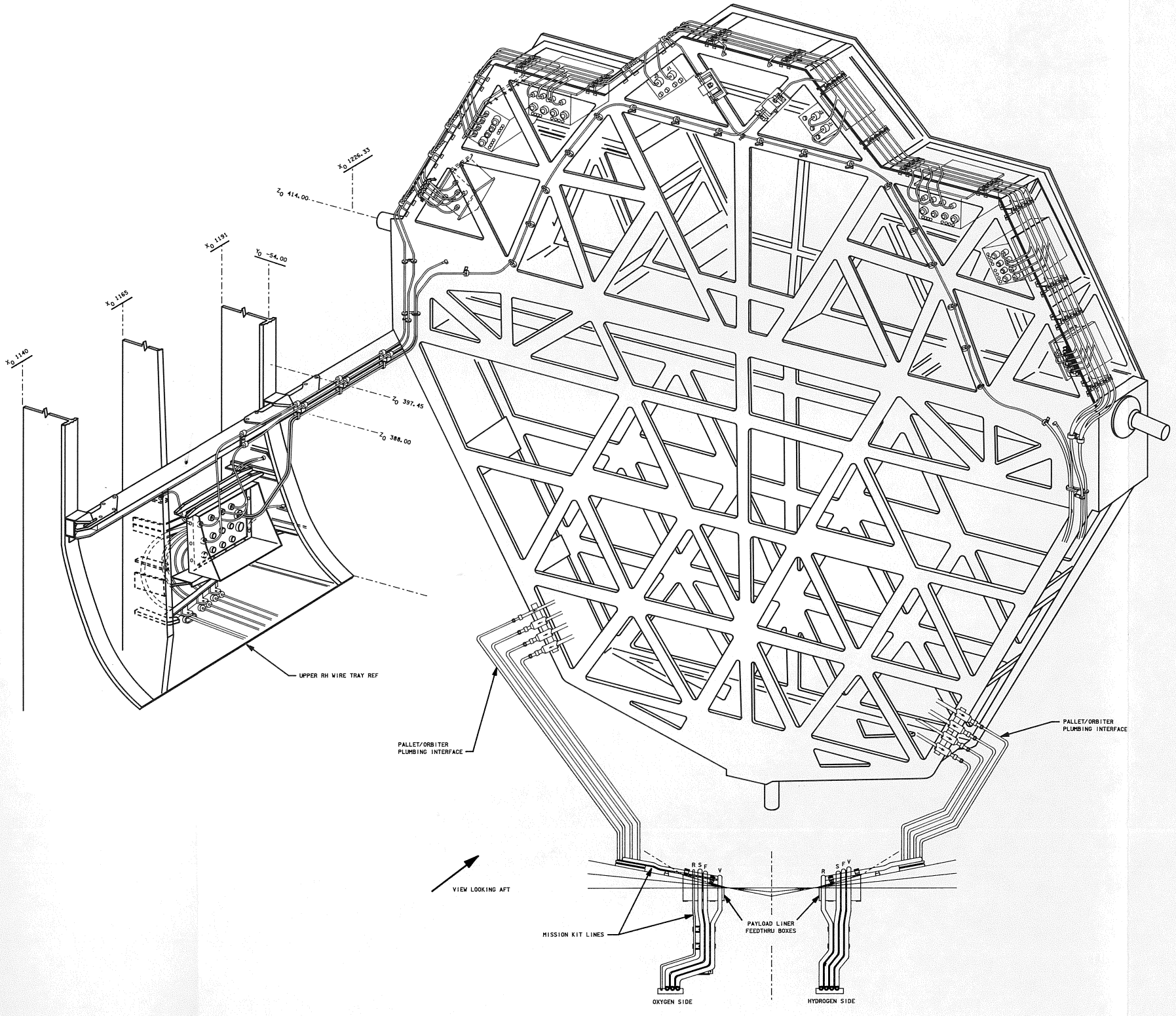

PALLET/ORBITER INTERFACE LAYOUT
CRYO AND AVIONICS

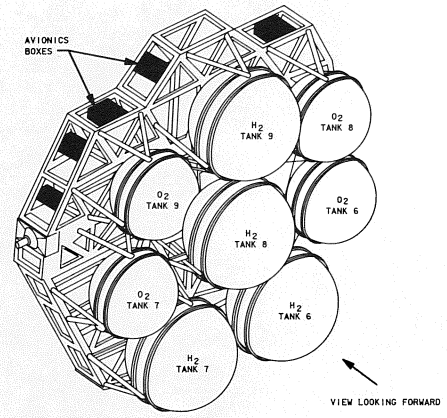

EDO PALLET/CRYO TANKS

2 EACH PANEL TYPE IS TYPICAL FOR TANKS 6,7,8,9

NOTES: 1. REFER TO TABLE 3-I FOR VENDOR DRAWING REFERENCES

5 EDO PALLET 1

SIGNATURE	DATE	NATIONAL AERONAUTICS AND SPACE ADMINISTRATION LYNDON B. JOHNSON SPACE CENTER HOUSTON, TEXAS	
DSGN VICKI S. HUNTER	10/1/90		
DR		EDO PALLET	
ENGR T.W. SCHAFER			
ENGR Todd W Schafer	10/17/90		
APP Paul M Fayer	10/18/90		
APP		SPACE SHUTTLE	DWG NO 3.5
OMNIPLAN S.K. Kimbrell	11-1-90	EDO	
LTR E	PCN	121 X 34	PAGE SHEET 1 OF 1

BASIC REV E

T S R Q P O N M L K J

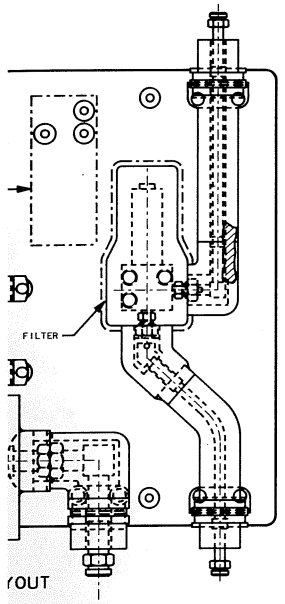

YOUT

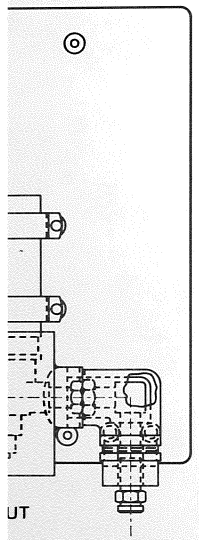

UT

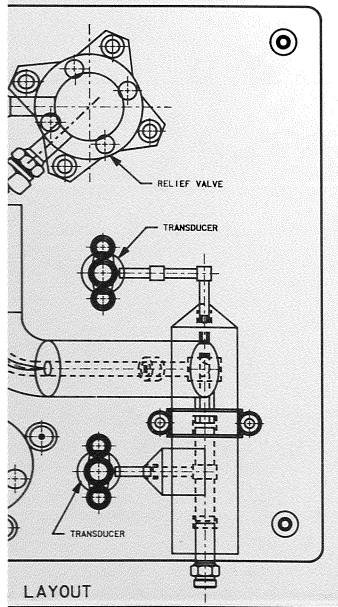

LAYOUT

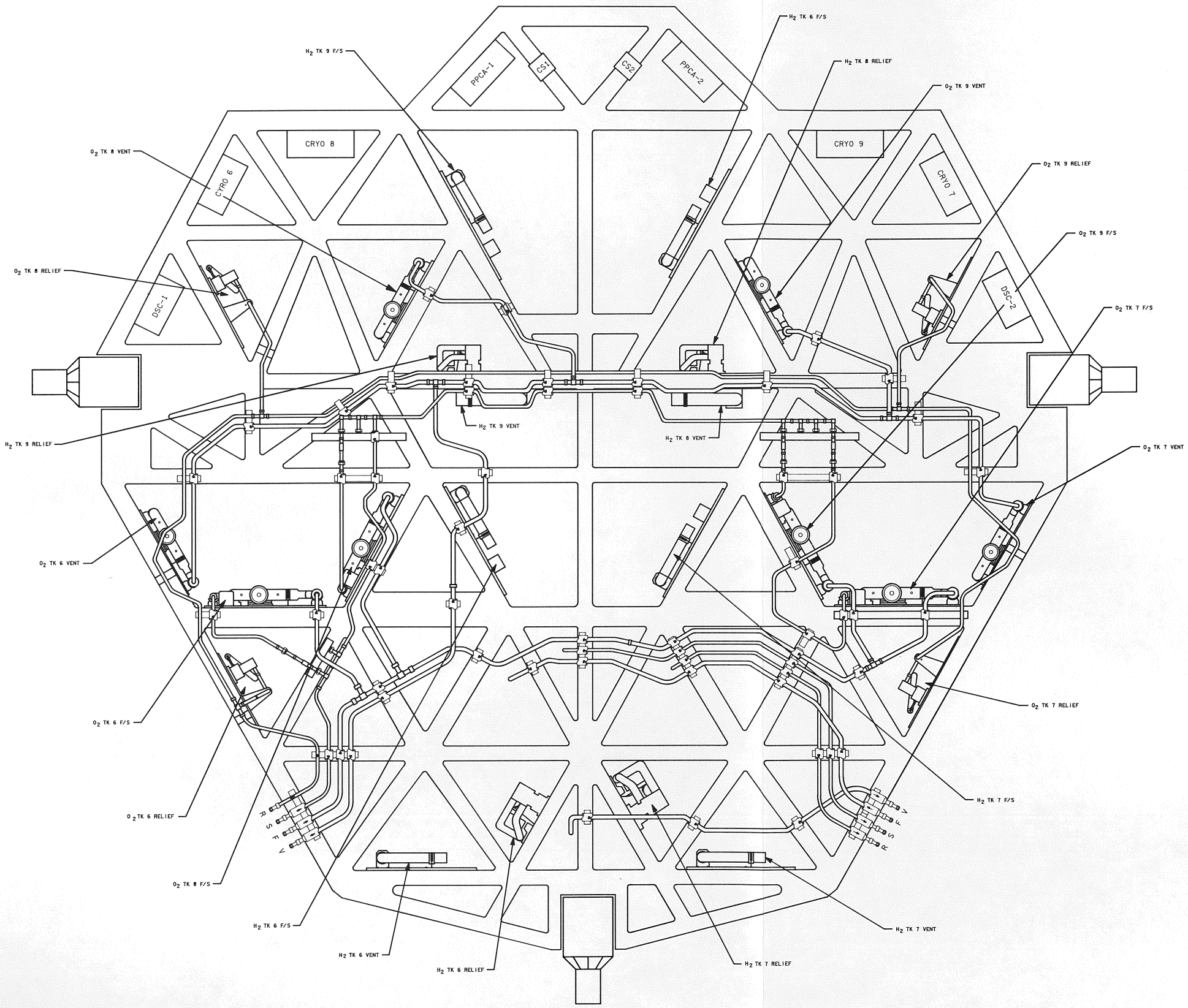

VIEW LOOKING AFT

EDO PALLET WITH VALVE PANELS AND AVIONICS BOXES

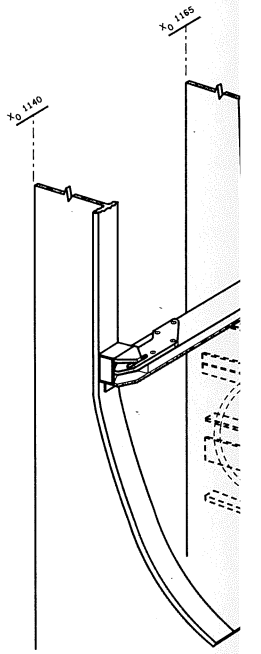

DATE: 10/18/90 | NAME: JDF | VERSION: INK.2

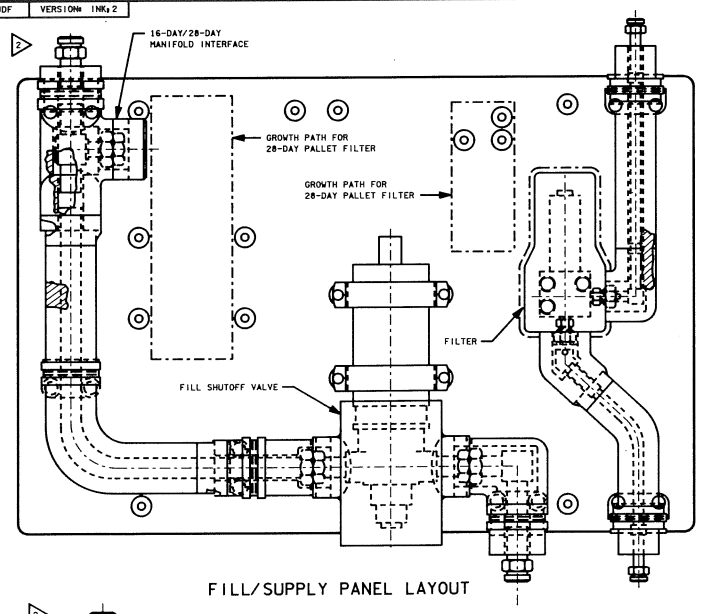

FILL/SUPPLY PANEL LAYOUT

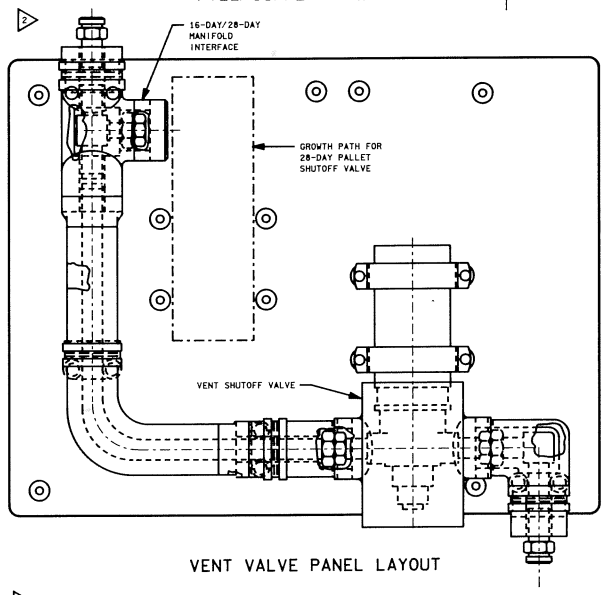

VENT VALVE PANEL LAYOUT

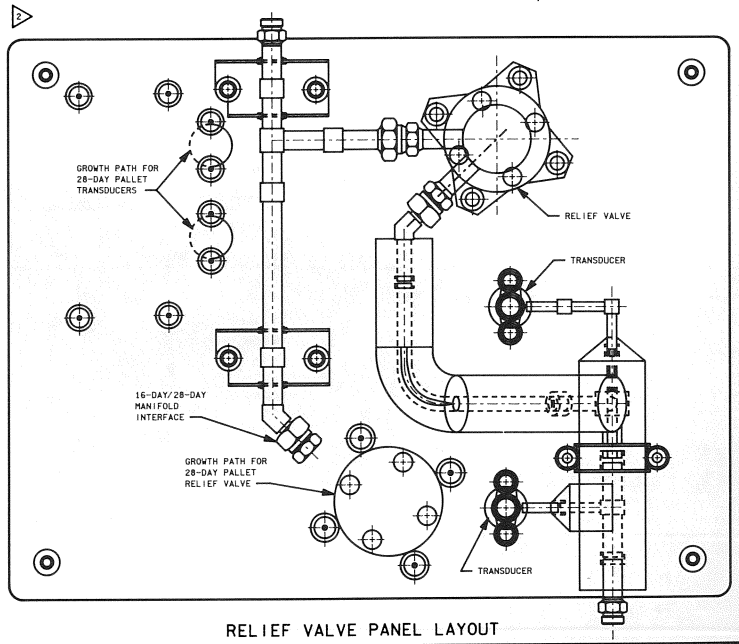

RELIEF VALVE PANEL LAYOUT

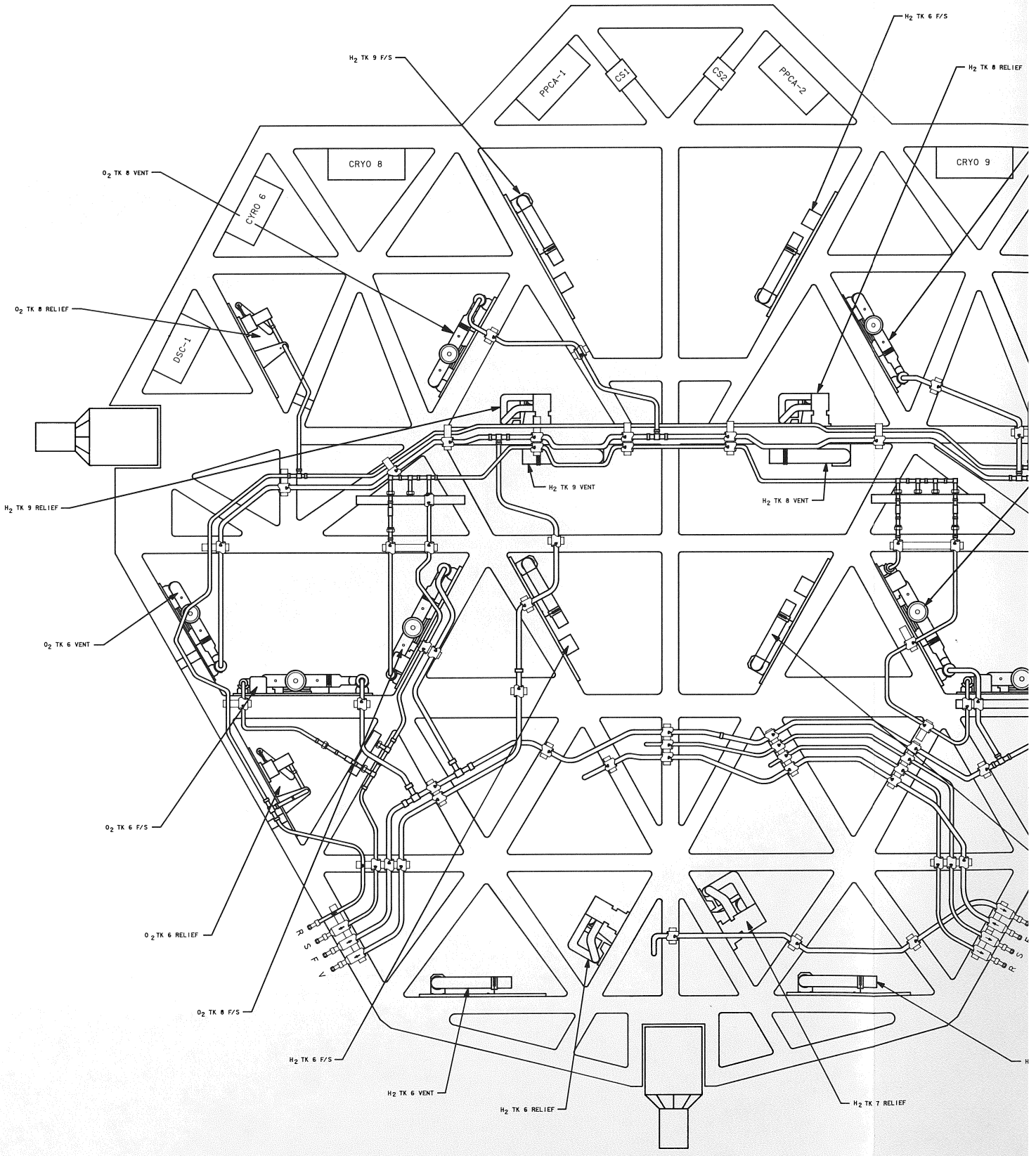

VIEW LOOKING AFT

EDO PALLET WITH VALVE PANELS AND AVIONICS BOXES

BASIC REV E

DATE: 01/05/93	NAME: JDF	VERSION: BPT$_R$1
DATE: 01/27/93	NAME: BB/SE	VERSION: INK$_R$1
DATE: 02/02/93	NAME: PSD	VERSION: INK$_R$2

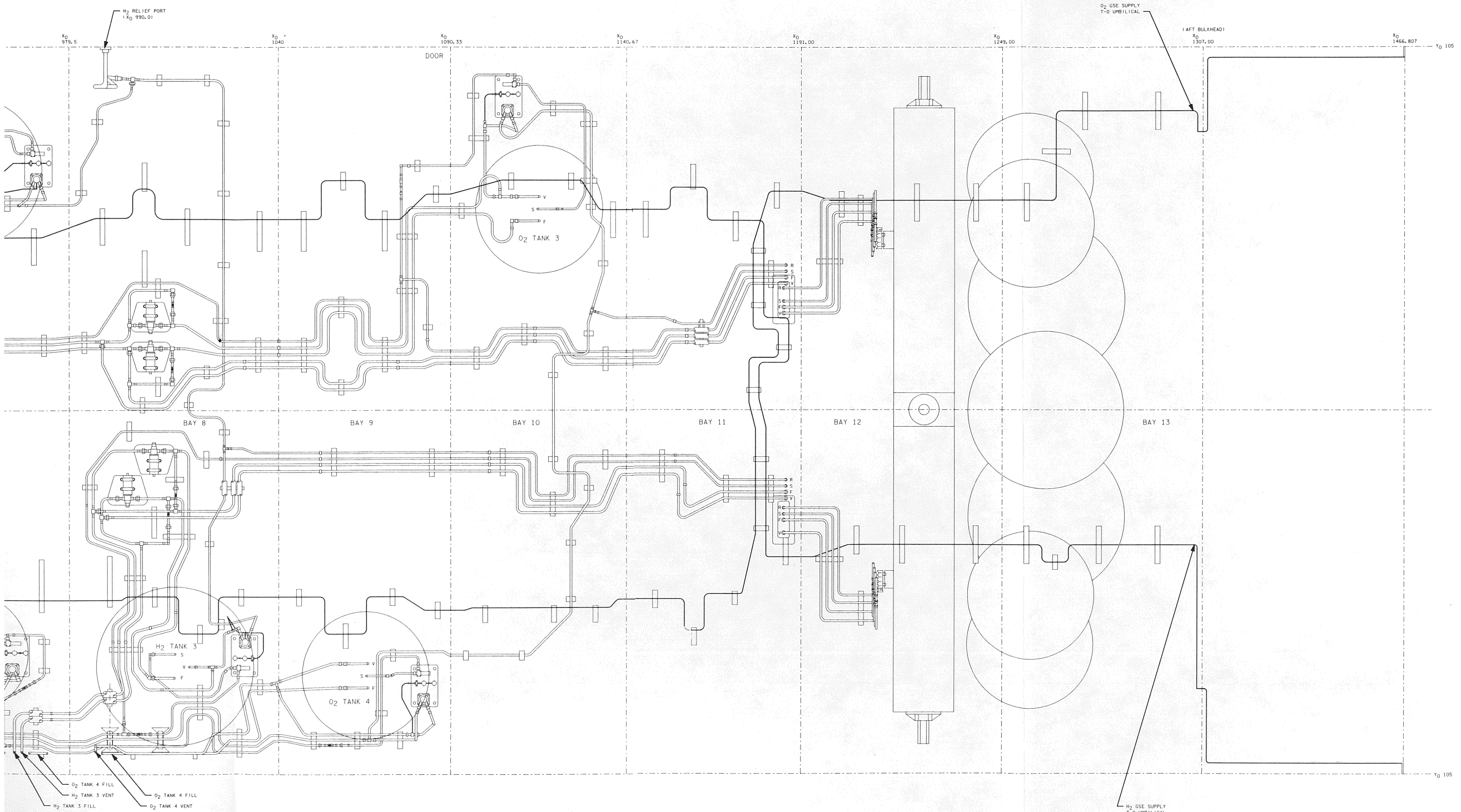

6 EDO CRYO PALLET PLUMBING

SIGNATURE		DATE	NATIONAL AERONAUTICS AND SPACE ADMINISTRATION LYNDON B. JOHNSON SPACE CENTER HOUSTON, TEXAS	
DSGN J. BLANCHARD		7/17/92		
DR BT VH JF				
ENGR L. FOX			EDO CRYO PALLET PLUMBING	
ENGR		2-6-93		
ARE		2-6-93		
APP			SPACE SHUTTLE	DWG NO 3.6B
OMNIPLAN		2-9-93	OV102	
LTR E	PCN 2		104.5 X 34	PAGE SHEET 1 OF 1

BASIC REV E-2

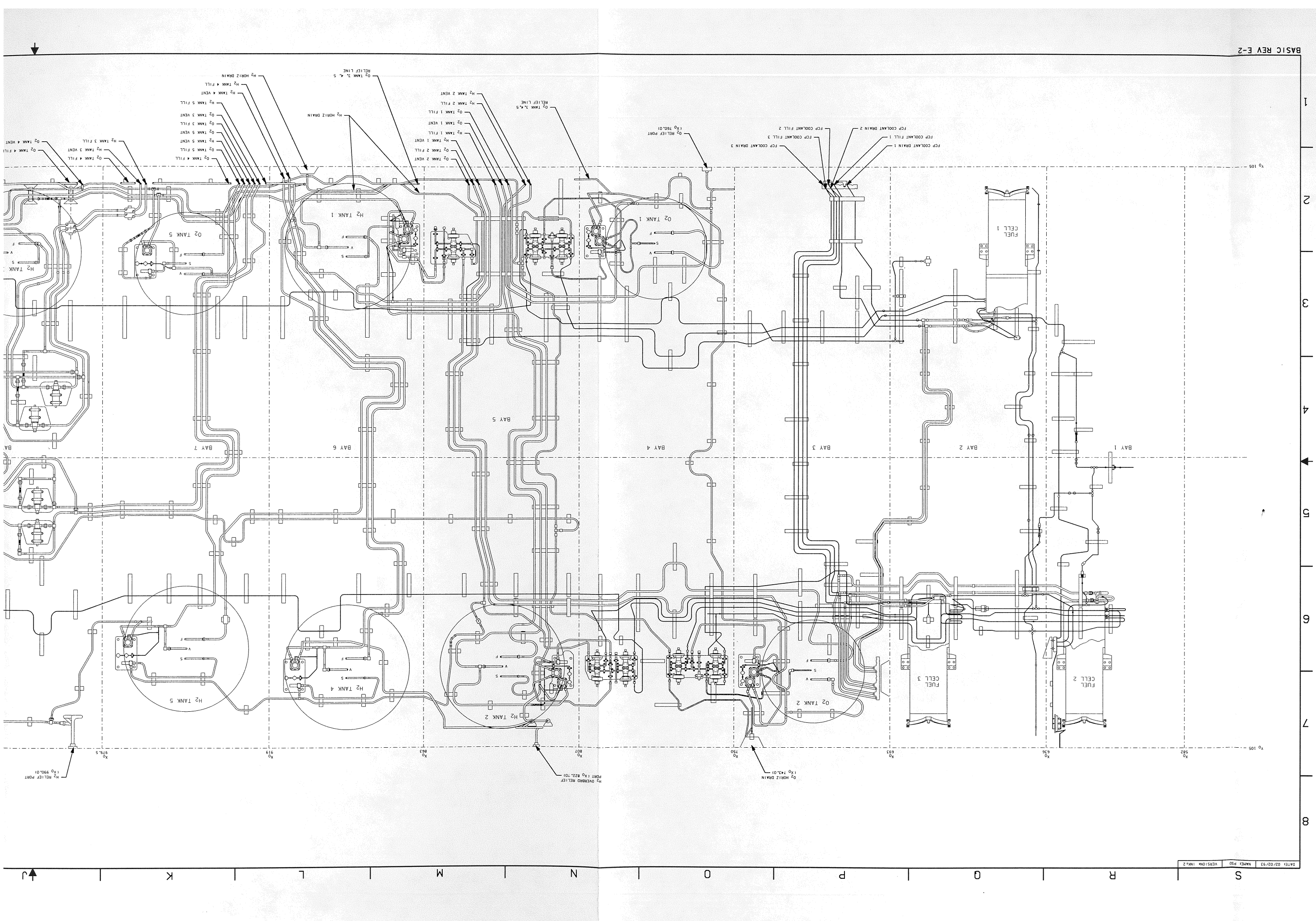
BASIC REV E-2
BAY 1
BAY 2
BAY 3
BAY 4
BAY 5
BAY 6
BAY 7
FUEL CELL 1
FUEL CELL 2
FUEL CELL 3
O2 TANK 1
O2 TANK 2
H2 TANK 1
H2 TANK 4
H2 TANK 5
O2 TANK 5
FCP COOLANT DRAIN 1
FCP COOLANT DRAIN 2
FCP COOLANT DRAIN 3
FCP COOLANT FILL 1
FCP COOLANT FILL 2
FCP COOLANT FILL 3
O2 RELIEF PORT (X0 780.0)
O2 TANK 1, 4, 5 RELIEF LINE
H2 HORIZ DRAIN
O2 TANK 2 VENT
O2 TANK 2 FILL
H2 TANK 1 VENT
H2 TANK 1 FILL
O2 TANK 1 VENT
O2 TANK 1 FILL
H2 TANK 2 VENT
H2 TANK 2 FILL
O2 TANK 1, 4, 5 RELIEF LINE
H2 HORIZ DRAIN
H2 TANK 4 FILL
H2 TANK 4 VENT
H2 TANK 5 FILL
H2 TANK 5 VENT
O2 TANK 3 FILL
O2 TANK 3 VENT
H2 TANK 5 FILL
H2 TANK 5 VENT
H2 TANK 3 FILL
O2 TANK 4 FILL
H2 TANK 3 VENT
O2 TANK 4 VENT
H2 RELIEF PORT (X0 990.0)
H2 OVERBRD RELIEF PORT (X0 822.78)
O2 HORIZ DRAIN (X0 743.0)
Y0 105
X0 582
X0 636
X0 693
X0 750
X0 807
X0 863
X0 919
X0 974.5
1
2
3
4
5
6
7
8
S
R
Q
P
O
N
M
L
K
J
DATE: 02/02/93
NAME: P50
VERSION: INK2

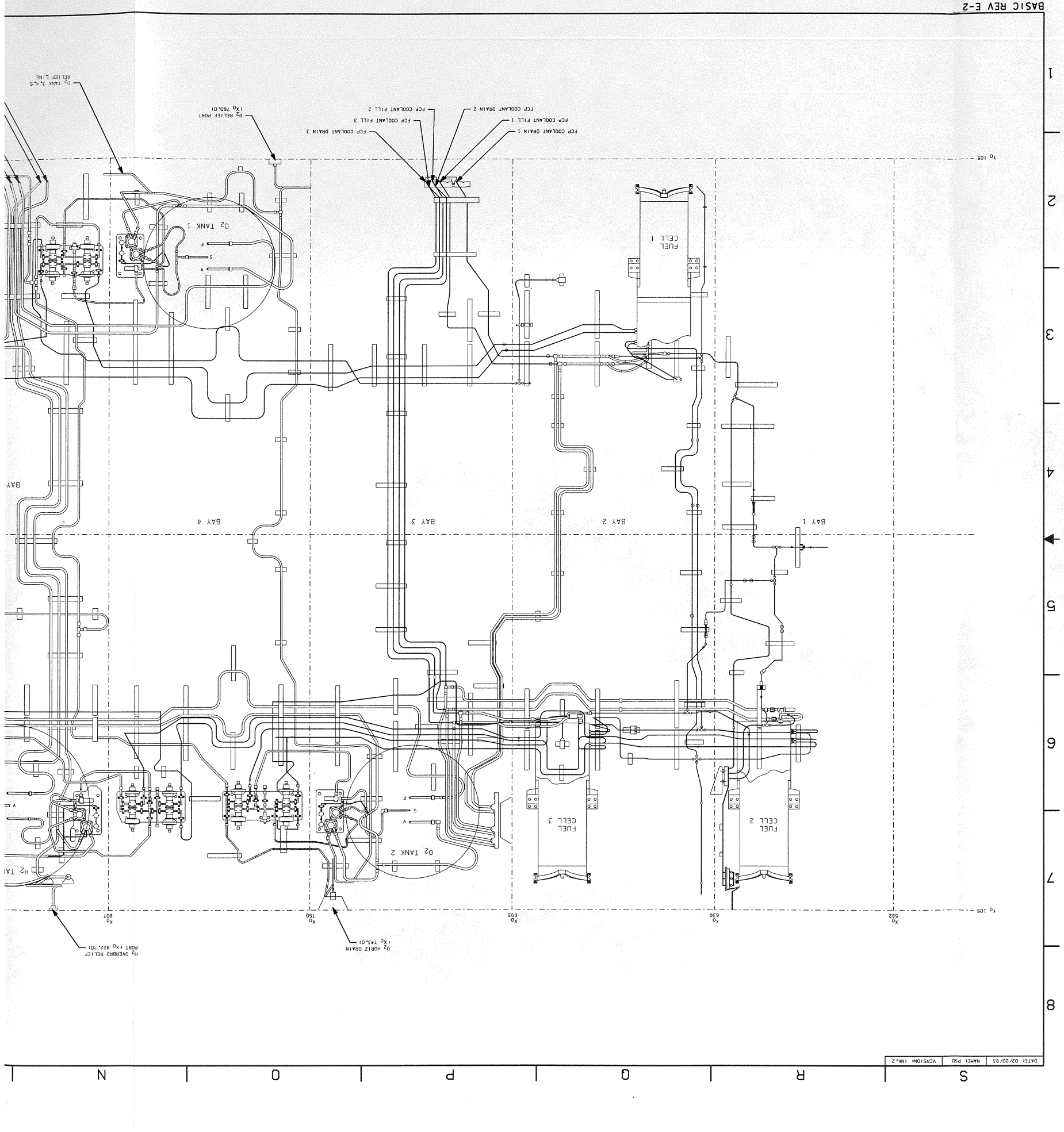

DATE 02/02/93	NAME PSD	VERSION INC.2

FOR DETAILED COMPONENT AND LOGIC INFORMATION REFER TO:

SSSH DWG NO.	SSSH DWG TITLE	VENDOR NAME	VENDOR DWG NO.	VENDOR SHEET NO.	REV	DATE	VENDOR DRAWING TITLE
3.1 (SHEET 1)	FUEL CELL/REACTANT STORAGE OVERVIEW	ROCKWELL	VS70-450212	ALL	C	7/5/84	SCHEMATIC DIAGRAM - CRYO SUBSYSTEM
		ROCKWELL	VS70-450222	ALL	B	10/10/83	SCHEMATIC DIAGRAM - CRYO SUBSYSTEM
		ROCKWELL	VS70-450219	ALL	B01	5/23/89	SCHEMATIC DIAGRAM - CRYO SUBSYSTEM
		NASA/ SHUTTLE OPERATIONS DATA BOOK VOL. I	NSTS-08934 SEC. 4.4.2	1-9	E	8/14/90	POWER REACTANT STORAGE AND DISTRIBUTION
3.1 (SHEET 2)	PALLET REACTANT STORAGE OVERVIEW	R.I	ECN 105-0044	ALL	A4	1/23/90	PRSD MODS FOR THE 28-DAY MISSION EXTENSION KIT ON OV-105
		R.I.	VS70-945102	ALL	G	7/20/90	INTEGRATED SYSTEM SCHEMATIC ORBITER OV-102 EPS
		R.I.	SSV90-7	ALL	—	3/19/90	EXTENDED DURATION ORBITER CRITICAL DESIGN REVIEW (PRELIMINARY DOCUMENT)
3.2 (SHEETS 1-4)	0_2 REACTANT STORAGE	ROCKWELL	VS70-945099	ALL	A11	7/27/90	INTEGRATED SYSTEM SCHEMATIC ELECTRICAL POWER SUBSYSTEM ORBITER VEHICLES - 099, 103 and 104
3.2 (SHEET 5)	O_2 REACTANT STORAGE OV-105	R.I.	VS70-450205	ALL	A	8/28/89	SCHEMATIC DIAGRAM - CRYO SUBSYSTEM OV-105
3.2 (SHEETS 6-7)	PALLET O_2 REACTANT TANKS 6 & 7 (8 & 9)	R.I.	ECN 105-0044	ALL	A4	1/23/90	PRSD MODS FOR THE 28-DAY MISSION EXTENSION KIT ON OV-105
		R.I.	VS70-945102	ALL	G	7/20/90	INTEGRATED SYSTEM SCHEMATIC ORITER OV-102 EPS
		JSC	SCR 90118	ALL	A	8/23/90	EDO SM MODIFICATIONS
3.3 (SHEETS 1-4)	H_2 REACTANT STORAGE	ROCKWELL	VS70-945102	ALL	G07	8/2/90	INTEGRATED SYSTEM SCHEMATIC ORBITER OV-102 EPS
		ROCKWELL	VS70-450212	ALL	C	7/5/84	SCHEMATIC DIAGRAM - CRYO SUBSYSTEM
		ROCKWELL	VS70-450222	ALL	B	10/10/83	SCHEMATIC DIAGRAM - CRYO SUBSYSTEM
		ROCKWELL	VS70-450219	ALL	B01	5/23/89	SCHEMATIC DIAGRAM - CRYO SUBSYSTEM
		ROCKWELL	V070-454929	ALL	D/E01	4/11/90	ELECTRICAL POWER SUBSYSTEM INSTL - R. H. SIDE Xo 693.0 - Xo 919.0
		ROCKWELL	V070-454928	ALL	D/E02	4/11/90	ELECTRICAL POWER SUBSYSTEM L. H. INSTALLATION Xo 693 - Xo 919
		ROCKWELL	V070-454031	ALL	J/K02	7/11/90	ELECTRICAL POWER SUBSYSTEM L. H. INSTALLATION Xo 693 - Xo 919
		ROCKWELL	V070-454041	ALL	J	7/8/88	ELECTRICAL POWER SUBSYSTEM INSTL - R. H. SIDE Xo 693.0 - Xo 919.0
		ROCKWELL	M072-454001	ALL	M	9/12/90	PRSD SYSTEM TANK SET 3 TECH ORDER INSTALLATION MODEL MV0544A (OV-102)
		ROCKWELL	M072-454004	ALL	F	7/7/89	PRSD SYSTEM TANK SET 3 TECH ORDER INSTALLATION MODEL MV0544A (OV-103)
		ROCKWELL	M072-454011	ALL	E/F05	5/4/89	PRSD SYSTEM TANK SET 3 TECH ORDER INSTALLATION MODEL MV0544A (OV-104)
		ROCKWELL	M072-454002	ALL	M	5/22/89	PRSD SYSTEM TANK SET 4 TECH ORDER INSTALLATION MODEL MV0525A (OV-102)
		ROCKWELL	M072-454006	ALL	D	7/25/89	PRSD SYSTEM TANK SET 4 TECH ORDER INSTALLATION MODEL MV0525A (OV-103)
		ROCKWELL	M072-454012	ALL	D/E05	5/4/89	PRSD SYSTEM TANK SET 4 TECH ORDER INSTALLATION MODEL MV0525A (OV-104)
		ROCKWELL	M072-454008	ALL	J	9/10/90	PRSD SYSTEM TANK SET 5 TECH ORDER INSTALLATION MODEL MV0566A (OV-102)

DWG	SIGNATURE	DATE	DWG	SIGNATURE	DATE
3.1-1	ENGR S. HIRSHORN		3.2-7	ENGR R. AL-AYOUBI	
	ENGR Steven Hirshorn	10/29/90		ENGR Rami Al-Ayoubi	10/29/90
3.1-2	ENGR R. AL-AYOUBI		3.3,1-4	ENGR S. HIRSHORN	
	ENGR Rami Al-Ayoubi	10/29/90		ENGR Steven Hirshorn	10/29/90
3.2,1-5	ENGR S. HIRSHORN			APP Paul M Joyce	11/1/90
	ENGR Steven Hirshorn	10/29/90		APP	
3.2-6	ENGR L. MINTER			OMNIPLAN	
	ENGR Larry Minter	10/29/90		LTR E	PCN

NATIONAL AERONAUTICS AND SPACE ADMINISTRATION
LYNDON B. JOHNSON SPACE CENTER HOUSTON, TEXAS

VENDOR DRAWING REFERENCES

SPACE SHUTTLE	TBL NO 3-I	
ALL		
	PAGE 3.I-1	SHEET 1 OF 2

BASIC REV E

FOR DETAILED COMPONENT AND LOGIC INFORMATION REFER TO:

SSSH DWG NO.	SSSH DWG TITLE	VENDOR NAME	VENDOR DWG NO.	VENDOR SHEET NO.	REV	DATE	VENDOR DRAWING TITLE
3.3 (SHEET 5)	H_2 REACTANT STORAGE OV-105	R.I.	VS70-450205	ALL	A	8/28/89	SCHEMATIC DIAGRAM - CRYO SUBSYSTEM OV-105
3.3 (SHEETS 6-7)	PALLET H_2 REACTANT TANKS 6 & 7 (8 & 9)	R.I.	ECN 105-0044	ALL	A4	1/23/90	PRSD MODS FOR THE 28-DAY MISSION EXTENSION KIT ON OV-105
		R.I.	VS70-945102	ALL	G	7/20/90	INTEGRATED SYSTEM SCHEMATIC ORBITER OV-102 EPS
		JSC	SCR 90118	ALL	A	8/23/90	EDO SM MODIFICATIONS
3.4 (SHEET 1)	FUEL CELL	R.I.	VS70-945102	27	F/G07	8/2/90	FUEL CELL 1 REAR VALVES, FC GAS CONTROL, AND LIVE HEATERS
			VS70-945102	28	F/G07	8/2/90	FC 1 START-UP LOGIC AND FC HEATERS
			VS70-945102	29	F/G07	8/2/90	FC 1 INSTRUMENTATION
			VS70-945102	36	F/G07	8/2/90	FC GAS/H_20 DISCHARGE SYSTEM AND HEATER CONTROL
			VS70-450119	1 of 7	B	6/14/89	FC CONTROL SUBSYSTEM
			VS70-450119	2	B	6/14/89	FC PURGE VALVES and HTRS
		R.I.	VS70-723319	6,7,16	C	7/11/88	TABULATED CONNECTOR INTERFACE
		R.I.	VS70-450205	2	B	4/3/91	SCHEMATIC DIAGRAM - CRYO SUBSYSTEM OV-105
3.4 SHEET 2	FUEL CELL TO PURGE AND CELL PERFORMANCE MONITOR	AEROSPACE AVIONICS INC.	501054	—	C	11/17/82	CELL PERFORMANCE MONITOR SCHEMATIC ANALOG SIGNAL-CHANNEL
		AEROSPACE AVIONICS INC.	50156	—	C	11/17/82	CELL PERFORMANCE MONITOR POWER SUPPLY SCHEMATIC
		NASA	SS-P-0002-580G	SECTION 6.9	G	10/1/86	SPACE SHUTTLE PROGRAM ORBITER PROJECT COMPUTER PROGRAM DEVELOPMENT SPECIFICATION (CPDS)
		NASA/IBM		3.2.1.18		4/2/82	SPACE SHUTTLE PROGRAM ORBITER AVIONICS SOFTWARE OPERATIONAL (OPS) DETAILED DESIGN SPECIFICATION (DDS)
3.5	EDO PALLET	R.I.	SSV90-7	ALL	-	3/19/90	EXTENDED DURATION ORBITER CRITICAL DESIGN REVIEW (PRELIMINARY DOCUMENT)
		R.I.	V458-454002	1	-	7/1/90	INSTALLATION, EDO-PALLET PRSD SUB-TIER
3.6B	EDO CRYO PALLET PLUMBING	R.I.	VL70-458800	1 of 5	-	11/91	FUEL CELL/POWER REACTANT STORAGE & DISTRIBUTION SYSTEM SCHEMATIC OV-102 (STS-50) VERSION (PRELIMINARY DOCUMENT)

DWG	SIGNATURE	DATE	DWG	SIGNATURE	DATE
3.3-5	ENGR S. HIRSHORN		3.5	ENGR L. FOX	
	ENGR [signature]	2/17/93		ENGR [signature]	2-17-93
3.3-6	ENGR L. MINTER		3.6B	ENGR L. FOX	
	ENGR [signature]	2/17/93		ENGR [signature]	2-17-93
3.3-7	ENGR R. ALTYOUB			APP [signature]	2-18-93
	ENGR [signature]	2/18/93		APP	
3.4-1,2	ENGR B. PAWLIK			OMNIPLAN	
	ENGR [signature]	2/19/93		LTR E PCN 2	

NATIONAL AERONAUTICS AND SPACE ADMINISTRATION
LYNDON B. JOHNSON SPACE CENTER HOUSTON, TEXAS

VENDOR DRAWING REFERENCES

SPACE SHUTTLE ALL | TBL NO 3-I | PAGE 3.1-2 | SHEET 2 OF 2

BASIC REV E-2

DATE: 10/12/90	NAME: SEV	VERSION: BPT: 8
DATE: 10/23/90	NAME: BJT	VERSION: INK: 6
DATE: 11/01/90	NAME: SEV	VERSION: INK: 7

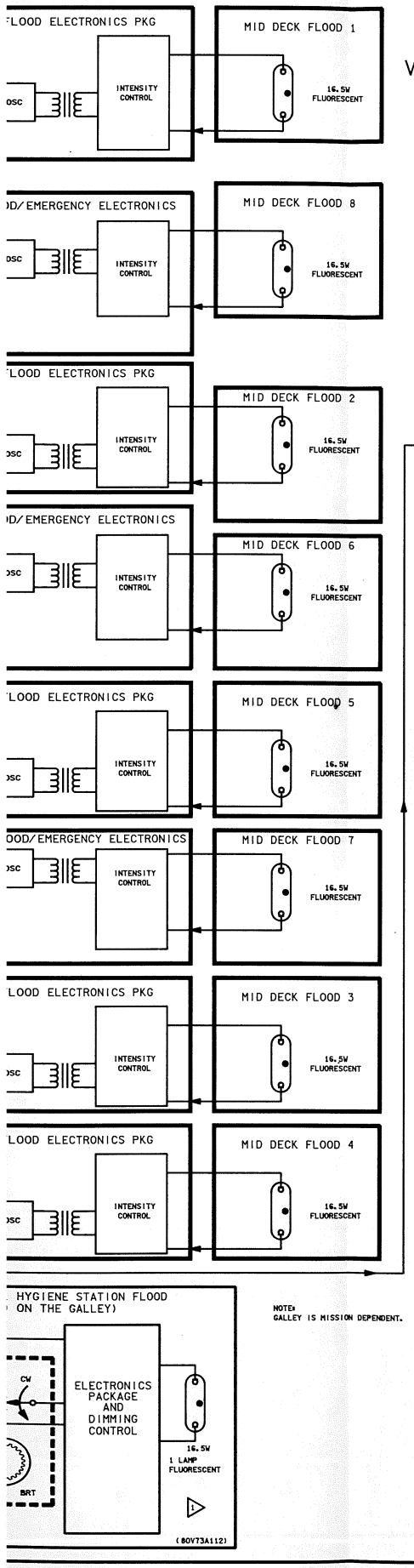

NOTE:
GALLEY IS MISSION DEPENDENT.

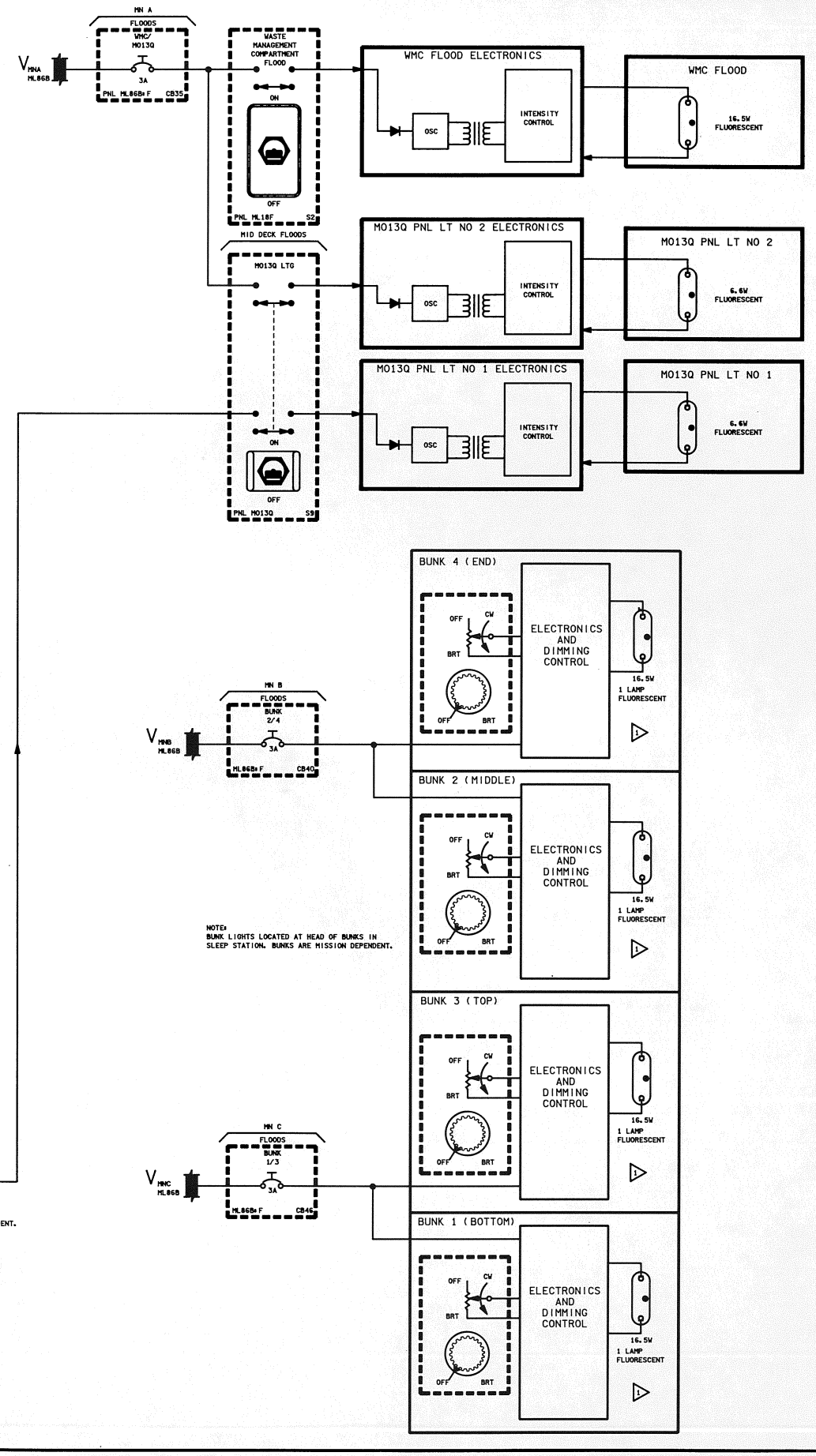

NOTE:
BUNK LIGHTS LOCATED AT HEAD OF BUNKS IN SLEEP STATION. BUNKS ARE MISSION DEPENDENT.

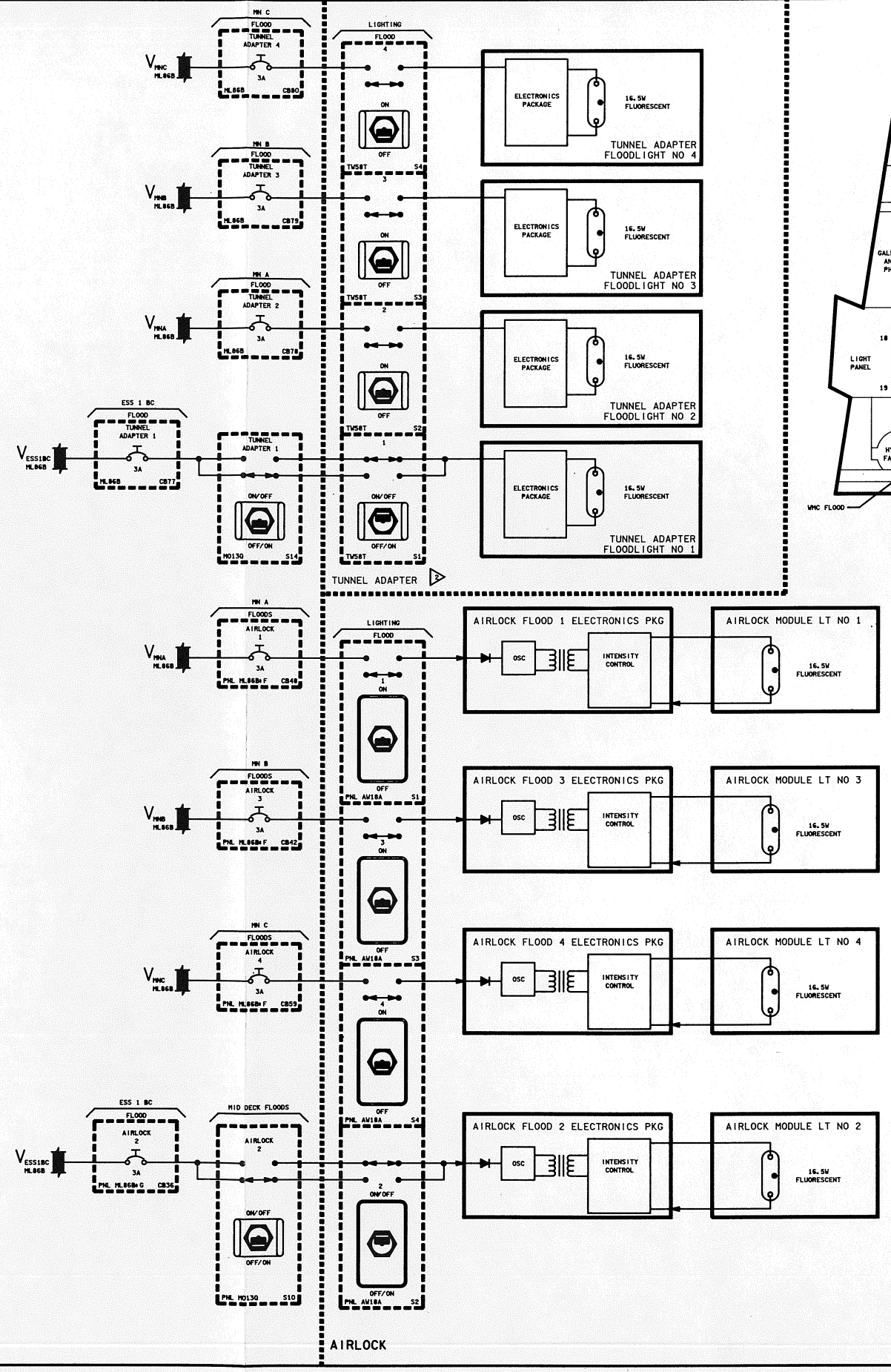

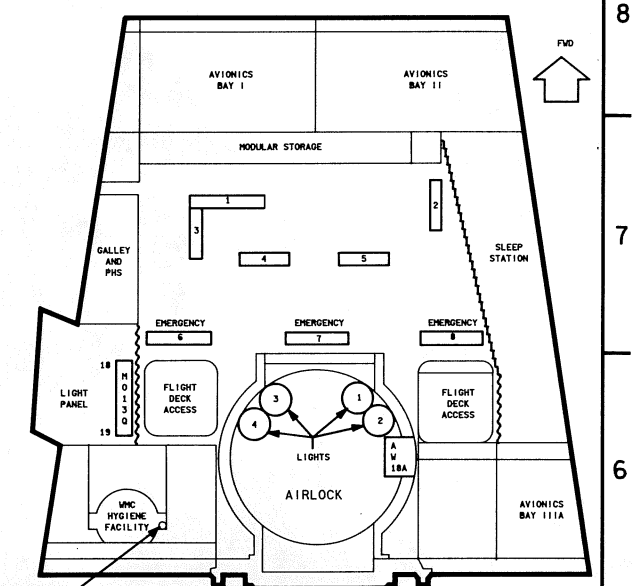

MID DECK AND AIRLOCK STATIONS

3. SEE TABLE 4-II FOR DRAWING REFERENCES

SPACELAB FLIGHTS ONLY. SEE SPACELAB SYSTEM HANDBOOK DWG 2.8 FOR DETAILS OF SPACELAB TUNNEL LIGHTING.

NOTES: CONTROLS MOUNTED ON LIGHT FIXTURE

1 INT LTG

SIGNATURE		DATE	NATIONAL AERONAUTICS AND SPACE ADMINISTRATION LYNDON B. JOHNSON SPACE CENTER HOUSTON, TEXAS
DSGN	MELVIN J JAMES	3-15-79	
DR	MELVIN J JAMES	4-03-79	
ENGR	R. FLOYD		INTERIOR FLOOD LIGHTING
ENGR		10/29/90	
APP		10/29/90	
APP			SPACE SHUTTLE / DWG NO 4.1
OPNI PLAN	S.K. Kimbell	11-7-90	ALL
LTR E	PCN		126.5 X 34 / PAGE / SHEET 1 OF 1

BASIC REV E

S R Q P O N M L K J I

ESS 1BC
FLOOD LEFT GLRSHLD
3A
PNL R15+F CB59
LIGHTING LEFT GLARESHIELD FLOOD
BRIGHT
DIM
OFF
PNL O6 S1
GLARESHIELD LEFT ELECTRONICS PKG
OSC
INTENSITY CONTROL
FLUORESCENT
16.5W F2A2
16.5W F3A1
LIGHTING LEFT GLARESHIELD FLOOD
DIM BRT
PNL O6 R1

ESS 2CA
FLOOD RIGHT GLRSHLD
3A
PNL R15+F CB61
LIGHTING RIGHT GLARESHIELD FLOOD
BRIGHT
DIM
OFF
PNL O8 S2
GLARESHIELD RIGHT ELECTRONICS PKG
OSC
INTENSITY CONTROL
FLUORESCENT
16.5W F4A2
16.5W F3A2
LIGHTING RIGHT GLARESHIELD FLOOD
DIM BRT
PNL O8 R1

MN B
OS FLOOD
3A
PNL R15+E CB54
ORBIT STATION LIGHTING FLOOD
ON
OFF
PNL A6A1 S32
OS FLOOD ELECTRONICS PKG
OSC
INTENSITY CONTROL
19W FLUORESCENT
ORBIT LIGHTING STATION FLOOD
DIM BRT
PNL A6A1 R1

ON-ORBIT STATION FLOODLIGHT
PS FLOODLIGHT
AFT STATIONS

SEAT/CENTER CONSOLE FLOODLIGHTS
PLT RIGHT SIDE CONSOLE FLOODLIGHTS
CDR LEFT SIDE CONSOLE FLOODLIGHTS
LEFT AND RIGHT GLARESHIELD FLOODLIGHTS
FORWARD STATIONS

MN C
MS FLOOD
3A
PNL R15+E CB58
MS LIGHTING FLOOD
ON
OFF
PNL R10A2 S12
MS FLOOD ELECTRONICS PKG
OSC
INTENSITY CONTROL
MS FLOOD
33W FLUORESCENT
MS LIGHTING FLOOD
DIM BRT
PNL R10A2 R3

MN A
FLOODS MIDDECK 1/8
3A
PNL ML868+F CB34
MID DECK FLOODS
1 ON
OFF
PNL MO13Q S1
MID DECK 1 FLOOD ELECTRONICS PKG
OSC
INTENSITY CONTROL
MID DECK FLOOD 1
16.5W FLUORESCENT

MN B
FLOODS MIDDECK 2/6
3A
PNL ML868+F CB39
2 ON
OFF
PNL MO13Q S2
MID DECK 8 FLOOD/EMERGENCY ELECTRONICS PKG
OSC
INTENSITY CONTROL
MID DECK FLOOD 8
16.5W FLUORESCENT

MID DECK 2 FLOOD ELECTRONICS PKG
OSC
INTENSITY CONTROL
MID DECK FLOOD 2
16.5W FLUORESCENT

MID DECK 6 FLOOD/EMERGENCY ELECTRONICS PKG
OSC
INTENSITY CONTROL
MID DECK FLOOD 6
16.5W FLUORESCENT

MN C
FLOODS MIDDECK 5/7
3A
PNL ML868+F CB44
6 ON
OFF
PNL MO13Q S6
MID DECK 5 FLOOD ELECTRONICS PKG
OSC
INTENSITY CONTROL
MID DECK FLOOD 5
16.5W FLUORESCENT

5 ON
OFF
PNL MO13Q S5
MID DECK 7 FLOOD/EMERGENCY ELECTRONICS PKG
OSC
INTENSITY CONTROL
MID DECK FLOOD 7
16.5W FLUORESCENT

7 ON
OFF
PNL MO13Q S7
MID DECK 3 FLOOD ELECTRONICS PKG
OSC
INTENSITY CONTROL
MID DECK FLOOD 3
16.5W FLUORESCENT

3 ON
OFF
PNL MO13Q S3
MID DECK 4 FLOOD ELECTRONICS PKG
OSC
INTENSITY CONTROL
MID DECK FLOOD 4
16.5W FLUORESCENT

4 ON
OFF
PNL MO13Q S4

MN A
FLOODS MNA/MNC MO13Q
3A
PNL ML868+F

MN C
FLOODS MIDDECK 3/4 MO13Q
3A
PNL ML868+F CB45

EMERGENCY LIGHTING
ON/OFF
OFF/ON
PNL C3A5 S15
EMERGENCY LIGHTING
ON/OFF
OFF/ON
PNL ML10F S1
1.2K 2W
RPC 7.5A
C
P

MN B
FLOODS PHS
3A
PNL ML868+F CB41
PERSONAL HYGIENE STATION FLOOD (LOCATED ON THE GALLEY)
OFF CW
BRT
OFF BRT
ELECTRONICS PACKAGE AND DIMMING CONTROL
16.5W 1 LAMP FLUORESCENT
(80V73A112)

NOTE:
GALLEY IS MISSION DEPENDENT.

FLIGHT DECK MID DECK

DATE: 11/01/90 | NAME: SEV | VERSION: INK 7

W V U T S R Q P O N

8 7 6 5 4 3 2 1

MN A
FLOOD LEFT CNSL
3A
PNL O14 C CB11
V_{MNA} 014

OVERHEAD LEFT ELECTRONICS PKG PANEL
OSC
INTENSITY CONTROL
16.5W FLUORESCENT
LIGHT ASSY
OH CDR LEFT CNSL FLOOD
OFF BRT OFF BRT

MN B
FLOOD LEFT CTR
3A
PNL O15 C CB11
V_{MNB} 015

LEFT SEAT/CENTER CONSOLE FLOOD
LEFT SEAT/ CTR CNSL FLOOD
DIMMING CONTROL ELECTRONICS
SEAT
CTR CNSL
PNL O6A1 S6
DIM BRT BRT PNL O6A1 R7
CTR CNSL 22V RTN
LEFT SEAT 22V

MN C
FLOOD RIGHT CTR
3A
PNL O16 C CB10
V_{MNC} 016

RIGHT SEAT/CENTER CONSOLE FLOOD
RIGHT SEAT/ CTR CNSL FLOOD
DIMMING CONTROL ELECTRONICS
SEAT
CTR CNSL
PNL O8A1 S1
DIM BRT BRT PNL O8A1 R6
CTR CNSL 22V RTN
RIGHT SEAT 22V

MN B
FLOOD RIGHT CNSL
3A
PNL O15 C CB10
V_{MNB} 015

OVERHEAD RIGHT ELECTRONICS PACKAGE PANEL
OSC
INTENSITY CONTROL
16.5W FLUORESCENT
LIGHT ASSY
OH PLT RIGHT CNSL FLOOD
OFF BRT OFF BRT

MN A
PS FLOOD
3A
PNL R15 E CB50
V_{MNA} R15

PS FLOOD
ON
OFF
PNL L9A2 S11

PS FLOOD ELECTRONICS PKG
OSC
INTENSITY CONTROL
PS FLOOD
33W FLUORESCENT
PS FLOOD
DIM BRT BRT PNL L9A2 R3

ESS 1BC
FLOOD LEFT GLRSHLD
3A
PNL R15 F CB55
V_{ESS1BC} 013&R15

LIGHTING
LEFT GLARESHIELD FLOOD
BRIGHT
VAR
OFF
PNL O6 S1

V_{ESS3AB} RTN
V_{ESS1BC} RTN

GLARESHIELD LEFT ELECTRONICS PKG
OSC
INTENSITY CONTROL
FLUORESCENT
16.5W F2A2
16.5W F3A1
LIGHTING
LEFT GLARESHIELD FLOOD
DIM BRT BRT PNL O6 R1

ESS 2CA
FLOOD RIGHT GLRSHLD
3A
PNL R15 F CB61
V_{ESS2CA} 013&R15

LIGHTING
RIGHT GLARESHIELD FLOOD
BRIGHT
VAR
OFF
PNL O8 S3

V_{ESS3AB} RTN
V_{ESS2CA} RTN

GLARESHIELD RIGHT ELECTRONICS PKG
OSC
INTENSITY CONTROL
FLUORESCENT
16.5W F4A2
16.5W F3A2
LIGHTING
RIGHT GLARESHIELD FLOOD
DIM BRT BRT PNL O8 R1

MN B
OS FLOOD
3A
PNL R15 E CB54
V_{MNB} R15

ORBIT STATION LIGHTING
FLOOD
ON
OFF
PNL A6A1 S32

V_{ESS3AB} RTN
V_{MNB} RTN

OS FLOOD ELECTRONICS PKG
OSC
INTENSITY CONTROL
19W FLUORESCENT
ORBIT LIGHTING STATION
FLOOD
DIM BRT BRT PNL A6A1 R1

ON-ORBIT STATION FLOODLIGHT
MS FLOODLIGHT
PS FLOODLIGHT

AFT STATIONS

SEAT/CENTER CONSOLE FLOODLIGHTS
PLT RIGHT SIDE CONSOLE FLOODLIGHTS
CDR LEFT SIDE CONSOLE FLOODLIGHTS
LEFT AND RIGHT GLARESHIELD FLOODLIGHTS

FORWARD STATIONS

MN C
MS FLOOD
3A
PNL R15 E CB54
V_{MNC} R15

MS LIGHTING
FLOOD
ON
OFF
PNL R10A2 S12

MS FLOOD ELECTRONICS PKG
OSC
INTENSITY CONTROL
MS FLOOD
33W FLUORESCENT
MS LIGHTING
FLOOD
DIM BRT BRT PNL R10A2 R3

V_{ESS3AB} FD
1.2K 2W
EMERGENCY LIGHTING
ON/OFF
OFF/ON
PNL C3A5 S15
EMERGEN LIGHTIN
ON/OFF
OFF/ON
PNL ML18F

FLIGHT DECK | MID DECK

BASIC REV E

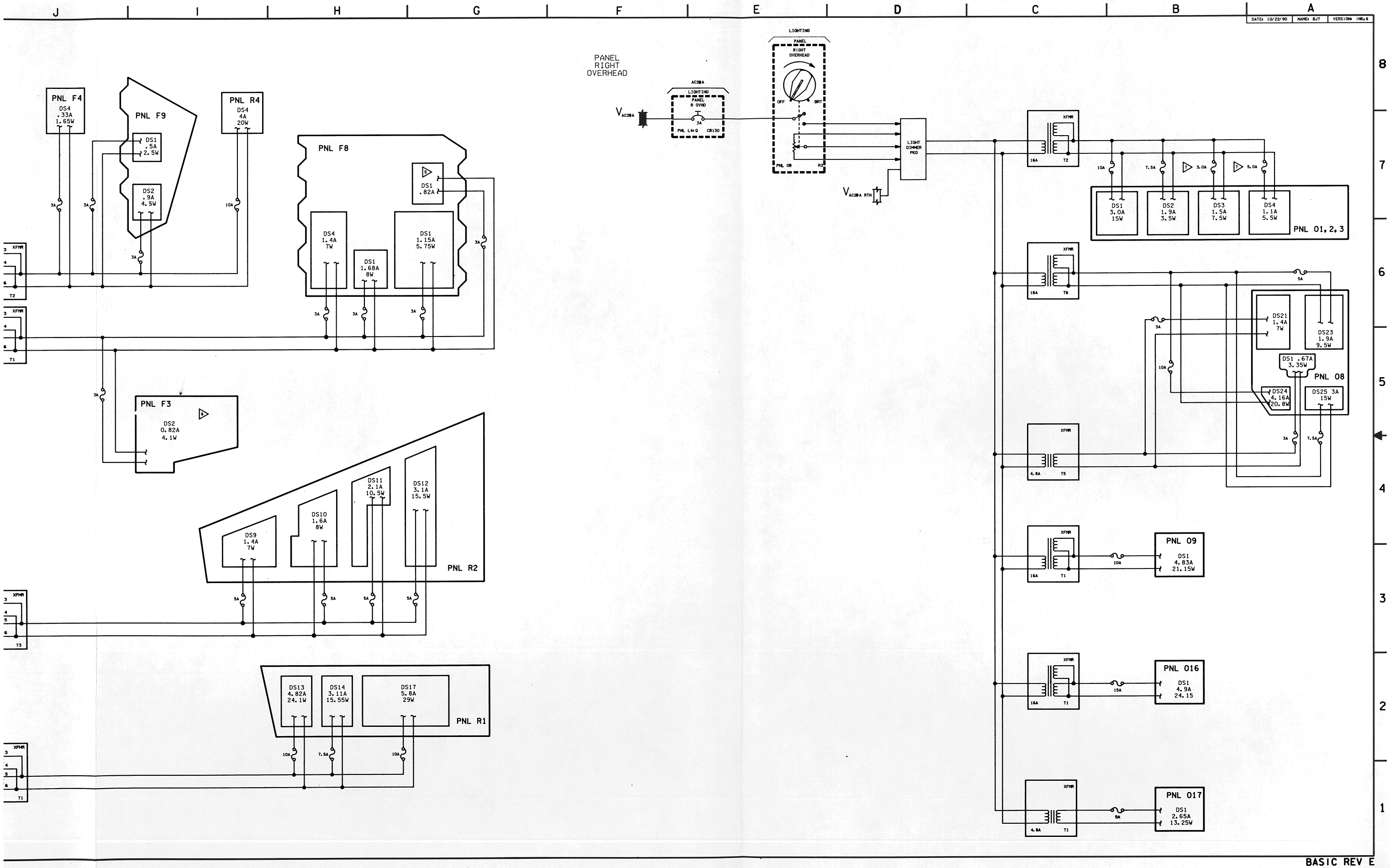

PANEL RIGHT OVERHEAD
PNL F4
DS4 .33A 1.65W
PNL F9
DS1 .5A 2.5W
DS2 .9A 4.5W
PNL R4
DS4 4A 20W
PNL F8
DS1 .82A
DS4 1.4A 7W
DS1 1.68A 8W
DS1 1.15A 5.75W
PNL F3
DS2 0.82A 4.1W
DS9 1.4A 7W
DS10 1.6A 8W
DS11 2.1A 10.5W
DS12 3.1A 15.5W
PNL R2
DS13 4.82A 24.1W
DS14 3.11A 15.55W
DS17 5.8A 29W
PNL R1
LIGHTING
PANEL RIGHT OVERHEAD
OFF
BRT
LIGHT DIMMER PKG
DS1 3.0A 15W
DS2 1.9A 3.5W
DS3 1.5A 7.5W
DS4 1.1A 5.5W
PNL 01, 2, 3
DS21 1.4A 7W
DS23 1.9A 9.5W
DS1 .67A 3.35W
PNL 08
DS24 4.16A 20.8W
DS25 3A 15W
PNL 09
DS1 4.83A 21.15W
PNL 016
DS1 4.9A 24.15
PNL 017
DS1 2.65A 13.25W

BASIC REV E

S R Q P O N M L K J I

PANEL
LEFT/CENTER

PANEL
RIGHT

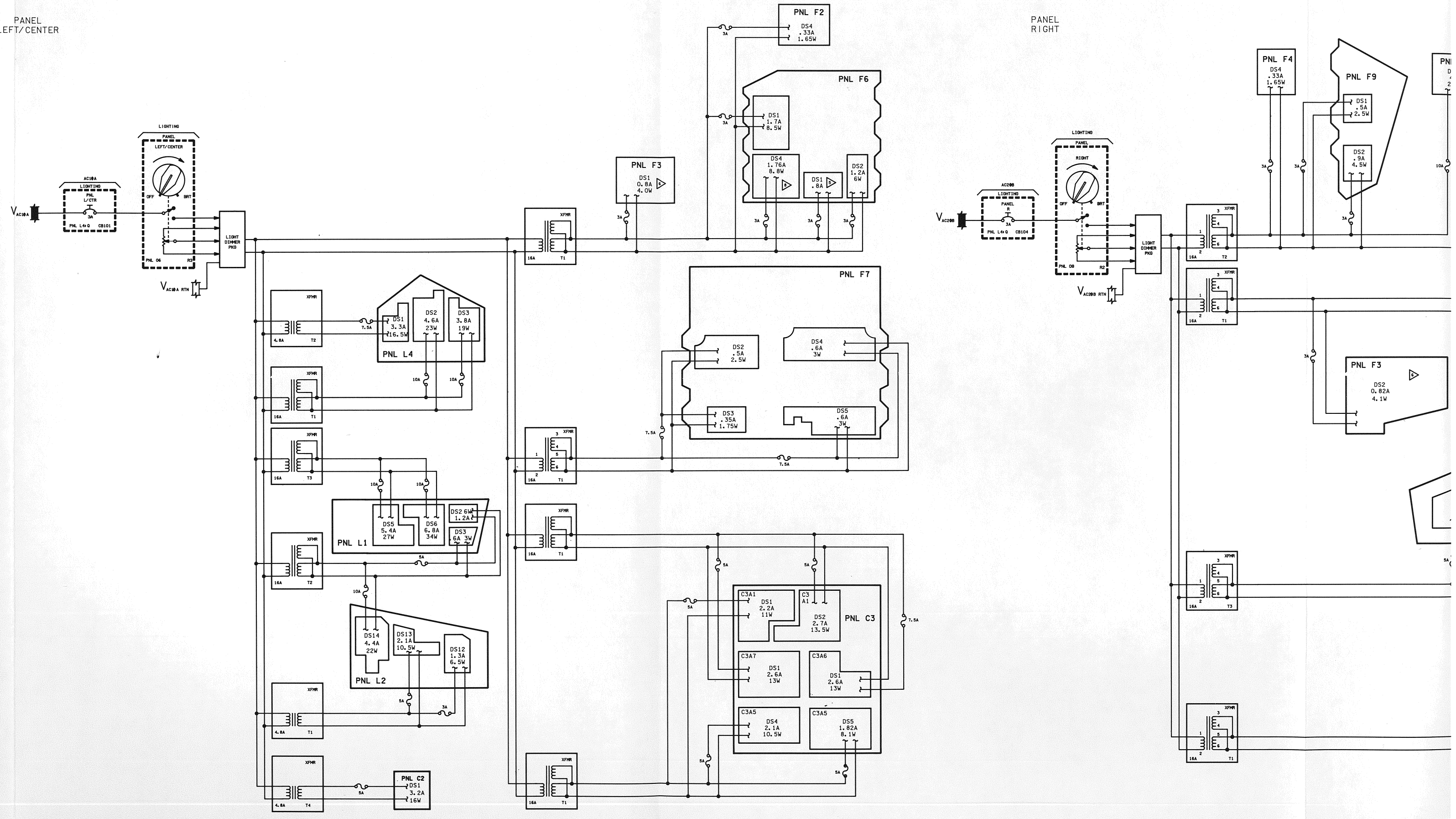

DATE: 8/11/87	NAME: MDU	VERSION: INK: 5
DATE: 10/12/90	NAME: SEW	VERSION: BPT: 1
DATE: 10/22/90	NAME: BJT	VERSION: INK: 6

W V U T S R Q P O N M

8 7 6 5 4 3 2 1

LIGHTING PANEL LEFT OVERHEAD

AC10B LIGHTING PNL L OVHD 3A PNL L4 Q CB102

V_{AC10B}

PANEL LEFT OVERHEAD

LIGHT DIMMER PKG

PNL OB R4

$V_{AC10B\ RTN}$

XFMR 16A T1 → 10A → PNL 05: DS1 4.3A 21.5W

XFMR 16A T6 → 5A, 7.5A

XFMR 16A T5 → 3A, 5A, 10A

PNL 06: DS13 2.311A 11.6W; DS1 33W 67A; DS15 2.1A 10.5W; DS16 3.3A 16.5W; DS17 3.8A 19W

XFMR 16A T1 → 5A, 10A, 10A → PNL 07: DS27 2.5A 12.5W; DS28 4.1A 20.5W; DS29 4.9A 24.5W

XFMR 16A T1 → 7.5A → PNL 013: DS1 2.4A 12W

XFMR 16A T1 → 15A → PNL 014: DS1 4.2A 21W

XFMR 16A T1 → 3A, 10A, 15A → PNL 015 ▷: DS1 1.3A; DS2 4.6A

PNL 015 ▷: DS1 6.36A 31.3W

PANEL LEFT/CENTER

LIGHTING PANEL LEFT/CENTER

AC10A LIGHTING PNL L/CTR 3A PNL L4Q CB101

V_{AC10A}

OFF BRT

LIGHT DIMMER PKG

PNL 06 R3

$V_{AC10A\ RTN}$

XFMR 16A T1 → PNL F3: DS1 0.8A 4.0W

XFMR 4.8A T2 → 7.5A → PNL L4: DS1 3.3A 16.5W; DS2 4.6A 23W; DS3 3.8A 19W

XFMR 16A T3 → 10A, 10A → PNL L1: DS5 5.4A 27W; DS6 6.8A 34W; DS2 6W 1.2A; DS3 6A 3W

XFMR 16A T2 → 5A → PNL L2: DS14 4.4A 22W; DS13 2.1A 10.5W; DS12 1.3A 6.5W

XFMR 4.8A T1 → 5A → PNL C2 ▷: DS1 3.2A 16W

XFMR 4.8A T4

PNL F2: DS4 .33A 1.65W

PNL: DS1 1.7A 8.5W; DS4 1.76A 8.8W; DS1 .8A

PNL: DS2 .5A 2.5W; DS3 .35A 1.75W; DS4 .6A 3W; DS5 .6A 3W

XFMR 16A T1 → 7.5A

XFMR 16A T1 → 5A

PNL: C3A1 DS1 2.2A 11W; C3 A1; DS2 2.7A 13.5W; C3A7 DS1 2.6A 13W; C3A6 DS1 2.6A 13W; C3A5 DS4 2.1A 10.5W; DS5 1.82 8.1

9. SEE TABLE 4-11 FOR DWG REFERENCES

8. DWG CONTAINS THE FOLLOWING PANELS:

PANELS			
06	L1	C2	01
06	L2	C3	02
07	L4	F3	03
013	F2	F4	08
014	F3	F8	09
015	F6	F9	016
	F7	R1	017
		R2	
		R4	

▷ MAY BE REPLACED WITH 7.5A FUSES

▷ NOT ON OV102

▷ OV102 ONLY

4. ALL LAMP ASSYS USE INCANDESCENT BULBS. THE TYPE AND NUMBER OF BULBS VARY PER METER OR EDGE PANEL ASSEMBLY. POWER LEVELS SHOWN ARE FOR TOTAL LAMP ASSEMBLY AT FULL BRIGHT (5VAC). TYPICAL LAMP CIRCUITRY IS SHOWN BELOW

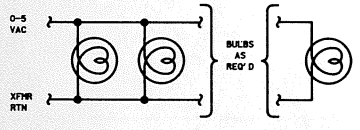

3. ALL TRANFORMERS SHOWN ARE: INPUT 0-115 VAC
OUTPUT 0-5 VAC

2. EACH EDGE PANEL LIGHTING ASSEMBLY, LABELED DS1, DS2, DS3..... IS ATTACHED BEHIND AND BECOMES AN INTEGRAL PART OF EACH LIGHTED SUBPANEL. LIGHT EMMITED BY THE BULBS IS TRANSMITTED THROUGH SMALL HOLES INTO THE TRANSLUCENT COATING ON THE FRONT OF THE PANEL. THE LIGHT PROPOGATES THROUGHOUT THE COATING AND IS REFLECTED BY THE WHITE PAINT IN THE ETCHED-ON NOMENCLATURE

NOTES: 1. TO AID IN IDENTIFYING PORTION OF PANEL LIGHTED BY EACH ASSEMBLY, REFER TO THE D&C FIGURES 19-1, 19-2, AND 19-3

2 INS LTG 1

NATIONAL AERONAUTICS AND SPACE ADMINISTRATION LYNDON B. JOHNSON SPACE CENTER HOUSTON, TEXAS	SIGNATURE	DATE
	DSGN	
INSTRUMENT/NUMERIC/ EDGE PANEL LIGHTING	DR	
	ENGR R. FLOYD	
	ENGR	9/29/90
DWG NO 4.2	APP	10/29/90
SPACE SHUTTLE	APP	
ALL	OMNIPLAN S.K. Kimball	11-7-90
SHEET 1 OF 2 PAGE	LTR E PCN	
126.5 X 34		

BASIC REV E

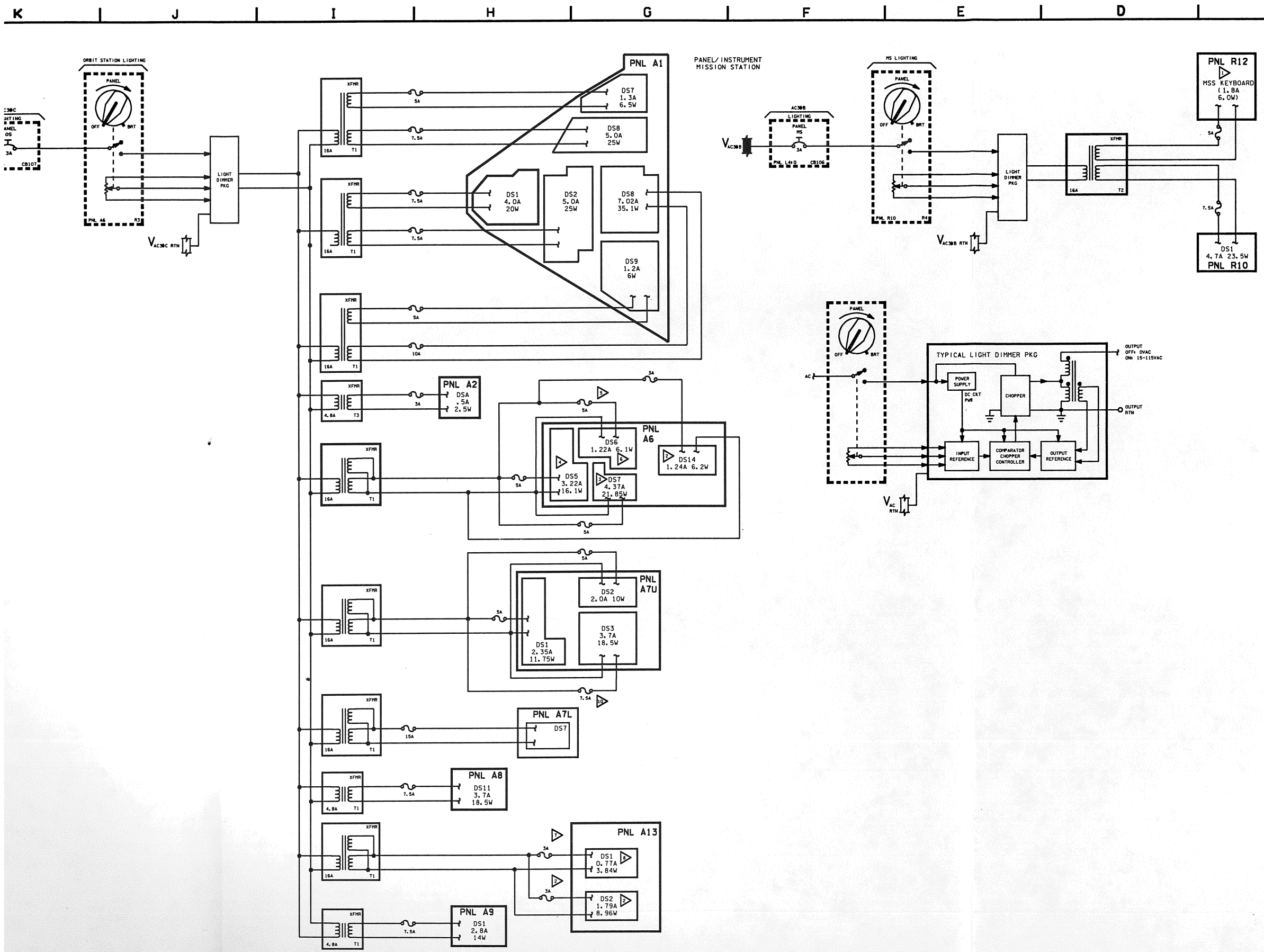

DATE: 07/11/94	NAME: VSH	VERSION: BPT;2
DATE: 07/29/94	NAME: JMB	VERSION: INK;6
DATE: 08/05/94	NAME: SEW	VERSION: INK;7

12. SEE TABLE 4-11 FOR DWG REFERENCES

11. DWG CONTAINS THE FOLLOWING PANELS:

O1	A1	R10
O2	A2	R12
O3	A4	
C2	A6	
F6	A7	
F7	A8	
F8	A9	
F9	A13	

10. 2.5A ON OV102
9. DELETED
8. 3.61A ON OV102
7. 10A ON OV102
6. 4.5A ON OV102
5. 7.5A ON OV102
4. 1.7A ON OV102
3. 2.1A ON OV102
2. NOT ON OV102

NOTES: 1. OV102 ONLY

2 INS LTG 2

SIGNATURE	DATE	NATIONAL AERONAUTICS AND SPACE ADMINISTRATION LYNDON B. JOHNSON SPACE CENTER HOUSTON, TEXAS
DSGN DOUG SNELL	6/13/78	
DR		INSTRUMENT/NUMERIC/ EDGE PANEL LIGHTING
ENGR B. ARMSTRONG		
ENGR [signature]	8/12/94	
APP [signature]	8/19/94	
APP		SPACE SHUTTLE — DWG NO 4.2
CADS S.K. Kimbrell	9-22-94	ALL
LTR E — PCN 4		126.5 X 34 — PAGE — SHEET 2 OF 2

BASIC REV E-4

INSTRUMENT ORBIT STATION

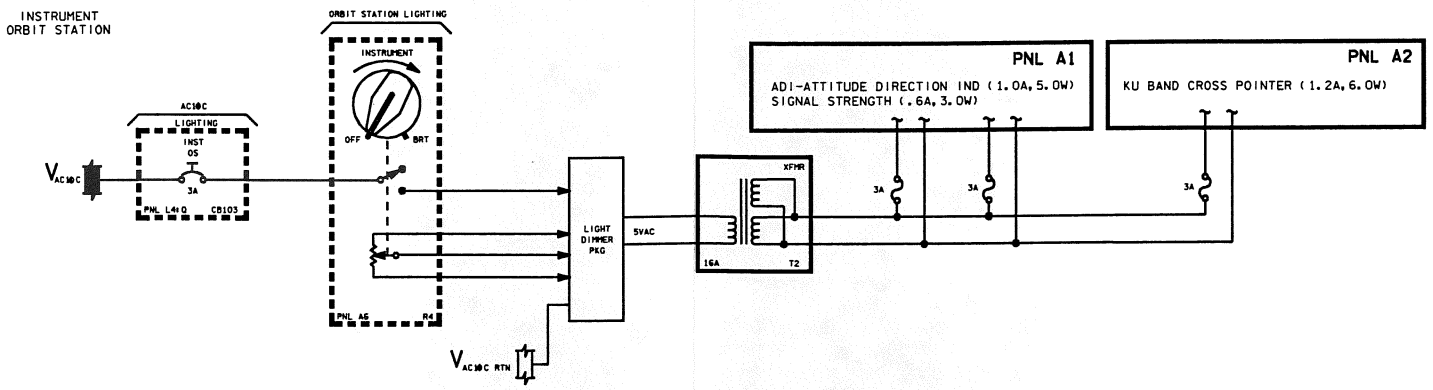

PANEL ORBIT STATION

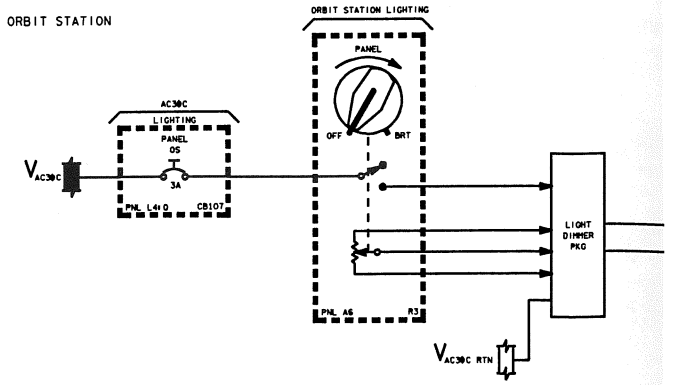

NUMERIC ORBIT STATION

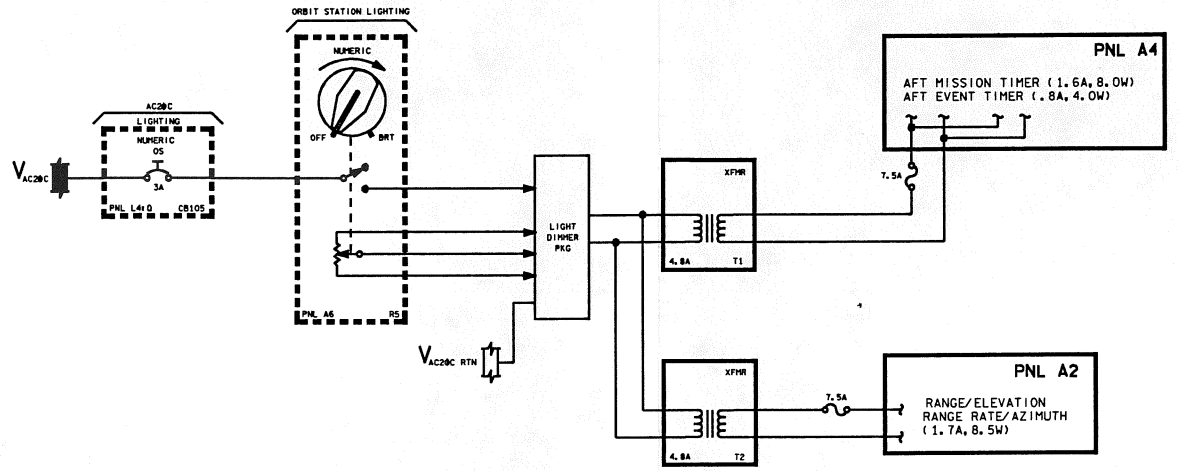

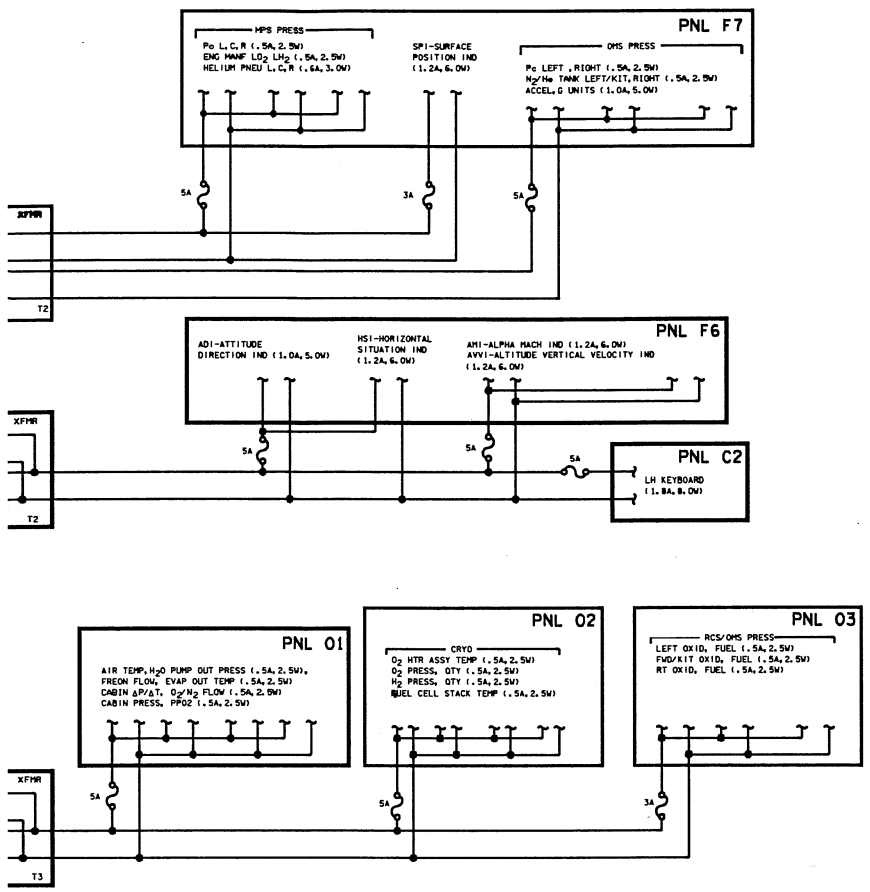

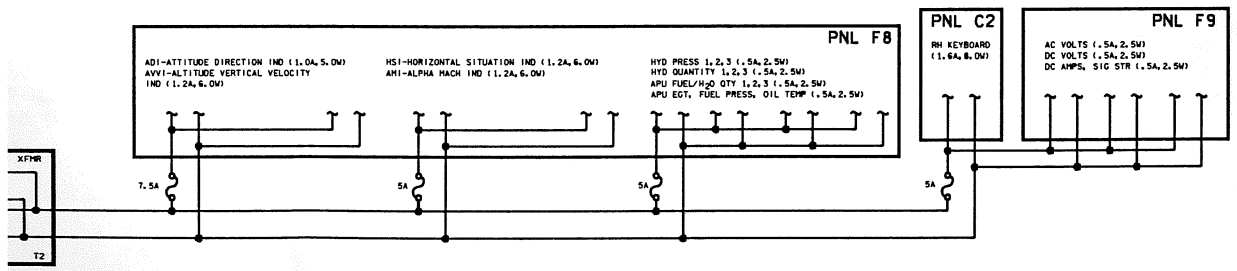

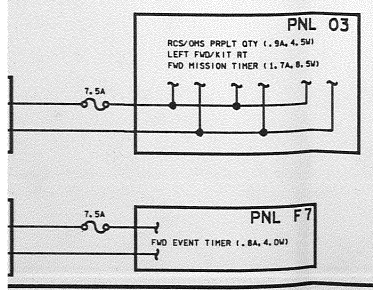

W V U T S R Q P O N

8 7 6 5 4 3 2 1

INSTRUMENT LEFT/CENTER

AC30B LIGHTING INST L/CTR 3A PNL L4 R CB125

V_{AC30B}

LIGHTING INSTRUMENT LEFT/CENTER OFF BRT PNL 06 R5

$V_{AC30B\ RTN}$

LIGHT DIMMER PKG

XFMR 16A T2

PNL F7
- MPS PRESS: Po L,C,R (.5A, 2.5W); ENG MANF LO_2 LH_2 (.5A, 2.5W); HELIUM PNEU L,C,R (.5A, 3.0W)
- SPI-SURFACE POSITION IND (1.2A, 6.0W)
- OMS PRESS: Pc LEFT, RIGHT (.5A, 2.5W); N_2/He TANK LEFT/KIT, RIGHT (.5A, 2.5W); ACCEL, G UNITS (1.0A, 5.0W)

5A 3A 5A

XFMR 16A T2

PNL F6
- ADI-ATTITUDE DIRECTION IND (1.0A, 5.0W)
- HSI-HORIZONTAL SITUATION IND (1.2A, 6.0W)
- AMI-ALPHA MACH IND (1.2A, 6.0W); AVVI-ALTITUDE VERTICAL VELOCITY IND (1.2A, 6.0W)

5A 5A 5A

PNL C2: LH KEYBOARD (1.8A, 8.0W)

INSTRUMENT OVERHEAD

AC30B LIGHTING INST OVHD 3A PNL L4 R CB124

V_{AC30B}

LIGHTING INSTRUMENT OVERHEAD OFF BRT PNL 06 R6

$V_{AC30B\ RTN}$

LIGHT DIMMER PKG

XFMR 16A T3

PNL 01: AIR TEMP, H_2O PUMP OUT PRESS (.5A, 2.5W), FREON FLOW, EVAP OUT TEMP (.5A, 2.5W); CABIN ΔP/ST, O_2/H_2 FLOW (.5A, 2.5W); CABIN PRESS, PPO2 T, 5A, 2.5W)

PNL 02: CRYO: O_2 HTR ASSY TEMP (.5A, 2.5W); O_2 PRESS, QTY (.5A, 2.5W); H_2 PRESS, QTY (.5A, 2.5W); FUEL CELL STACK TEMP (.5A, 2.5W)

PNL 03: RCS/OMS PRESS: LEFT OXID, FUEL (.5A, 2.5W); FWD/KIT OXID, FUEL (.5A, 2.5W); RT OXID, FUEL (.5A, 2.5W)

5A 5A 3A

INSTRUMENT RIGHT

AC30A LIGHTING INST R 3A PNL L4 R CB126

V_{AC30A}

LIGHTING PANEL RIGHT INSTRUMENT OFF BRT PNL 08 R4

$V_{AC30A\ RTN}$

LIGHT DIMMER PKG

XFMR 16A T2

PNL F8
- ADI-ATTITUDE DIRECTION IND (1.0A, 5.0W); AVVI-ALTITUDE VERTICAL VELOCITY IND (1.2A, 6.0W)
- HSI-HORIZONTAL SITUATION IND (1.2A, 6.0W); AMI-ALPHA MACH IND (1.2A, 6.0W)
- HYD PRESS 1, 2, 3 (.5A, 2.5W); HYD QUANTITY 1, 2, 3 (.5A, 2.5W); APU FUEL/N_2O QTY 1, 2, 3 (.5A, 2.5W); APU EGT, FUEL PRESS, OIL TEMP (.5A, 2.5W)

7.5A 5A 5A 5A

PNL C2: RH KEYBOARD (1.6A, 8.0W)

PNL F9: AC VOLTS (.5A, 2.5W); DC VOLTS (.5A, 2.5W); DC AMPS, SIG STR (.5A, 2.5W)

NUMERIC FWD

AC30B LIGHTING NUMERIC FWD 3A PNL L4 R CB123

V_{AC30B}

LIGHTING PANEL NUMERIC OFF BRT PNL 08 R5

$V_{AC30B\ RTN}$

LIGHT DIMMER PKG

XFMR 4.8A T1 — 7.5A

PNL 03: RCS/OMS PRPLT QTY (.9A, 4.5W); LEFT FWD/KIT RT FWD MISSION TIMER (1.7A, 8.5W)

XFMR 4.8A T1 — 7.5A

PNL F7: FWD EVENT TIMER (.8A, 4.0W)

INSTRUMENT ORBIT STATION

AC30C LIGHTING INST OS 3A PNL L4 Q CB103

V_{AC30C}

ORBIT STATION LIGHTING INSTRUMENT OFF BRT PNL A6 R4

$V_{AC30C\ RTN}$

LIGHT DIMMER PKG

5VAC

XFMR 16A T2

ADI-ATTITUDE DIREC
SIGNAL STRENGTH (.

3A

NUMERIC ORBIT STATION

AC30C LIGHTING NUMERIC OS 3A PNL L4 Q CB105

V_{AC30C}

ORBIT STATION LIGHTING NUMERIC OFF BRT PNL A6 R5

$V_{AC30C\ RTN}$

LIGHT DIMMER PKG

XFMR 4.8A T1

XFMR 4.8A T2 — 7.5A

BASIC REV E-4

DATE: 09/20/90	NAME: SEW	VERSION: INK: 16
DATE: 09/26/90	NAME: MDU	VERSION: INK: 17
DATE: 10/18/90	NAME: BJT	VERSION: INK: 18

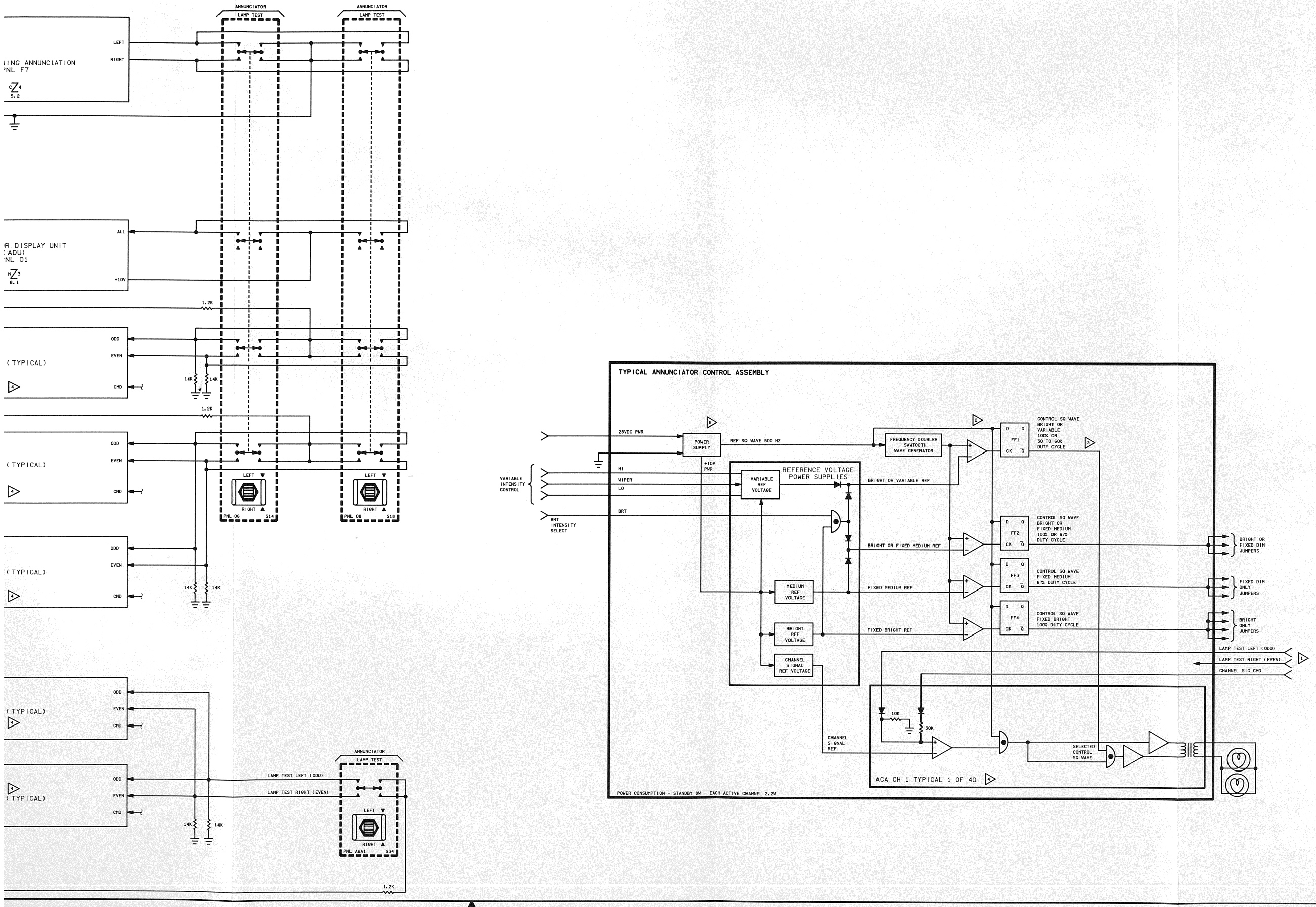

6 POWER SUPPLY PROVIDES +20 VDC POWER AND +10 VDC LOGIC TO THE ACA

5. REFERENCE TABLE 4-II FOR DRAWING REFERENCES

4 REFERENCE DWG 4-I FOR ACA ANNUNCIATION CHANNEL ASSIGNMENT

3 LAMP BRIGHTNESS CONTROL CAPABILITY FOR AN ACA CHANNEL IS DETERMINED BY THE SELECTED CONTROL SQ WAVE. ALL CHANNELS 1 THROUGH 30 ARE SELECTED FOR BRIGHT OR VARIABLE (B OR V). CHANNELS 31 THROUGH 40 MAY BE SELECTED BY JUMPER FOR ANY ONE OF THE FOLOWING:
BRIGHT AND FIXED MEDIUM (B AND M)
FIXED BRIGHT ONLY (BO)
FIXED MEDIUM ONLY (MO)
OR BRIGHT OR VARIABLE (B OR V)
REFERENCE DWG 4-I FOR CHANNEL BRIGHTNESS CONTROL

2 SIMPLIFIED FUNCTIONAL REPRESENTATION

NOTES: 1 LAMP TEST LEFT (ODD) POWERS ODD CHANNELS 1, 3, 5 -- 39. LAMP TEST RIGHT (EVEN) POWERS EVEN CHANNELS 2, 4, 6 -- 40 IN ACA

3 ANNUN

SIGNATURE	DATE	NATIONAL AERONAUTICS AND SPACE ADMINISTRATION LYNDON B. JOHNSON SPACE CENTER HOUSTON, TEXAS
DSGN S.K. KIMBRELL	4-23-79	
DR		ANNUNCIATOR LIGHTING
ENGR RAMI AL-AYOUBI		
ENGR Rami AlAyoubi	9/25/90	
APP Paul M. Joyce	9/25/90	
APP		SPACE SHUTTLE — DWG NO 4.3
OMNIPLAN S.K. Kimbrell	11-7-90	ALL
LTR E — PCN		82.5 X 34 — PAGE — SHEET 1 OF 1

BASIC REV E

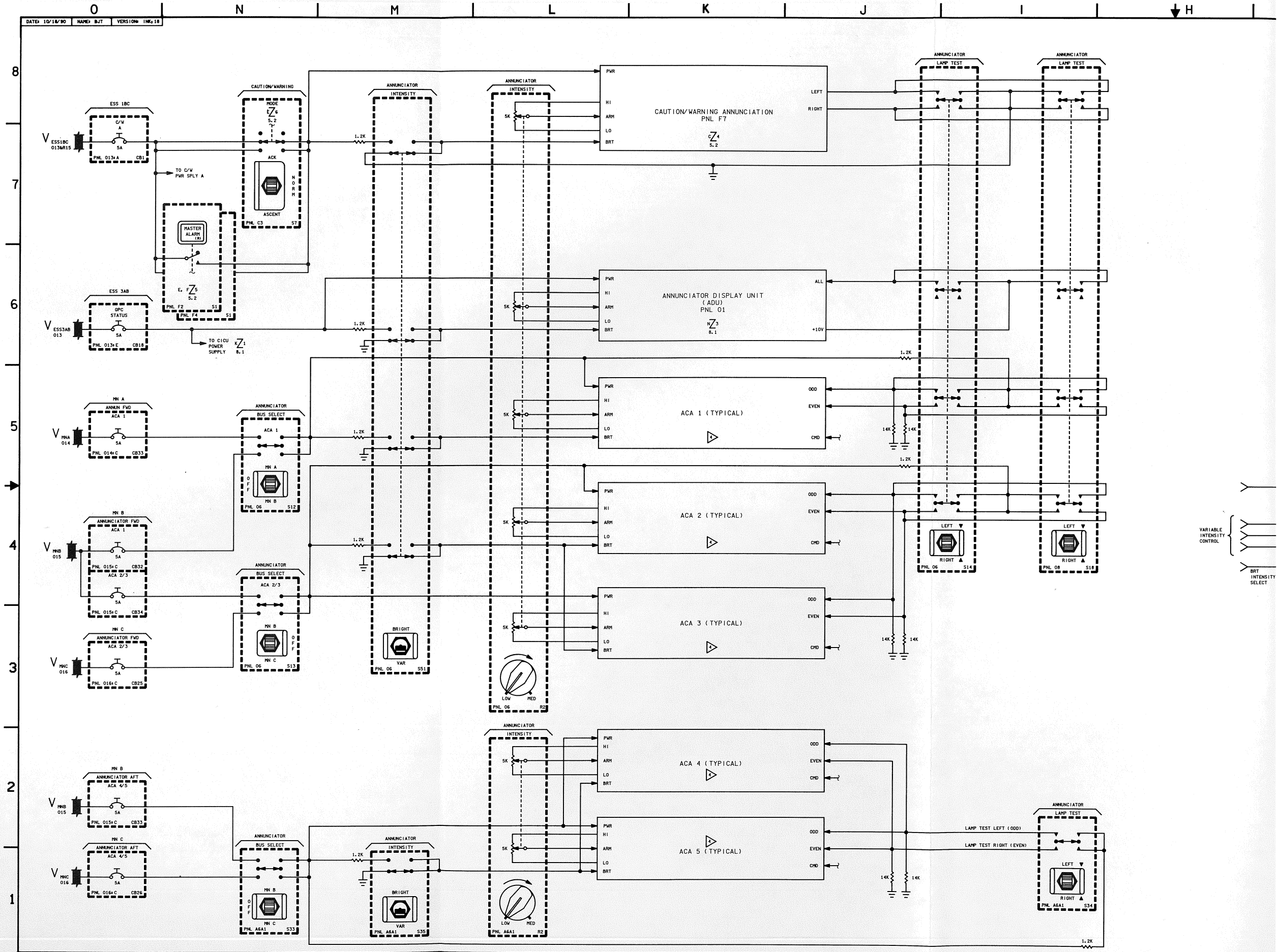

DATE: 10/18/90
NAME: BJT
VERSION: INK: 18
CAUTION/WARNING ANNUNCIATION
PNL F7
ANNUNCIATOR DISPLAY UNIT
(ADU)
PNL 01
ACA 1 (TYPICAL)
ACA 2 (TYPICAL)
ACA 3 (TYPICAL)
ACA 4 (TYPICAL)
ACA 5 (TYPICAL)
ESS 1BC
ESS 3AB
MN A
MN B
MN C
CAUTION/WARNING
MODE
ASCENT
MASTER ALARM
ANNUNCIATOR
INTENSITY
BUS SELECT
ANNUNCIATOR FWD
ANNUNCIATOR AFT
LAMP TEST
LAMP TEST LEFT (ODD)
LAMP TEST RIGHT (EVEN)
VARIABLE INTENSITY CONTROL
BRT INTENSITY SELECT
TO C/W PWR SPLY A
TO CICU POWER SUPPLY

BASIC REV E

DATE: 10/18/90	NAME: BJT	VERSION INK: 9
DATE: 02/14/96	NAME: SVJ	VERSION BPT: 10
DATE: 03/01/96	NAME: SVJ	VERSION INK: 10

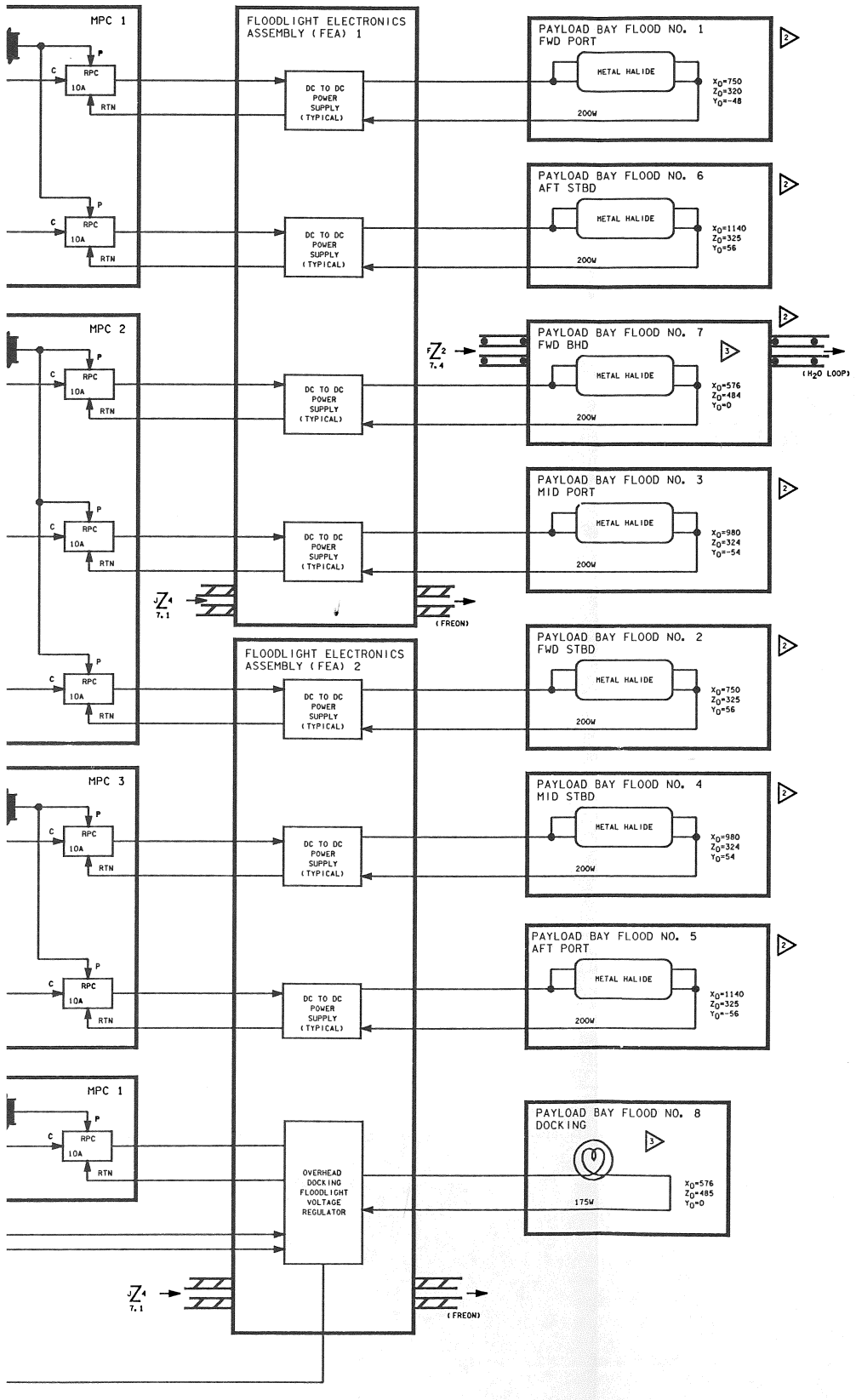

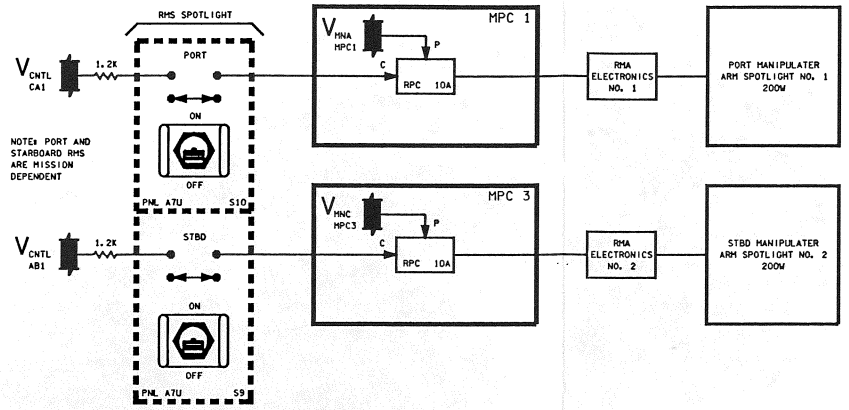

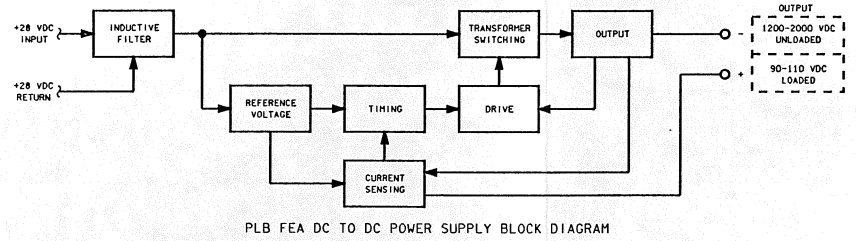

PLB FEA DC TO DC POWER SUPPLY BLOCK DIAGRAM

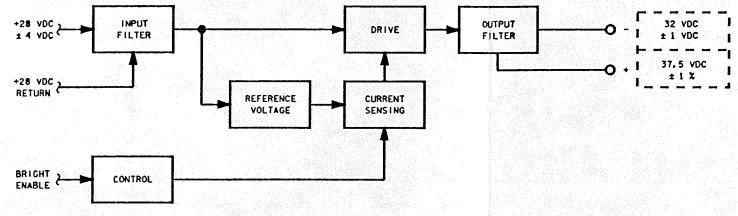

PLB FEA OVERHEAD DOCKING FLOODLIGHT VOLTAGE REGULATOR BLOCK DIAGRAM

5. SEE TABLE 4-II FOR DRAWING REFERENCES

3 ⏚ - DENOTES CASE GROUND

3 THE DOCKING AND FWD BHD FLOODLIGHT ARE MOUNTED ON THE SAME COLDPLATE

2 REQUIRES 2 TO 3 MINUTES TO REACH FULL BRIGHT

NOTES: 1 DIM POSITION IS 60 PERCENT OF FULL BRIGHT

4 EX LTG

SIGNATURE		DATE	
DSGN	L. M. BUCHANAN	1/20/80	NATIONAL AERONAUTICS AND SPACE ADMINISTRATION LYNDON B. JOHNSON SPACE CENTER HOUSTON, TEXAS
DR	L. M. BUCHANAN	1/20/80	
ENGR	M. MAHER		EXTERIOR LIGHTING
ENGR	M. Maher	3/4/96	
APP		3/4/96	
APP			SPACE SHUTTLE — DWG NO 4.4
CADS	S.K. Kimbrell	6-17-96	ALL
LTR E	PCN 6		104.5 X 34 — PAGE — SHEET 1 OF 1

BASIC REV E-6

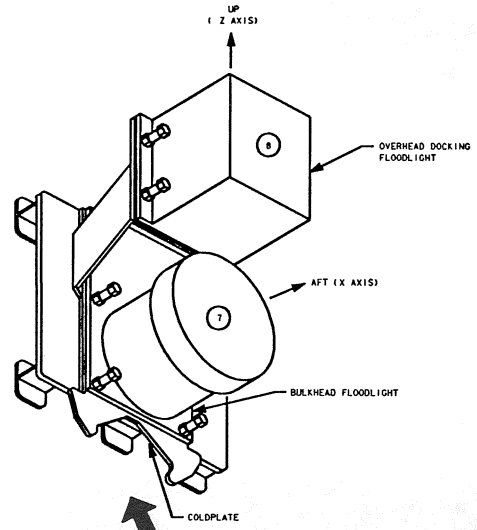

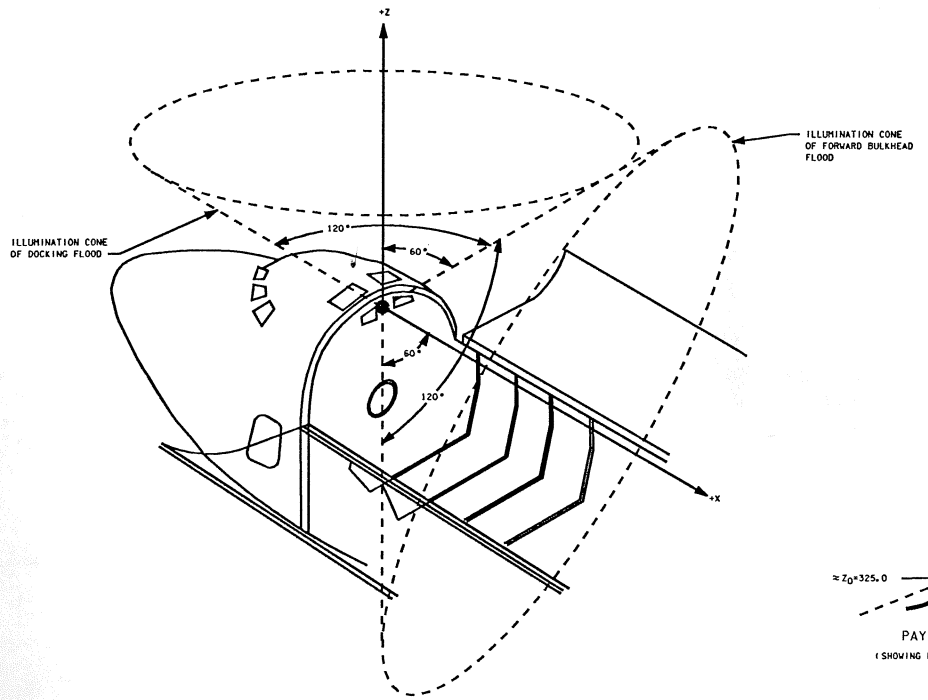

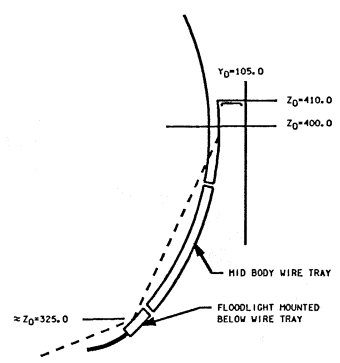

PAYLOAD BAY CROSS SECTION
(SHOWING FLOODLIGHTING ANGLES OF 135° X 135°)

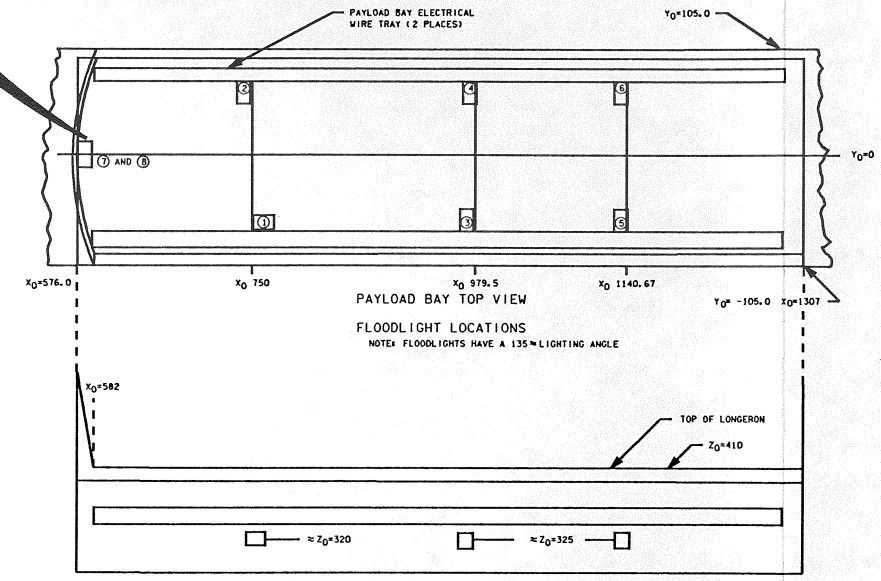

PAYLOAD BAY TOP VIEW

FLOODLIGHT LOCATIONS

NOTE: FLOODLIGHTS HAVE A 135° LIGHTING ANGLE

PAYLOAD BAY VIEW LOOKING INBOARD

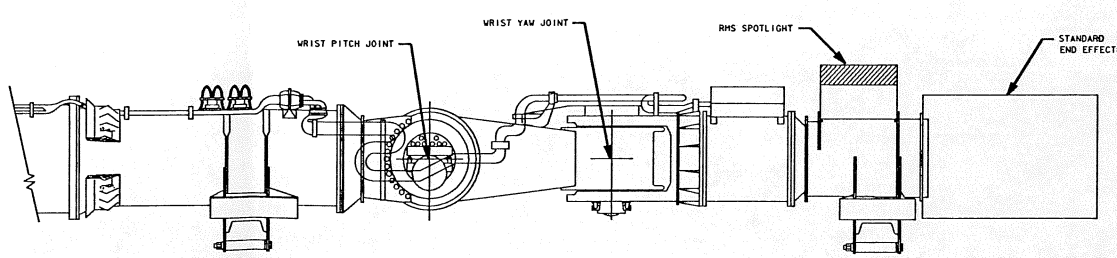

NOTE: RMS MISSION DEPENDENT

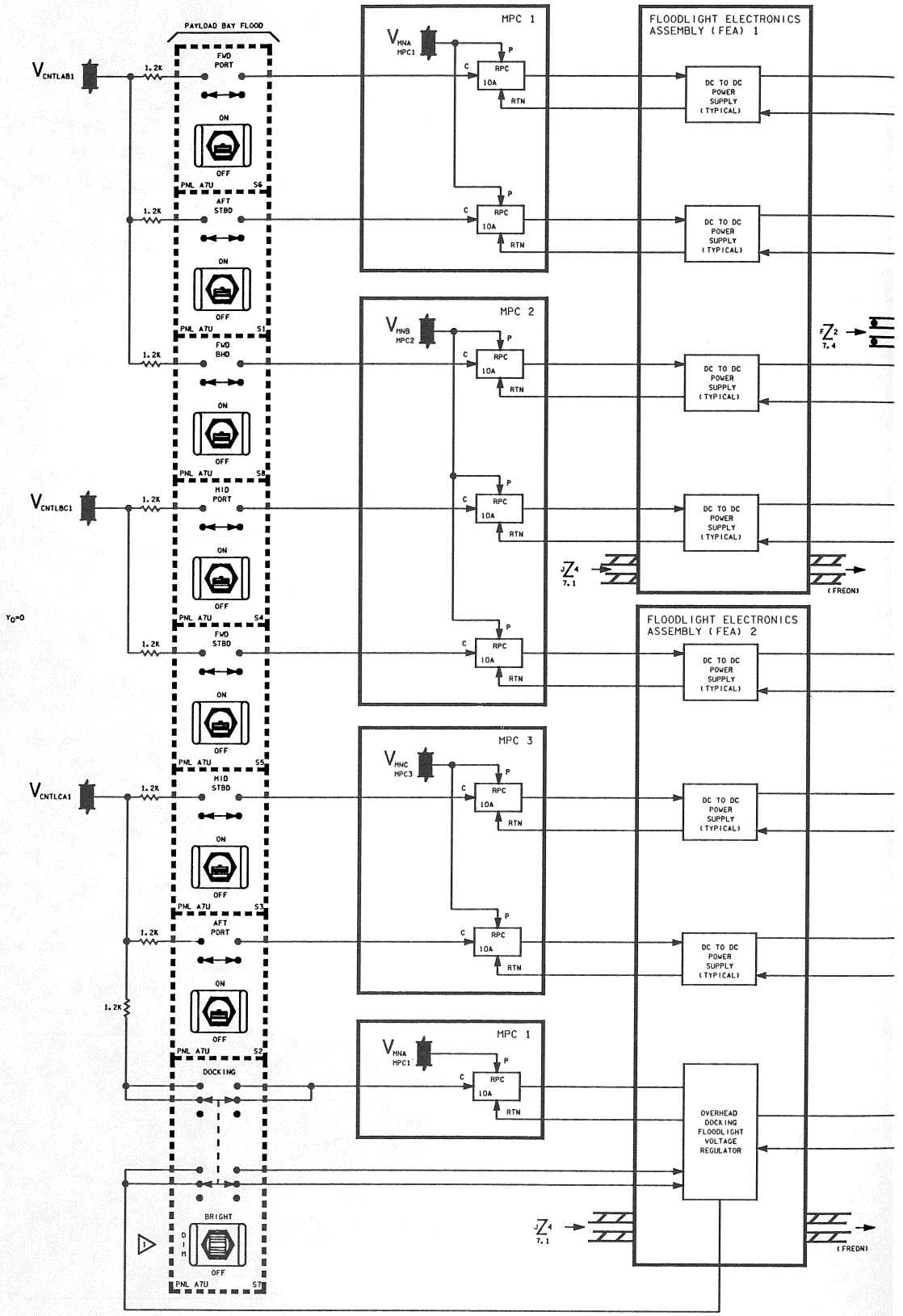

S R O P O N M L

8 7 6 5 4 3 2 1

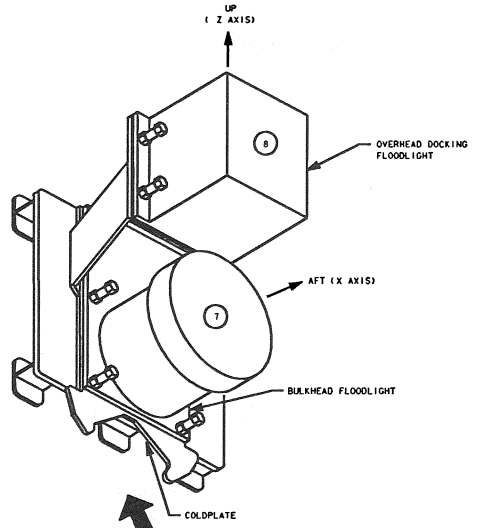

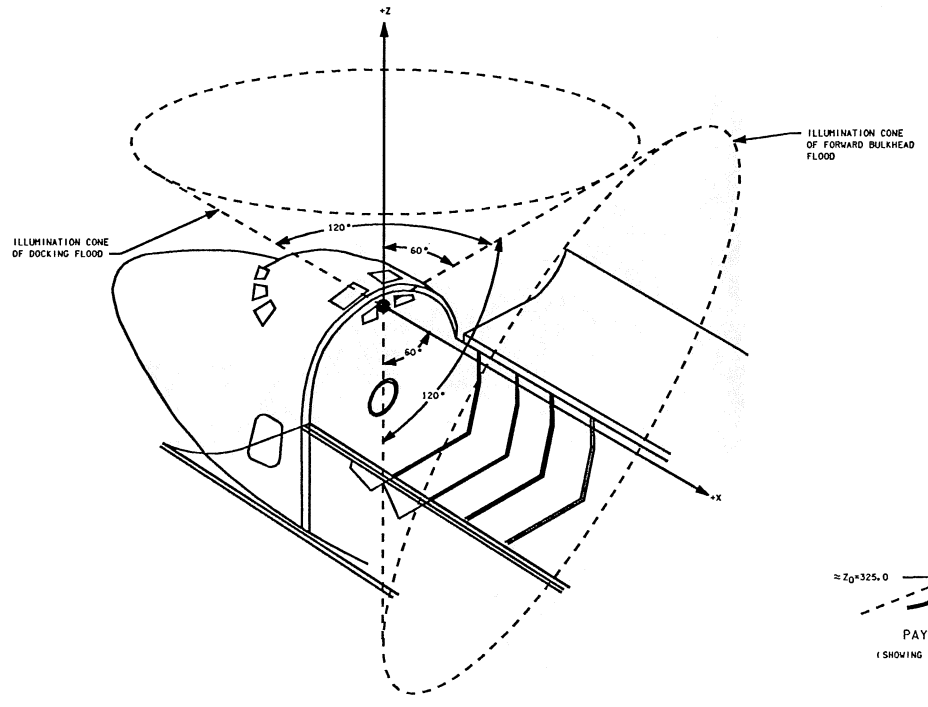

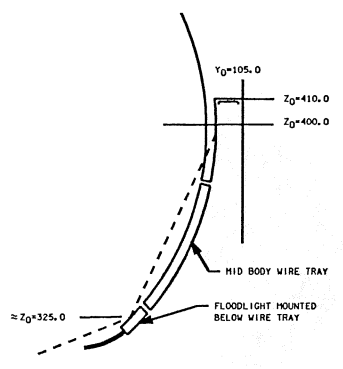

PAYLOAD BAY CROSS SECTION
(SHOWING FLOODLIGHTING ANGLES OF 135° X 135°)

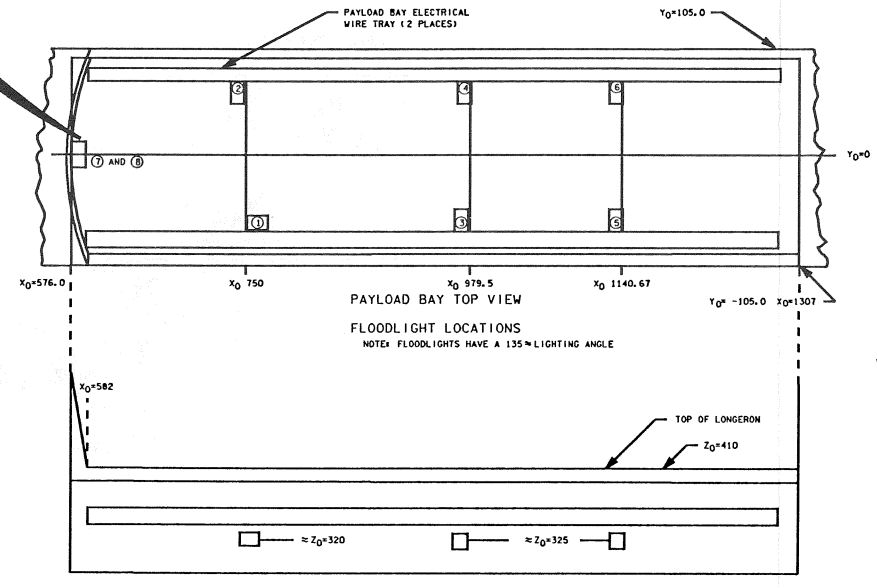

PAYLOAD BAY VIEW LOOKING INBOARD

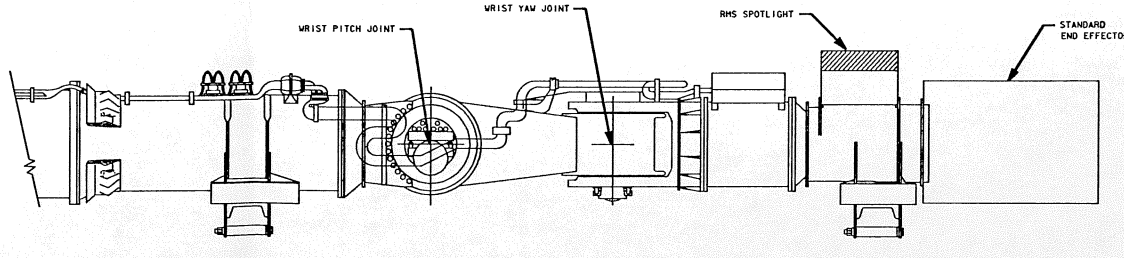

NOTE: RMS MISSION DEPENDENT

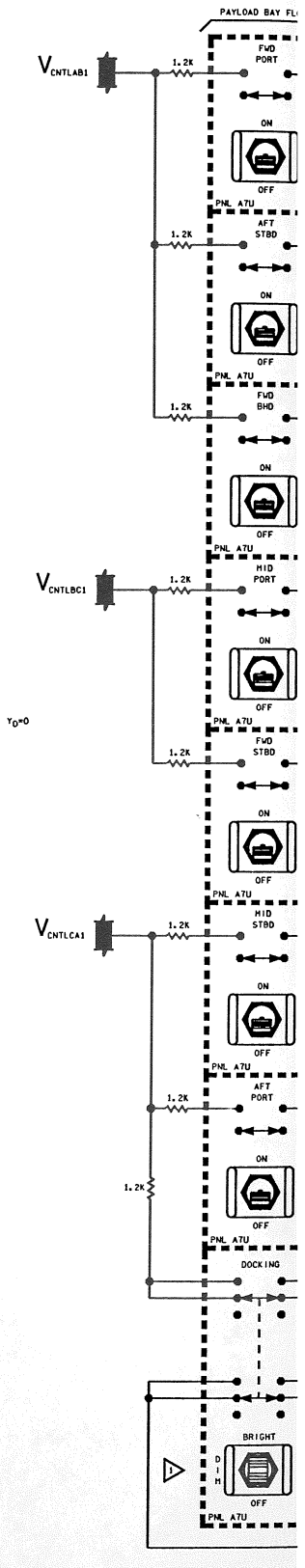

ORBITER DOCKING SYSTEM LIGHTS	
WATTS	125 AT 28 VDC
LUMENS/WATT	12 MINIMUM
BEAM	40° x 40°

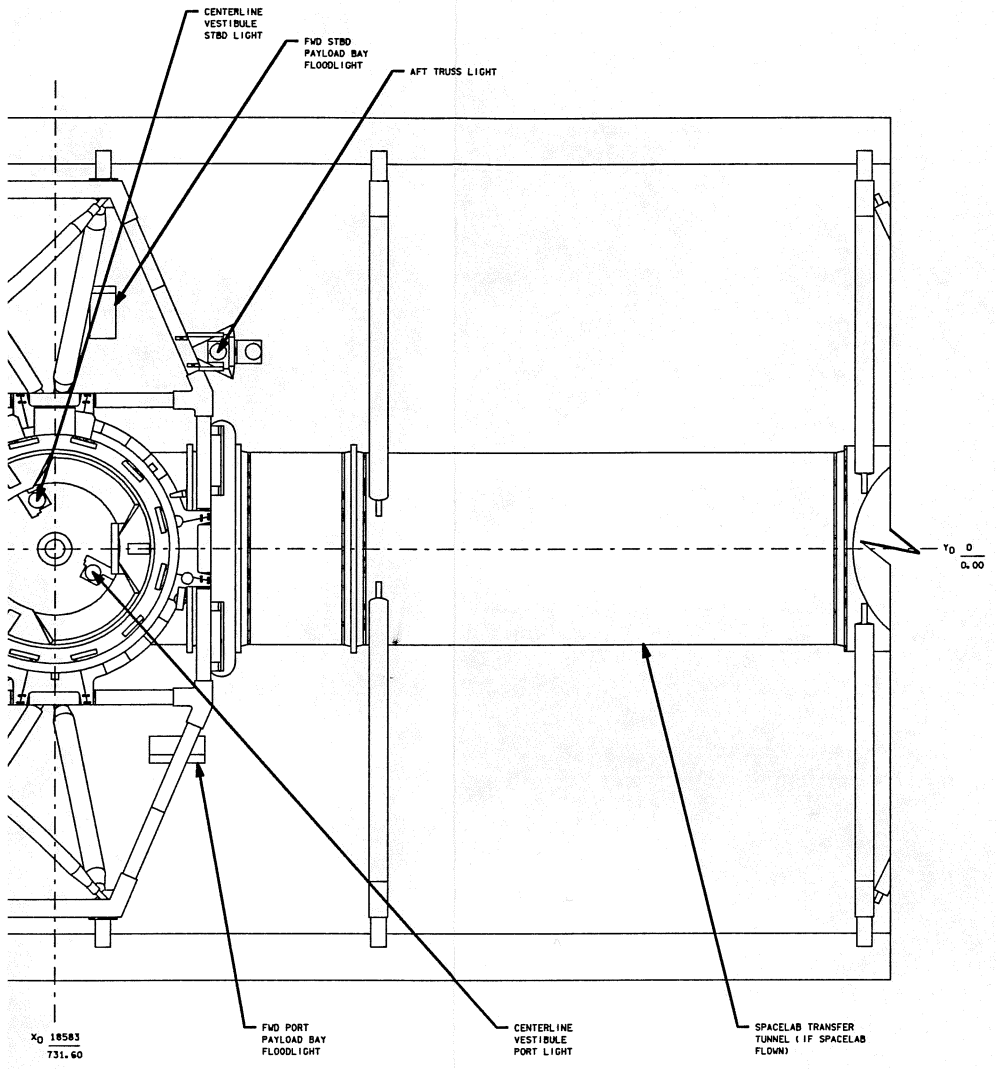

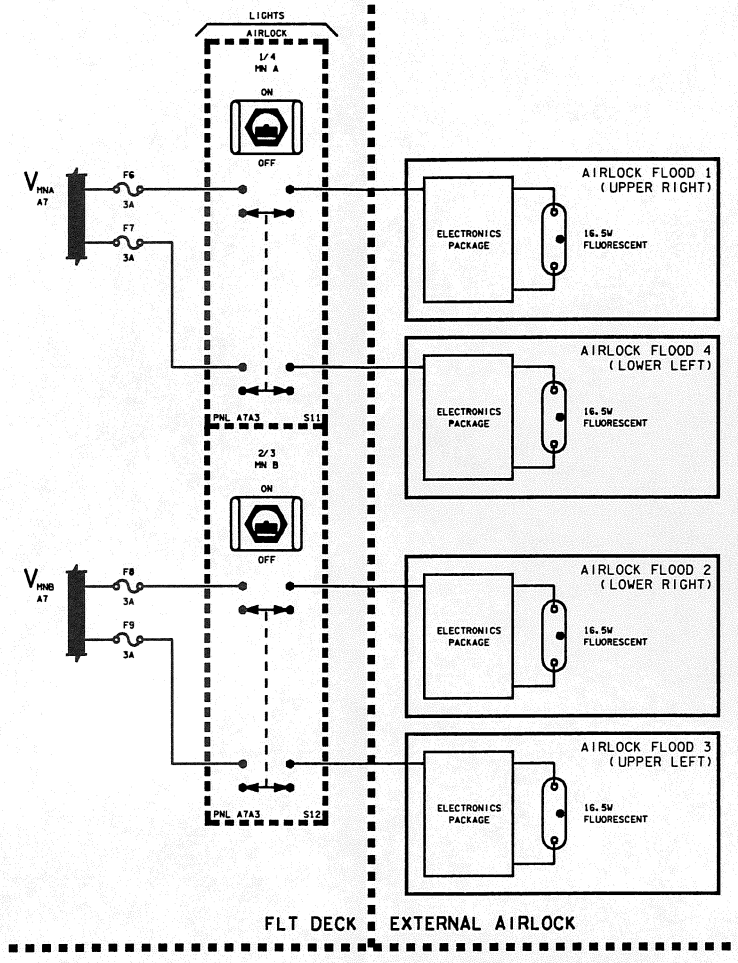

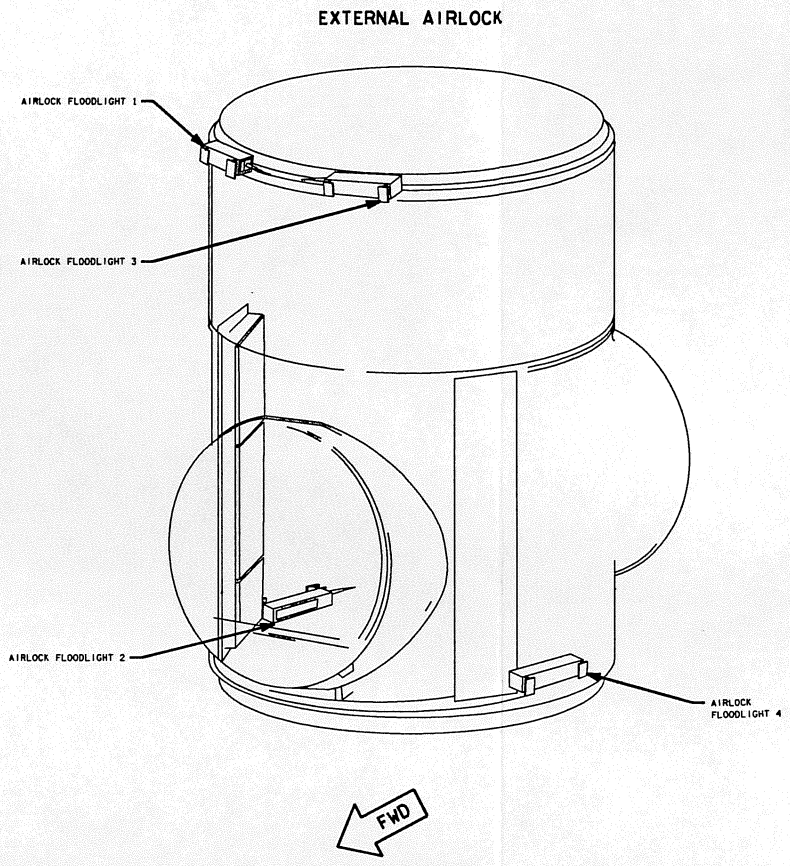

	CENTERLINE LOCATION					
	X_O		Y_O		Z_O	
	IN	MM	IN	MM	IN	MM
	728.34	18500	11.40	290	441.71	11219
	740.94	18820	-7.30	-185	441.71	11219
	687.96	17474	17.82	453	419.21	10648
	770.47	19570	47.43	1205	419.21	10648

OCKING SYSTEM (ODS) CAMERA LIGHT LOCATIONS

ATTACHMENT LOCATION			FIXTURE CENTERLINE			
X_O		SIDE	Y_O		Z_O	
IN	MM		IN	MM	IN	MM
576.00	14630	AFT	0.00	0	484.20	12299
750.00	19050	FORWARD	56.00	1422	325.20	8260
750.00	19050	AFT	-48.00	-1219	320.00	8126
379.50	24879	FORWARD	54.30	1379	323.90	8227
979.50	24879	FORWARD	-54.30	-1379	323.90	8227
140.67	28973	FORWARD	56.00	1422	324.90	8252
140.67	28973	FORWARD	-56.00	-1422	324.90	8252

HUTTLE CARGO BAY LIGHT COORDINATES

▷2 TRUSS AND C/L VESTIBULE LIGHT ASSEMBLIES USE SAME DESIGN AS THE RMS SPOTLIGHT ASSEMBLY

NOTES: ▷1 10A CIRCUIT BREAKERS ARE MAINLY USED TO PROVIDE REDUNDANCY AGAINST A FAILED-ON LIGHT FAILURE SCENARIO

5 ODS AL LGTS

SIGNATURE		DATE	NATIONAL AERONAUTICS AND SPACE ADMINISTRATION LYNDON B. JOHNSON SPACE CENTER HOUSTON, TEXAS
DSGN			
DR B. TEDDER		01/13/94	
ENGR R. ARMSTRONG			ORBITER DOCKING SYSTEM/ AIRLOCK LIGHTS
ENGR		7/27/94	
APP		8/15/94	
APP			SPACE SHUTTLE / DWG NO 4.5
CADS S. K. Kirchhefer		8-9-94	ALL
LTR E	PCN 4		82.5 X 34 / PAGE / SHEET 1 OF 1

BASIC REV E-4

DATE: 07/20/94 | NAME: PSD | VERSION: INK: 1

ORBITER DOCKING SYSTEM LIGHTS	
WATTS	125 AT 28 VDC
LUMENS/WATT	12 MINIMUM
BEAM	40° x 40°

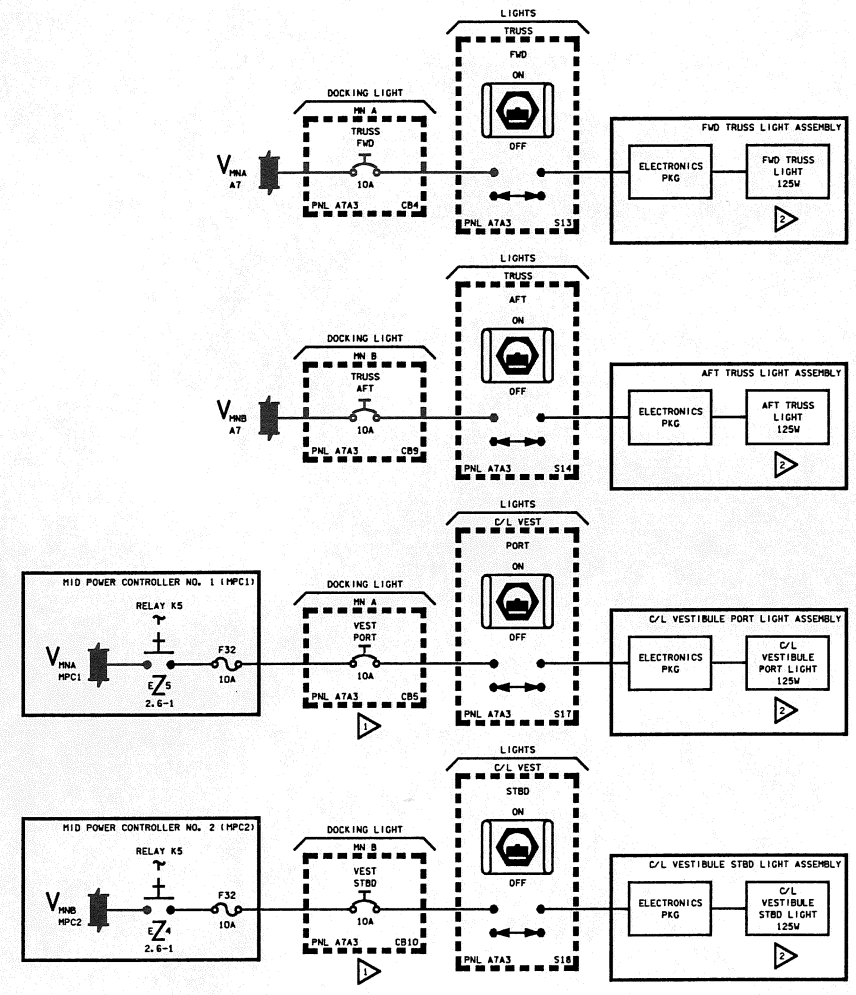

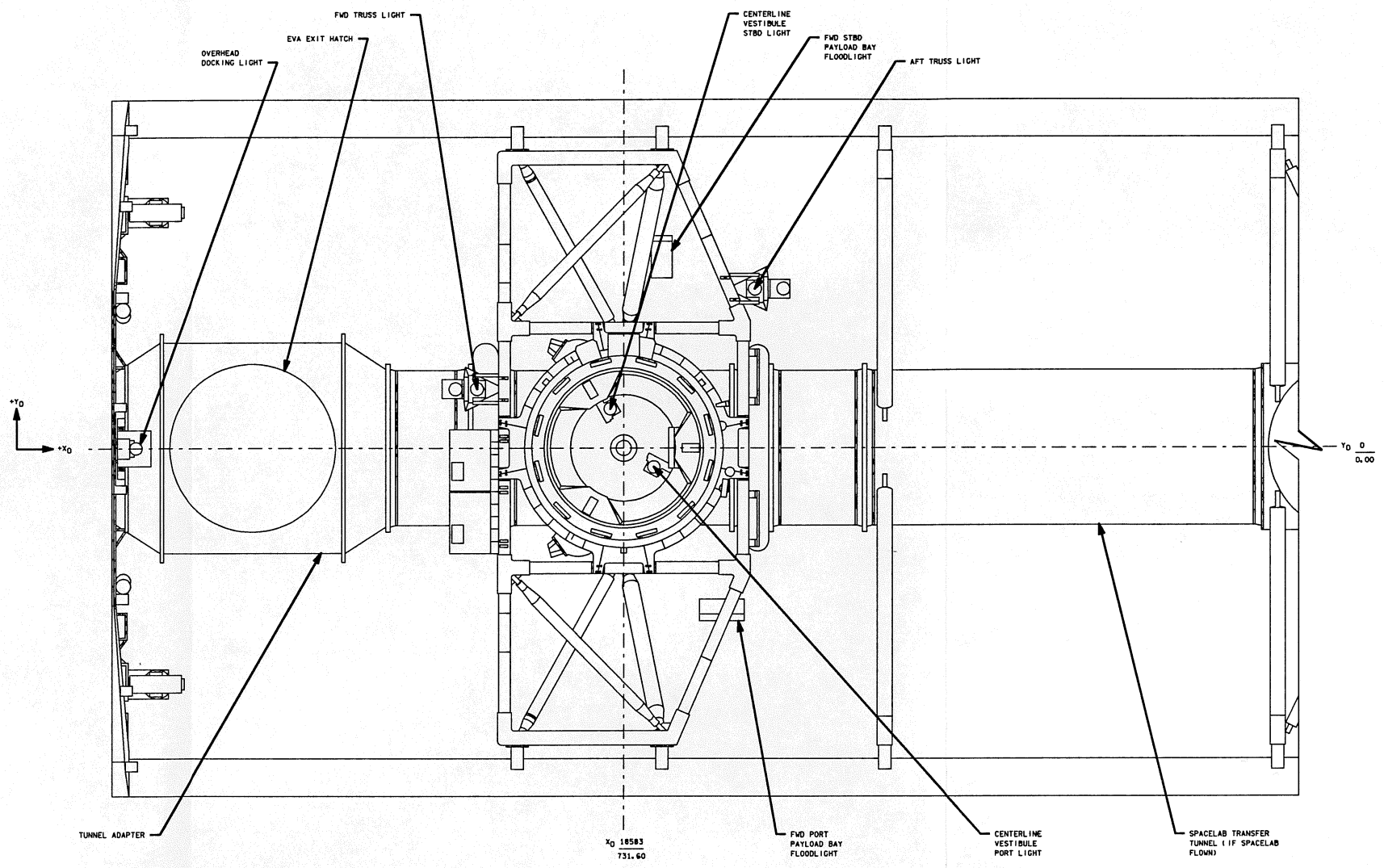

ODS LIGHTS	CENTERLINE LOCATION					
	X_O		Y_O		Z_O	
	IN	MM	IN	MM	IN	MM
CENTERLINE CAMERA LIGHTS	728.34	18500	11.40	290	441.71	11219
	740.94	18820	-7.30	-185	441.71	11219
TRUSS CAMERA LIGHTS	687.96	17474	17.82	453	419.21	10648
	770.47	19570	47.43	1205	419.21	10648

ORBITER DOCKING SYSTEM (ODS) CAMERA LIGHT LOCATIONS

LOCATION OF LIGHTS	ATTACHMENT LOCATION			FIXTURE CENTERLINE			
	X_O		SIDE	Y_O		Z_O	
	IN	MM		IN	MM	IN	MM
FWD BULKHEAD	576.00	14630	AFT	0.00	0	484.20	12299
FWD STBD	750.00	19050	FORWARD	56.00	1422	325.20	8260
FWD PORT	750.00	19050	AFT	-48.00	-1219	320.00	8126
MID STBD	975.50	24879	FORWARD	54.30	1379	323.90	8227
MID PORT	975.50	24879	FORWARD	-54.30	-1379	323.90	8227
AFT STBD	1140.67	28973	FORWARD	56.00	1422	324.90	8252
AFT PORT	1140.67	28973	FORWARD	-56.00	-1422	324.90	8252

SHUTTLE CARGO BAY LIGHT COORDINATES

ACA NO. 3

LAMP TEST RIGHT - EVEN

Panel Number	Light title	Light No.	Color	Channel	No. bulbs	Redundant Bulb Pwr	Brightness Control
F4	BFC	(XDS3)	Y	24	2		B&V
	MASTER ALARM	(S1)	R	32	2	ACA1	B&M
F7A7	MAIN ENGINE 1 STATUS -- SHUTDOWN CTR	(XDS1)	R	8	2		B&V
	OUT OF LIMIT CTR	(XDS1)	Y	16	2		B&V
--	SPARE		-	34	-		B&V
--	SPARE		-	38	-		B&V
--	SPARE		-	40	-		B&V
C3A6	ORBITAL DAP SELECT A	(S1)	W	2	2		B&V
	SELECT B	(S2)	W	4	2		B&V
	CONTROL AUTO	(S3)	W	6	2		B&V
	TRANSLATION ORBITER DAP -- X HIGH	(S16)	W	10	2		B&V
	Y HIGH	(S17)	W	12	2		B&V
	Z HIGH	(S18)	W	14	2		B&V
	X NORM	(S19)	W	18	2		B&V
	Y NORM	(S20)	W	20	2		B&V
	Z NORM	(S21)	W	22	2		B&V
	X PULSE	(S22)	W	26	2		B&V
	Y PULSE	(S23)	W	28	2		B&V
	Z PULSE	(S24)	W	30	2		B&V
M052J	MASTER ALARM	(S3)	R	36	2	ACA1	M0

No. bulbs	Redundant Bulb Pwr	Brightness Control
-		B&V
-		B&V
-		B&V
-		B&V
-		B&V
2		B&V
2		B&V
2		B&V
2		B&V
-		B&V
2		B&V
2		B&V
1	ACA2	B&V
1	ACA2	B&V
1	ACA2	B&V
1	ACA2	B&V
1	ACA2	B&V
1	ACA2	B&V
1	ACA1, 2	B0
2	ACA2	B&V
2		B&V

ACA NO. 4

LAMP TEST RIGHT - EVEN

Panel Number	Light title	Light No.	Color	Channel	No. bulbs	Redundant Bulb Pwr	Brightness Control
A7A1	VIDEO INPUT -- FWD BAY	(S27)	W	14	2		B&V
	KEEL/EVA	(S28)	W	16	2		B&V
	AFT BAY	(S29)	W	18	2		B&V
	PL 1	(S33)	W	20	2		B&V
	PL 2	(S34)	W	22	2		B&V
	PL 3	(S35)	W	24	2		B&V
	MID DECK	(S55)	W	34	2		B&V
	VIDEO OUTPUT -- MON 1	(S19)	W	2	2		B&V
	MON 2	(S23)	W	8	2		B&V
	MUX 1L	(S20)	W	4	2		B&V
	MUX 1R	(S21)	W	6	2		B&V
	MUX 2L	(S24)	W	10	2		B&V
	MUX 2R	(S25)	W	12	2		B&V
	GAMMA -- WHITE STRCH	(S48)	W	26	2		B&V
	NORM	(S49)	W	28	2		B&V
	BLACK STRCH	(S50)	W	30	2		B&V
	MASTER ALARM	(S51)	R	32	2	ACA5	B&M
--	SPARE		-	36	-		B&V
--	SPARE		-	38	-		B&V
--	SPARE		-	40	-		B&V

No. bulbs	Redundant Bulb Pwr	Brightness Control
2		B&V
2		B&V
2		B&V
2		B&V
2		B&V
2		B&V
2		B&V
2		B&V
2		B&V
2		B&V
2		B&V
2		B&V
-		B&V
-		B&V
-		B&V
-		B&V
-		B&V
-		B&V
-		B&V
-		B&V

ACA NO. 5

LAMP TEST RIGHT - ODD

Panel Number	Light title	Light No.	Color	Channel	No. bulbs	Redundant Bulb Pwr	Brightness Control
A2	MIC	--	W	35	2		B&V
	KEY	--	W	37	2		B&V
A6A1	ORBITAL DAP - CONTROL -- MAN	(S11)	W	1	2		B&V
	- RCS JETS -- NORM	(S12)	W	3	2		B&V
	-- VERN	(S13)	W	5	2		B&V
	ROTATION ORBITAL DAP ROLL DISC RATE	(S17)	W	9	2		B&V
	PITCH DISC RATE	(S18)	W	11	2		B&V
	YAW DISC RATE	(S19)	W	13	2		B&V
	ROLL ACCEL	(S23)	W	17	2		B&V
	PITCH ACCEL	(S24)	W	19	2		B&V
	YAW ACCEL	(S25)	W	21	2		B&V
	ROLL PULSE	(S29)	W	25	2		B&V
	PITCH PULSE	(S30)	W	27	2		B&V
	YAW PULSE	(S31)	W	29	2		B&V
--	SPARE		-	7	-		B&V
--	SPARE		-	15	-		B&V
--	SPARE		-	23	-		B&V
--	SPARE		-	31	-		B&V
--	SPARE		-	33	-		B&V
--	SPARE		-	39	-		B&V

LAMP TEST RIGHT - EVEN

Panel Number	Light title	Light No.	Color	Channel	No. bulbs	Redundant Bulb Pwr	Brightness Control
A7A1	VIDEO INPUT -- RMS STBD	(S30)	W	14	2		B&V
	RMS PORT	(S31)	W	16	2		B&V
	FLT/DECK	(S32)	W	18	2		B&V
	MUX 1	(S36)	W	20	2		B&V
	MUX 2	(S37)	W	22	2		B&V
	TEST	(S38)	W	24	2		B&V
	VIDEO OUTPUT --DOWNLINK	(S22)	W	6	2		B&V
	PAYLOAD	(S26)	W	12	2		B&V
	ALC -- PEAK	(S45)	W	26	2		B&V
	NORM	(S46)	W	28	2		B&V
	AVG	(S47)	W	30	2		B&V
	MASTER ALARM	(S51)	R	32	2	ACA4	B&M
--	SPARE		-	2	-		B&V
--	SPARE		-	4	-		B&V
--	SPARE		-	8	-		B&V
--	SPARE		-	10	-		B&V
--	SPARE		-	34	-		B&V
--	SPARE		-	36	-		B&V
--	SPARE		-	38	-		B&V
--	SPARE		-	40	-		B&V

2. REFER TO TABLE 4-II FOR DRAWING REFERENCES

NOTES: 1 OV-102 ONLY

SIGNATURE	DATE
ENGR R. AL-AYOUBI	
ENGR Rami Al-Ayoubi	10/18/90
APP Paul M Joyce	10/18/90

ACA NO. 1

r	Channel	No. bulbs	Redundant Bulb Pwr	Brightness Control
	1	2		B&V
	3	2		B&V
	5	2		B&V
	7	2		B&V
	9	2		B&V
	13	2		B&V
	15	2		B&V
	17	2		B&V
	19	2		B&V
	21	2		B&V
	23	2		B&V
	25	2		B&V
	27	2		B&V
	29	2		B&V
	11	2		B&V
	37	2		B&V
	33	2	ACA2	B&M
	31	2	ACA2	B&M
	35	1	ACA2, 3	BO
	39	1	ACA2, 3	BO

LAMP TEST RIGHT - EVEN

Panel Number	Light title	Light No.	Color	Channel	No. bulbs	Redundant Bulb Pwr	Brightness Control
C3A6	ORBITAL DAP - CONTROL -- MAN	(S4)	W	2	2		B&V
	- RCS JETS -- NORM	(S5)	W	4	2		B&V
	-- VERN	(S6)	W	6	2		B&V
	ROTATION ORBITAL DAP -- ROLL DISC RATE	(S7)	W	10	2		B&V
	PITCH DISC RATE	(S8)	W	12	2		B&V
	YAW DISC RATE	(S9)	W	14	2		B&V
	ROLL ACCEL	(S10)	W	18	2		B&V
	PITCH ACCEL	(S11)	W	20	2		B&V
	YAW ACCEL	(S12)	W	22	2		B&V
	ROLL PULSE	(S13)	W	26	2		B&V
	PITCH PULSE	(S14)	W	28	2		B&V
	YAW PULSE	(S15)	W	30	2		B&V
F4	MASTER ALARM	(S1)	R	32	2	ACA3	B&M
F7A7	MAIN ENGINE 2 STATUS OUT OF LIMIT LEFT	(XDS2)	R	8	2		B&V
	SHUTDOWN LEFT	(XDS2)	Y	16	2		B&V
M052J	MASTER ALARM	(S3)	R	36	2	ACA3	MO
--	SPARE		-	24	-		B&V
--	SPARE		-	34	-		B&V
--	SPARE		-	38	-		B&V
--	SPARE		-	40	-		B&V

AC

LAMP TEST LEFT - ODD

Panel Number	Light title	Light No.	Color	Channel	No. bulbs	Redundant Bulb Pwr	Brightness Control
--	SPARE		-	1	-		B&V
--	SPARE		-	3	-		B&V
--	SPARE		-	5	-		B&V
--	SPARE		-	7	-		B&V
--	SPARE		-	9	-		B&V
F3	NWS FAIL	(XDS3)	Y	35	2		B&V
L1A1	FIRE SUPPRESSION AV BAY 1 AGENT DISCH	(S4)	Y	11	2		B&V
	2 AGENT DISCH	(S5)	Y	13	2		B&V
	3 AGENT DISCH	(S6)	Y	15	2		B&V
--	SPARE		-	37	-		B&V
F6A5	LANDING GEAR -- ARM	(S1)	Y	31	2		B&V
	DOWN	(S2)	G	33	2		B&V
F6A8	RCS COMMAND -- ROLL L	(XDS1)	W	17	1	ACA2	B&V
	ROLL R	(XDS1)	W	19	1	ACA2	B&V
	PITCH U	(XDS1)	W	21	1	ACA2	B&V
	PITCH D	(XDS1)	W	23	1	ACA2	B&V
	YAW L	(XDS1)	W	25	1	ACA2	B&V
	YAW R	(XDS1)	W	27	1	ACA2	B&V
	RANGE SAFE ARM	(XDS3)	R	39	1	ACA1, 2	BO
F7A5	SM ALERT	(XDS1)	B	29	2	ACA2	B&V
F2	NWS FAIL 1	(XDS2)	Y	35	2		B&V

ACA NO. 2

DD

r	Channel	No. bulbs	Redundant Bulb Pwr	Brightness Control
	1	2		B&V
	3	2		B&V
	5	2		B&V
	7	2		B&V
	9	2		B&V
	11	-		B&V
	13	-		B&V
	15	-		B&V
	33	2	ACA1	B&M
	31	2	ACA1	B&M
	39	1	ACA1, 3	BO
	17	1	ACA3	B&V
	19	1	ACA3	B&V
	21	1	ACA3	B&V
	23	1	ACA3	B&V
	25	1	ACA3	B&V
	27	1	ACA3	B&V
	29	2	ACA3	B&V
	35	2		MO
	37	2		MO

LAMP TEST RIGHT - EVEN

Panel Number	Light title	Light No.	Color	Channel	No. bulbs	Redundant Bulb Pwr	Brightness Control
--	SPARE		-	2	-		B&V
--	SPARE		-	4	-		B&V
--	SPARE		-	6	-		B&V
--	SPARE		-	8	-		B&V
--	SPARE		-	10	-		B&V
F3	ANTISKID FAIL	(XDS4)	Y	12	2		B&V
F4	PITCH -- AUTO	(S2)	W	14	2		B&V
	CSS	(S3)	W	16	2		B&V
	GAIN ENA 1	(S4)	W	18	2		B&V
	ROLL/YAW -- AUTO	(S5)	W	20	2		B&V
	CSS	(S6)	W	22	2		B&V
	GAIN ENA 1	(S7)	W	24	2		B&V
	SPD BK/THROT -- AUTO	(S8)	W	26	2		B&V
	MAN	(S8)	W	28	2		B&V
	BODY FLAP -- AUTO	(S9)	W	30	2		B&V
	MAN	(S9)	W	34	2		B&V
F7A7	MAIN ENGINE 3 STATUS -- SHUTDOWN RIGHT	(XDS3)	R	32	2		B&V
	OUT OF LIMIT RIGHT	(XDS3)	Y	38	2		B&V
F8A5	LANDING GEAR -- ARM	(S1)	Y	36	2		B&V
	DOWN	(S2)	G	40	2		B&V
F4	ANTI-SKID FAIL 1	(XD52)	Y	12	2		B&V

AC

LAMP TEST LEFT - ODD

Panel Number	Light title	Light No.	Color	Channel	No. bulbs	Redundant Bulb Pwr	Brightness Control
A6A1	ORBITIAL DAP - SELECT -- A	(S8)	W	1	2		B&V
	- SELECT -- B	(S9)	W	3	2		B&V
	- CONTROL -- AUTO	(S10)	W	5	2		B&V
	TRANSLATION ORBITER DAP -- X HIGH	(S14)	W	9	2		B&V
	Y HIGH	(S15)	W	11	2		B&V
	Z HIGH	(S16)	W	13	2		B&V
	X NORM	(S20)	W	17	2		B&V
	Y NORM	(S21)	W	19	2		B&V
	Z NORM	(S22)	W	21	2		B&V
	X PULSE	(S26)	W	25	2		B&V
	Y PULSE	(S27)	W	27	2		B&V
	Z PULSE	(S28)	W	29	2		B&V
--	SPARE		-	7	-		B&V
--	SPARE		-	15	-		B&V
--	SPARE		-	23	-		B&V
--	SPARE		-	31	-		B&V
--	SPARE		-	33	-		B&V
--	SPARE		-	35	-		B&V
--	SPARE		-	37	-		B&V
--	SPARE		-	39	-		B&V

ALL VEHICLES
REV E

TABLE 4-I. - ANNUNCIATOR CONTROL ASSEMBLY CHANNEL ASSIGNMENTS

ACA NO. 1

LAMP TEST LEFT - ODD

Panel Number	Light title	Light No.	Color	Channel	No. bulbs	Redundant Bulb Pwr	Brightness Control
L1A1	SMOKE DETECTION A -- CABIN	(XDS1)	R	1	2		B&V
	L FLT DECK	(XDS1)	R	3	2		B&V
	AV BAY 1	(XDS1)	R	5	2		B&V
	AV BAY 2	(XDS1)	R	7	2		B&V
	AV BAY 3	(XDS1)	R	9	2		B&V
F2	PITCH -- AUTO	(S2)	W	13	2		B&V
	CSS	(S3)	W	15	2		B&V
	GAIN ENA (1)	(S4)	W	17	2		B&V
	ROLL/YAW -- AUTO	(S5)	W	19	2		B&V
	CSS	(S6)	W	21	2		B&V
	GAIN ENA (1)	(S7)	W	23	2		B&V
	SPD BK/THROT -- AUTO	(S8)	W	25	2		B&V
	MAN	(S8)	W	27	2		B&V
	BODY FLAP -- AUTO	(S9)	W	29	2		B&V
	MAN	(S9)	W	11	2		B&V
	BFC	(XDS3)	Y	37	2		B&V
	MASTER ALARM	(S1)	R	33	2	ACA2	B&M
F6A8	ABORT	(S2)	R	31	2	ACA2	B&M
	RANGE SAFE ARM	(XDS3)	R	35	1	ACA2,3	BO
	RANGE SAFE ARM	(XDS3)	R	39	1	ACA2,3	BO

LAMP TEST RIGHT - EVEN

Panel Number	Light title	Light No.	Color	Channel	No. bulbs	Redundant Bulb Pwr	Brightness Control
C3A6	ORBITAL DAP - CONTROL -- MAN	(S4)	W	2	2		B&V
	- RCS JETS -- NORM	(S5)	W	4	2		B&V
	-- VERN	(S6)	W	6	2		B&V
	ROTATION ORBITAL DAP -- ROLL DISC RATE	(S7)	W	10	2		B&V
	PITCH DISC RATE	(S8)	W	12	2		B&V
	YAW DISC RATE	(S9)	W	14	2		B&V
	ROLL ACCEL	(S10)	W	18	2		B&V
	PITCH ACCEL	(S11)	W	20	2		B&V
	YAW ACCEL	(S12)	W	22	2		B&V
	ROLL PULSE	(S13)	W	26	2		B&V
	PITCH PULSE	(S14)	W	28	2		B&V
	YAW PULSE	(S15)	W	30	2		B&V
F4	MASTER ALARM	(S1)	R	32	2	ACA3	B&M
F7A7	MAIN ENGINE 2 STATUS OUT OF LIMIT LEFT	(XDS2)	R	8	2		B&V
	SHUTDOWN LEFT	(XDS2)	Y	16	2		B&V
M052J	MASTER ALARM	(S3)	R	36	2	ACA3	MO
--	SPARE		-	24	-		B&V
--	SPARE		-	34	-		B&V
--	SPARE		-	38	-		B&V
--	SPARE		-	40	-		B&V

ACA NO. 2

LAMP TEST LEFT - ODD

Panel Number	Light title	Light No.	Color	Channel	No. bulbs	Redundant Bulb Pwr	Brightness Control
L1A1	SMOKE DETECTION B -- PAYLOAD	(XDS1)	R	1	2		B&V
	R FLT DECK	(XDS1)	R	3	2		B&V
	AV BAY 1	(XDS1)	R	5	2		B&V
	AV BAY 2	(XDS1)	R	7	2		B&V
	AV BAY 3	(XDS1)	R	9	2		B&V
--	SPARE		-	11	-		B&V
--	SPARE		-	13	-		B&V
--	SPARE		-	15	-		B&V
F2	MASTER ALARM	(S1)	R	33	2	ACA1	B&M
F6A8	ABORT	(S2)	R	31	2	ACA1	B&M
	RANGE SAFE ARM	(XDS3)	R	39	1	ACA1,3	BO
	RCS COMMAND -- ROLL L	(XDS1)	W	17	1	ACA3	B&V
	ROLL R	(XDS1)	W	19	1	ACA3	B&V
	PITCH U	(XDS1)	W	21	1	ACA3	B&V
	PITCH D	(XDS1)	W	23	1	ACA3	B&V
	YAW L	(XDS1)	W	25	1	ACA3	B&V
	YAW R	(XDS1)	W	27	1	ACA3	B&V
F7A5	SM ALERT	(XDS1)	B	29	2	ACA3	B&V
M029J	MIC	--	W	35	2		MO
	KEY	--	W	37	2		MO

LAMP TEST RIGHT - EVEN

Panel Number	Light title	Light No.	Color	Channel	No. bulbs	Redundant Bulb Pwr	Brightness Control
--	SPARE		-	2	-		B&V
--	SPARE		-	4	-		B&V
--	SPARE		-	6	-		B&V
--	SPARE		-	8	-		B&V
--	SPARE		-	10	-		B&V
F3	ANTISKID FAIL	(XDS4)	Y	12	2		B&V
F4	PITCH -- AUTO	(S2)	W	14	2		B&V
	CSS	(S3)	W	16	2		B&V
	GAIN ENA (1)	(S4)	W	18	2		B&V
	ROLL/YAW -- AUTO	(S5)	W	20	2		B&V
	CSS	(S6)	W	22	2		B&V
	GAIN ENA (1)	(S7)	W	24	2		B&V
	SPD BK/THROT -- AUTO	(S8)	W	26	2		B&V
	MAN	(S8)	W	28	2		B&V
	BODY FLAP -- AUTO	(S9)	W	30	2		B&V
	MAN	(S9)	W	34	2		B&V
F7A7	MAIN ENGINE 3 STATUS -- SHUTDOWN RIGHT	(XDS3)	R	32	2		B&V
	OUT OF LIMIT RIGHT	(XDS3)	Y	38	2		B&V
F8A5	LANDING GEAR -- ARM	(S1)	Y	36	2		B&V
	DOWN	(S2)	G	40	2		B&V
F4	ANTI-SKID FAIL (1)	(XD52)	Y	12	2		B&V

FOR DETAILED COMPONENT AND LOGIC INFORMATION REFER TO:

SSSH DWG NO.	SSSH DWG TITLE	VENDOR NAME	VENDOR DWG NO.	VENDOR SHEET NO.	REV	DATE	VENDOR DRAWING TITLE
4.1	INTERIOR FLOOD LIGHTING	R. I.	VS70-730139	1 OF 3	D	3/26/90	INTERIOR LIGHTING SUBSYSTEM
		R. I.	VS70-730209	1 OF 3	—	5/1/80	AIRLOCK MODULE LIGHTING SUBSYSTEM
		R. I.	VS75-733952	1 OF 2	B	1/17/79	PANEL AW18A - AIRLOCK PANEL NO. 1
		R. I.	VS70-730202	1 OF 3	F	5/1/80	AIRLOCK MODULE LIGHTING SUBSYSTEM
		R. I.	VS70-730142	1 OF 3	E	5/1/90	INTERIOR LIGHTING SUBSYSTEM
		R. I.	VS70-973102	44.1	F/G04	10/1/90	TUNNEL ADAPTER FLOOD LIGHTING
		R. I.	VS70-973099	44.1	A/B03	4/25/90	TUNNEL ADAPTER FLOOD LIGHTING
		JSC	JSC-18827	—	D	9/84	SPACELAB D&C PROCEDURAL NOMENCLATURE
		R. I.	VS70-973099	41	A/B03	4/25/90	INTERIOR LIGHTING CREW COMPARTMENT - PART 1
		R. I.	VS70-973099	42	A/B03	4/25/90	INTERIOR LIGHTING CREW COMPARTMENT - PART 11
		R. I.	VS70-973102	39	F/G04	10/1/90	INTERIOR LIGHTING CREW COMPARTMENT 1
		R. I.	VS70-973102	40	F/G04	10/1/90	INTERIOR LIGHTING CREW COMPARTMENT II
		R. I.	VS70-973102	44	F/G04	10/1/90	AIRLOCK ILLUMINATION
		R. I.	VS70-973099	44	A/B03	4/25/90	AIRLOCK ILLUMINATION
4.2 (SHEETS 1-2)	INST/NUMERIC/EDGE PANEL LIGHTING	R. I.	VS70-730239	1-6	A/B03	4/25/90	EDGE LIGHTED PANELS
		R. I.	VS70-730229	1-2	B	9/02/82	INSTRUMENT/NUMERIC LIGHTING
		R. I.	VS70-730222	1-2	E	6/5/84	INSTRUMENT/NUMERIC LIGHTING
		R. I.	VS70-730232	1-6	D	10/8/79	INSTRUMENT/NUMERIC LIGHTING
		R. I.	ECN 104-25012A	33 OF 43		1/15/94	THE SHUTTLE/MIR DOCKING SYSTEM - ORBITER DOCKING SYSTEM (ODS)
4.3	ANNUNCIATOR LIGHTING	R. I.	VS70-730249	1-8	A	3/8/83	D&C ANNUNCIATOR SUBSYSTEM
		R. I.	VS70-730242	1-8	F	9/30/82	D&C ANNUNCIATOR SUBSYSTEM
		R. I.	VS70-973102	20-24, 30,31	F/G04	10/1/90	INTEGRATED SYSTEM SCHEMATIC - DISPLAYS AND CONTROLS OV-102
		R. I.	VS70-973099	20-24, 30,31	A/B03	4/25/90	INTEGRATED SYSTEM SCHEMATIC - DISPLAYS AND CONTROLS OV-099, -103 AND -104
		AEROSPACE AVIONICS	SK500T90	N/A	APP	12/13/76	ANNUNCIATOR CONTROL ASSEMBLY
TABLE 4-I	ANNUNCIATOR CONTROL ASSEMBLY CHANNEL ASSIGNMENTS	R. I.	VS70-730249	1-8	A	3/8/83	D&C ANNUNCIATOR SUBSYSTEM
			VS70-730242	1-8	F	9/30/82	D&C ANNUNCIATOR SUBSYSTEM
			VS70-973102	20-24, 30, 31	F/G04	10/1/90	INTEGRATED SYSTEM SCHEMATIC DISPLAYS AND CONTROLS OV-102
			VS70-973099	20-24, 30, 31	A/B03	4/25/90	INTEGRATED SYSTEM SCHEMATIC DISPLAYS AND CONTROLS OV-099, 103 AND 104

DWG	SIGNATURE	DATE	DWG	SIGNATURE	DATE
4.1	ENGR C. B. GUDERIAN		TBL 4-I	ENGR R. AL-AYOUBI	
	ENGR Carl B. Guderian	9/22/94		ENGR Rami Al-Ayoubi	9/22/94
4.2-1	ENGR C. B. GUDERIAN			ENGR	
	ENGR Carl B. Guderian	9/22/94		ENGR	
4.2-2	ENGR R. ARMSTRONG			APP Paul M. Joyce	9/22/94
	ENGR R. Armstrong	9/22/94		APP	
4.3	ENGR R. AL-AYOUBI			APP	
	ENGR Rami Al-Ayoubi	9/22/94		LTR E PCN 4	

NATIONAL AERONAUTICS AND SPACE ADMINISTRATION
LYNDON B. JOHNSON SPACE CENTER HOUSTON, TEXAS

VENDOR DRAWING REFERENCES

SPACE SHUTTLE	TBL NO 4-II	
ALL		
	PAGE 4.II-1	SHEET 1 OF 2

BASIC REV E-4

FOR DETAILED COMPONENT AND LOGIC INFORMATION REFER TO:

SSSH DWG NO.	SSSH DWG TITLE	VENDOR NAME	VENDOR DWG NO.	VENDOR SHEET NO.	REV	DATE	VENDOR DRAWING TITLE
4.4	EXTERIOR LIGHTING	R. I.	VS70-730212	1 OF 2	E	3/3/82	MANIPULATOR ARM LIGHTING SUBSYSTEM
		R. I.	VS70-730162	1 OF 2	D	7/22/80	D&C EXTERIOR LIGHTING SUBSYSTEM
		R. I.	VS70-730219	1 OF 2	A	3/3/82	MANIPULATOR ARM LIGHTING SUBSYSTEM
		R. I.	VS70-973102	11	F/G04	10/1/90	ORBITER D&C PANEL CONFIG
		R. I.	VS70-973099	11	A/B03	4/25/90	ORBITER D&C PANEL CONFIG
		R. I.	MC4340062	21 & 22	A		FLODLIGHT ASSEMBLY-PAYLOAD BAY
		R. I.	MC4340066	10			FLOODLIGHT ASSEMBLY OVERHEAD DOCKING
		SPAR	RMS-M 1140-1-004				MANIPULATOR ARM OVERALL DIMENSIONS
		NSTS	07700 VOL. XIV	3-27, 28 8-36	I	SEPT, 1986	SPACE SHUTTLE SYSTEM PAYLOAD ACCOMODATIONS, LEVEL II PROGRAM DEFINITION AND REQUIREMENTS
		R. I.	VS70-973102	43	F/G04	10/1/90	D&C EXTERIOR LIGHTING
		R. I.	VS70-973102	46	F/G04	10/1/90	MANIPULATOR ARM LIGHTING
		R. I.	VS70-973099	43	A/B03	4/25/90	D&C EXTERIOR LIGHTING
		R. I.	VS70-973099	46	A/B03	4/25/90	MANIPULATOR ARM LIGHTING
4.5	ORBITER DOCKING SYSTEM AIRLOCK LIGHTS	R. I.	ECN 104-25012A	35, 36, 41 OF 43		1/15/94	THE SHUTTLE/MIR DOCKING SYSTEM - ORBITER DOCKING SYSTEM (ODS)
		NASA/NPOE	NASA/NPOE/ 000/4.02.02	4.02.02.1-6; 4.02.02.1-7		4/2/94	SHUTTLE/MIR PHYSICAL CHARACTERISTICS

DWG	SIGNATURE		DATE
4.4	ENGR	R. AL-AYOUBI	
	ENGR	Rami Al-Ayoubi	9/22/94
4.5	ENGR	R. ARMSTRONG	
	ENGR	Robt Armstrong	9/20/94
	APP	Paul M Lowe	9/22/94
	APP		
	APP		
	LTR E	PCN 4	

NATIONAL AERONAUTICS AND SPACE ADMINISTRATION
LYNDON B. JOHNSON SPACE CENTER HOUSTON, TEXAS

VENDOR DRAWING REFERENCES

SPACE SHUTTLE	TBL NO 4-II	
ALL		
	PAGE 4.II-2	SHEET 2 OF 2

BASIC REV E-4

DATE: 05/05/90	NAME: MAG	VERSION: BPT: 11
DATE: 10/02/90	NAME: BJT	VERSION: BPT: 12
DATE: 10/22/90	NAME: BJT	VERSION: INK: 3

AVIONICS BAY 1

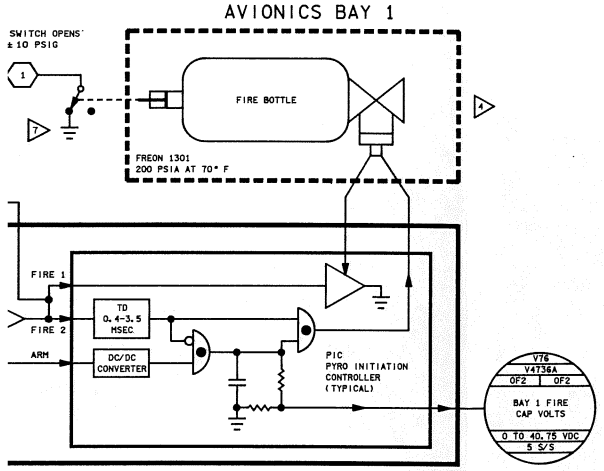

AVIONICS BAY 2

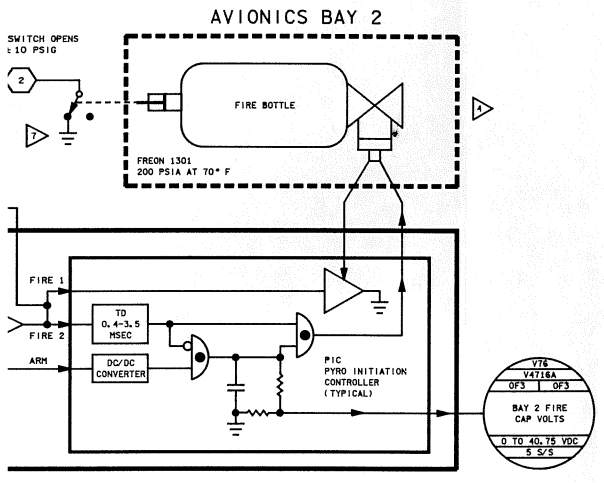

AVIONICS BAY 3A

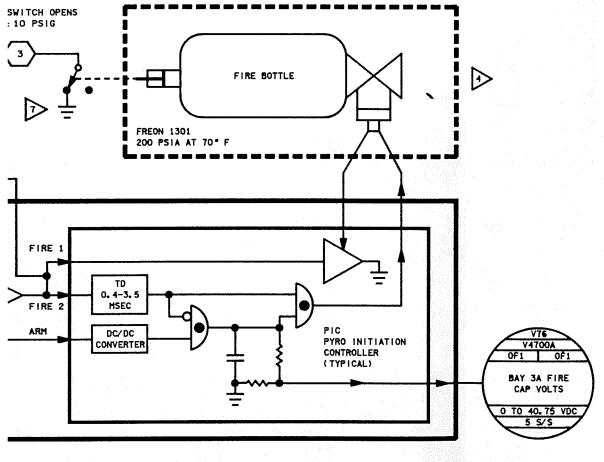

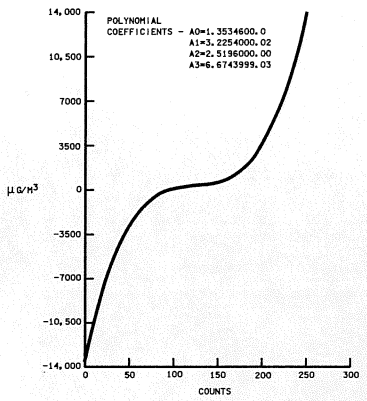

SMOKE DETECTOR CALIBRATION CURVE, MCC (TYPICAL)

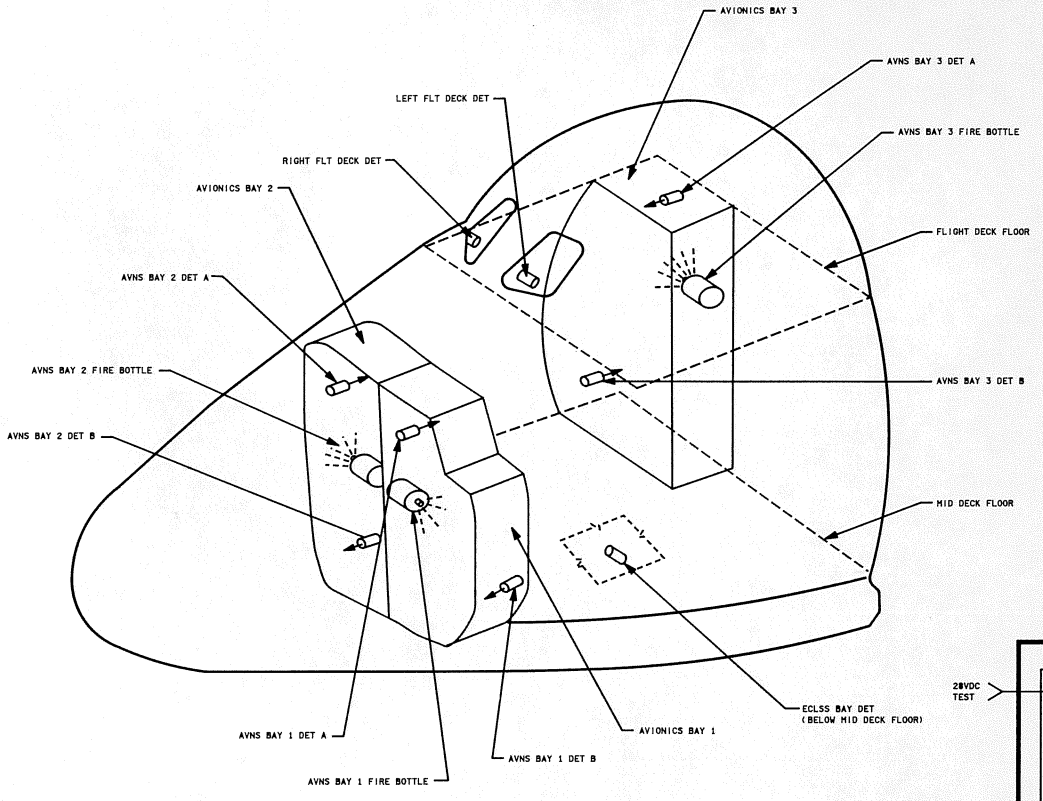

DETECTOR LOCATIONS

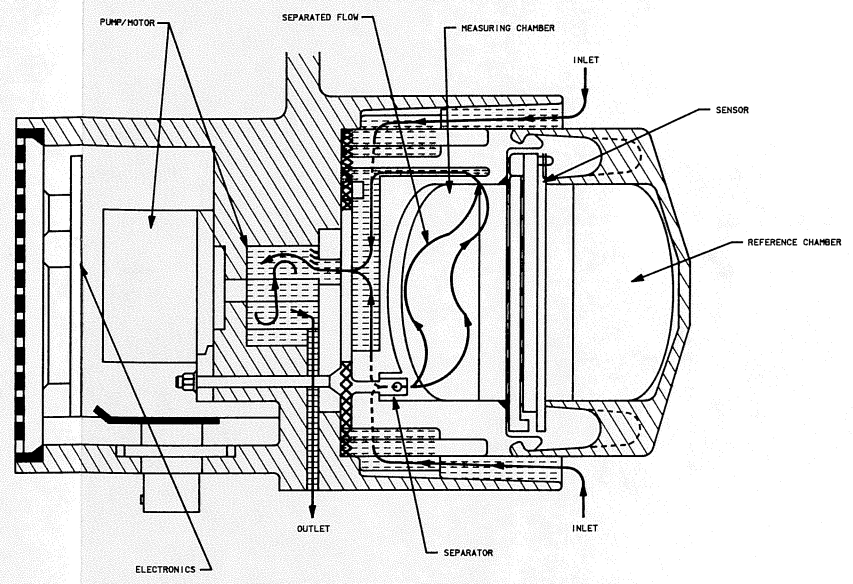

SMOKE DETECTOR

CONCENTRATION SIGNATURES OF HALON DISCHARGE FROM A HAND-HELD AND BUILT-IN EXTINGUISHER

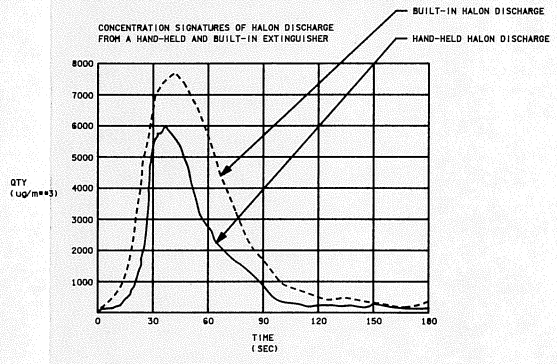

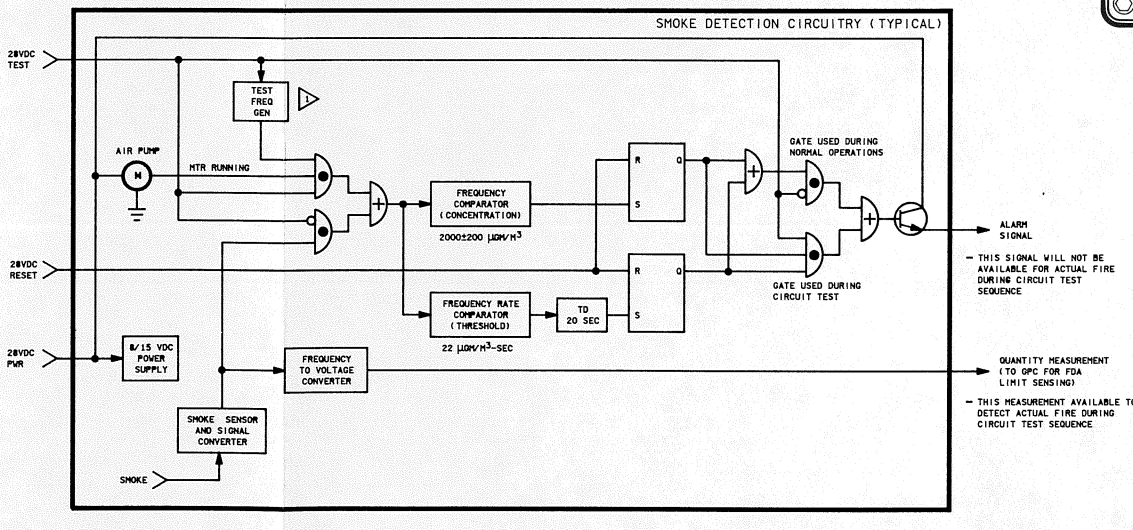

CABIN SMOKE DETECTORS, TIME TO ACTIVATE

SMOKE SOURCE		TIME TO ACTIVATE DETECTOR	
LOCATION	STRENGTH GM/MIN	CABIN FAN OUTLET (MIN)	FLIGHT DECK (MIN)
EQUIPMENT BAY	0.2	2.4	5.5
PASSENGER COMPARTMENT	0.2	0.3	1.8
FLIGHT DECK	0.2	*	0.2
EQUIPMENT BAY	0.5	1.8	3.5
PASSENGER COMPARTMENT	0.5	0.1	1.0
FLIGHT DECK	0.5	*	0.1
EQUIPMENT BAY	1.0	1.1	2.9
PASSENGER COMPARTMENT	1.0	0.06	0.8
FLIGHT DECK	1.0	*	0.05

* THE CABIN FAN CIRCULATES THE CABIN ATMOSPHERE EVERY SEVEN MINUTES

ON PANEL L1

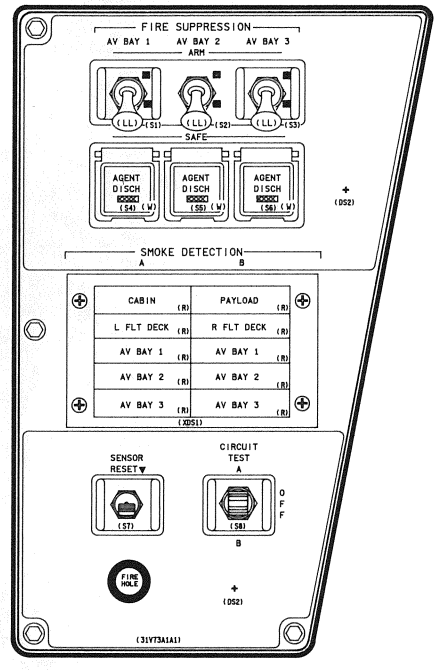

△7 WHEN THE HALON BOTTLE PRESSURE BECOMES LOWER THAN 60 ± 10 PSIG THE PRESSURE SWITCH OPENS REDIRECTING POWER FROM GROUND TO THE "BOTTLE EMPTY" TELEMETRY

△8 ACA POWERED BY MNB 015 OR MNC 016 DEPENDING ON THE BUS SWITCH POSITION

5 SEE TABLE 5-III FOR DRAWING REFERENCES

△9 DISCHARGE WILL PRODUCE AN 8000 TO 9000 UG/M³ CONCENTRATION READOUT FROM HALON ALONE

△10 OPTIONAL INPUT - DEPENDS ON PAYLOAD

△11 A 6A FUSE LINK WITH THE TRIPPING CHARACTERISTICS OF A 3A FUSE

NOTES: △12 TEST FREQUENCY PROFILE INITIATED BY SELF-TEST INPUT SIMULATING A PARTICULATE CONCENTRATION ABOVE 2200 μGM/M³ INCREASING AT A RATE GREATER THAN 22 μGM/M³-SEC

1 SMOKE

SIGNATURE		DATE	
DSGN LAURIE BUCHANAN		5-14-79	NATIONAL AERONAUTICS AND SPACE ADMINISTRATION LYNDON B. JOHNSON SPACE CENTER HOUSTON, TEXAS
DR			
ENGR M. FITZPATRICK		8/27/90	SMOKE DETECTION AND FIRE SUPPRESSION
ENGR		10/2/90	
APP		10/2/90	
APP			SPACE SHUTTLE — DWG NO 5.1
OMNIPLAN S.K. Kimbrell		11-14-90	ALL
LTR E	PCN		126.5 X 34 — PAGE — SHEET 1 OF 1

BASIC REV E

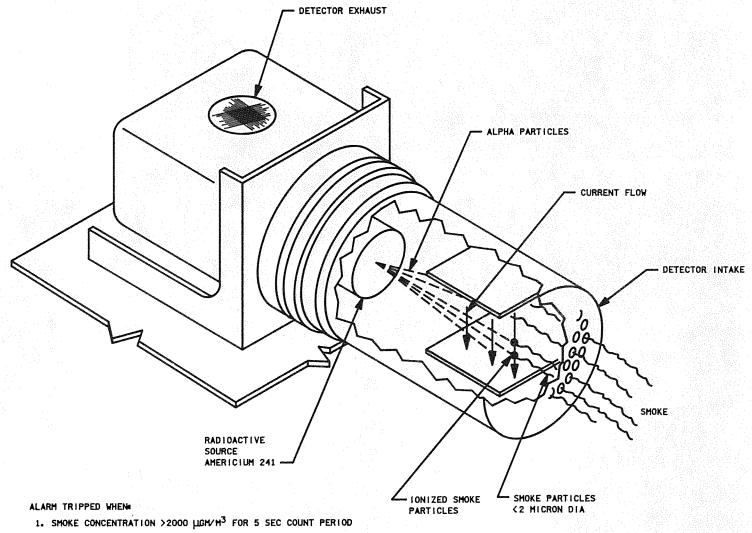

ALARM TRIPPED WHEN:
1. SMOKE CONCENTRATION >2000 μGM/M³ FOR 5 SEC COUNT PERIOD
2. RATE OF SMOKE INCREASE >22 μGM/M³ - SEC FOR 8 SUCCESSIVE COUNTS IN 20 SEC

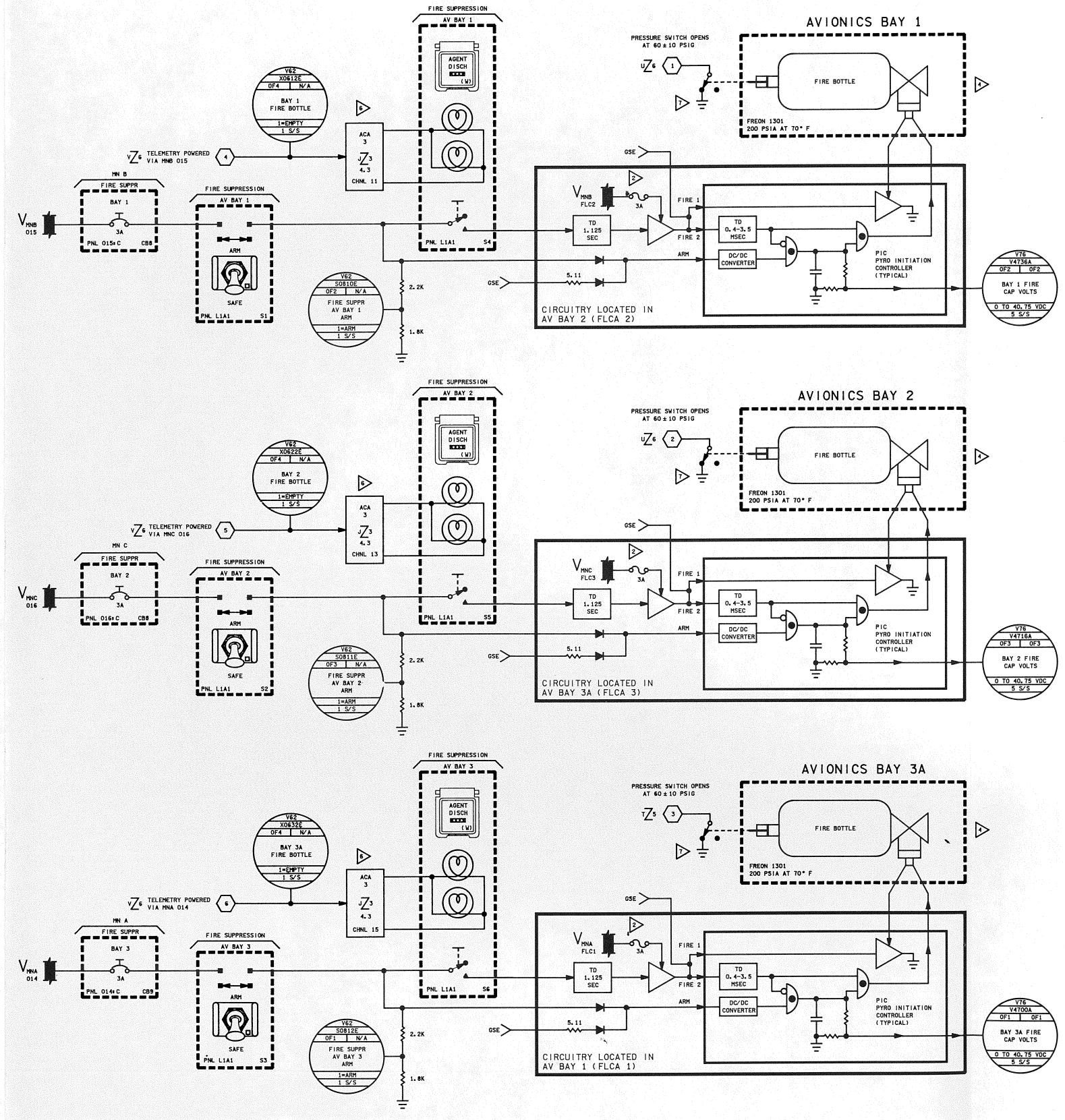

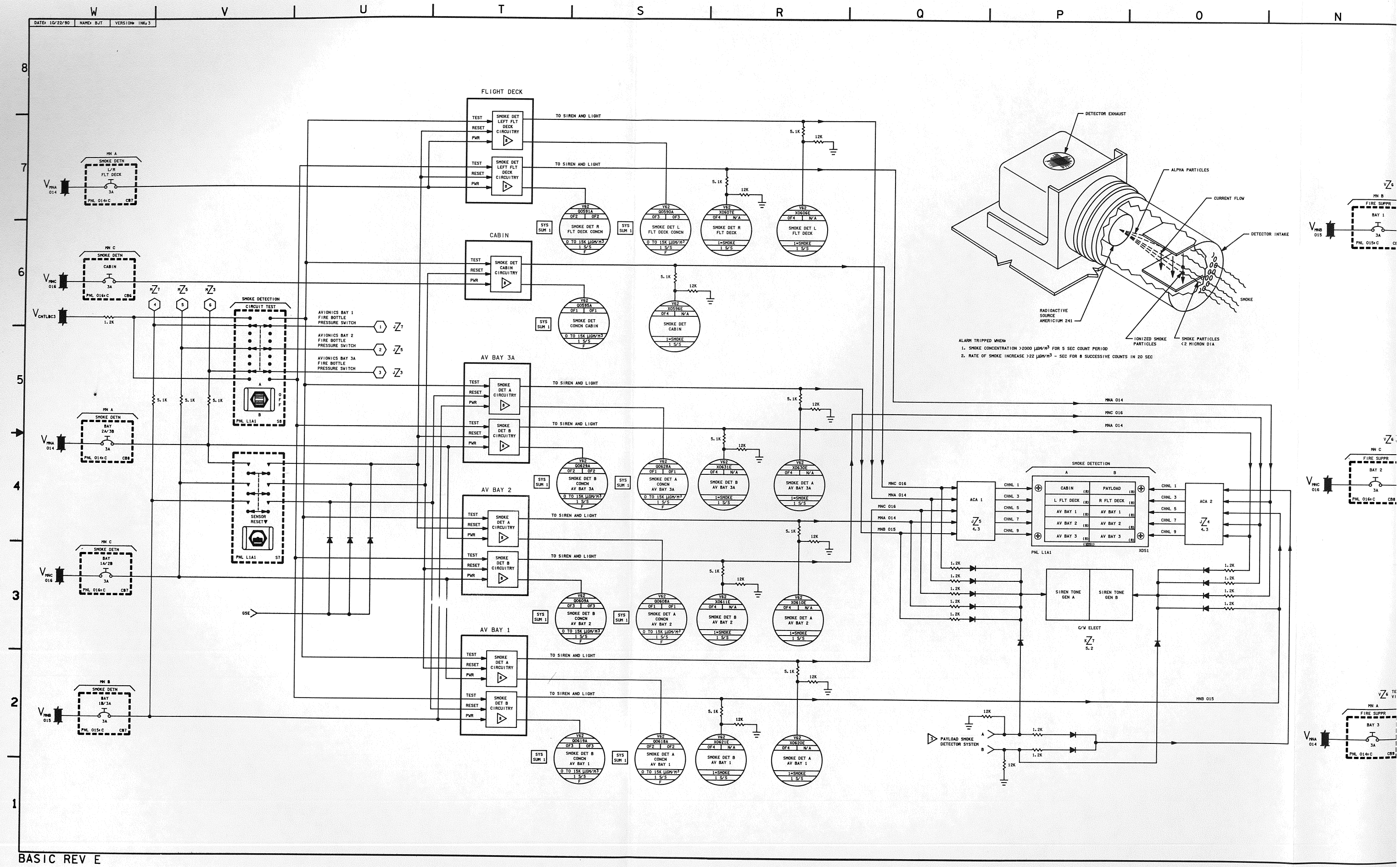

DATE: 10/22/90
NAME: BJT
VERSION: INK 3
FLIGHT DECK
CABIN
AV BAY 3A
AV BAY 2
AV BAY 1
SMOKE DETECTION
CIRCUIT TEST
SENSOR RESET
AVIONICS BAY 1 FIRE BOTTLE PRESSURE SWITCH
AVIONICS BAY 2 FIRE BOTTLE PRESSURE SWITCH
AVIONICS BAY 3A FIRE BOTTLE PRESSURE SWITCH
TO SIREN AND LIGHT
SMOKE DET LEFT FLT DECK CIRCUITRY
SMOKE DET CABIN CIRCUITRY
SMOKE DET A CIRCUITRY
SMOKE DET B CIRCUITRY
SMOKE DET R FLT DECK CONCN
SMOKE DET L FLT DECK CONCN
SMOKE DET R FLT DECK
SMOKE DET L FLT DECK
SMOKE DET CONCN CABIN
SMOKE DET CABIN
SMOKE DET B CONCN AV BAY 3A
SMOKE DET A CONCN AV BAY 3A
SMOKE DET B AV BAY 3A
SMOKE DET A AV BAY 3A
SMOKE DET B CONCN AV BAY 2
SMOKE DET A CONCN AV BAY 2
SMOKE DET B AV BAY 2
SMOKE DET A AV BAY 2
SMOKE DET B CONCN AV BAY 1
SMOKE DET A CONCN AV BAY 1
SMOKE DET B AV BAY 1
SMOKE DET A AV BAY 1
SMOKE DETECTION
ACA 1
ACA 2
CABIN
PAYLOAD
L FLT DECK
R FLT DECK
AV BAY 1
AV BAY 2
AV BAY 3
PNL L1A1
XDS1
SIREN TONE GEN A
SIREN TONE GEN B
C/W ELECT
PAYLOAD SMOKE DETECTOR SYSTEM
DETECTOR EXHAUST
ALPHA PARTICLES
CURRENT FLOW
DETECTOR INTAKE
SMOKE
RADIOACTIVE SOURCE AMERICIUM 241
IONIZED SMOKE PARTICLES
SMOKE PARTICLES <2 MICRON DIA
ALARM TRIPPED WHEN:
1. SMOKE CONCENTRATION >2000 µGM/M3 FOR 5 SEC COUNT PERIOD
2. RATE OF SMOKE INCREASE >22 µGM/M3 - SEC FOR 8 SUCCESSIVE COUNTS IN 20 SEC

BASIC REV E

DATE: 09/25/91	NAME: JMB	VERSION: BPT.7
DATE: 10/10/91	NAME: JDF	VERSION: INK.5
DATE: 09/01/93	NAME: VEM	VERSION: INK.6

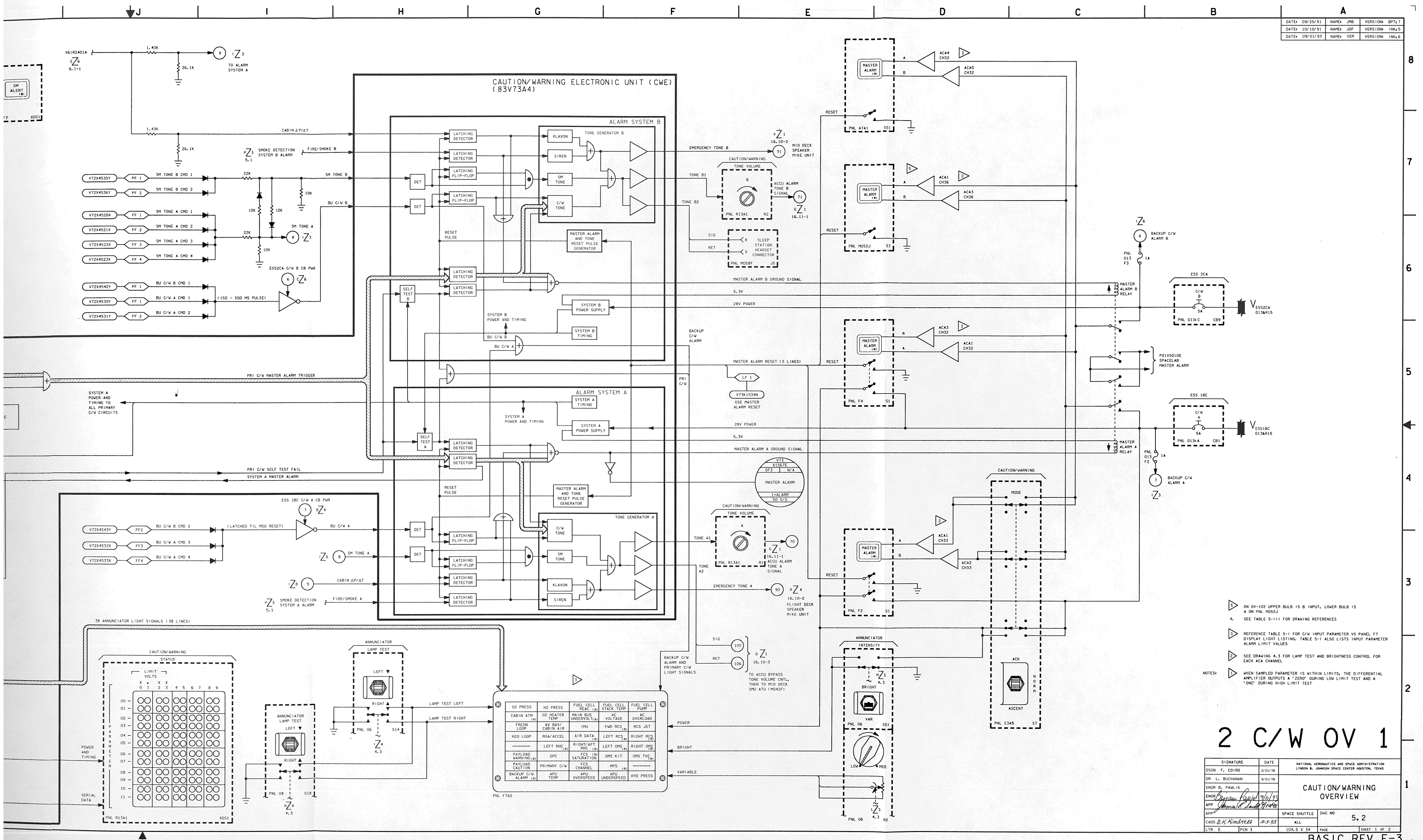

3. ON OV-102 UPPER BULB IS B INPUT, LOWER BULB IS A ON PNL M052J
4. SEE TABLE S-III FOR DRAWING REFERENCES
3. REFERENCE TABLE S-I FOR C/W INPUT PARAMETER VS PANEL F7 DISPLAY LIGHT LISTING. TABLE S-I ALSO LISTS INPUT PARAMETER ALARM LIMIT VALUES
2. SEE DRAWING 4.3 FOR LAMP TEST AND BRIGHTNESS CONTROL FOR EACH ACA CHANNEL

NOTES: 1. WHEN SAMPLED PARAMETER IS WITHIN LIMITS, THE DIFFERENTIAL AMPLIFIER OUTPUTS A "ZERO" DURING LOW LIMIT TEST AND A "ONE" DURING HIGH LIMIT TEST

2 C/W OV 1

SIGNATURE		DATE	NATIONAL AERONAUTICS AND SPACE ADMINISTRATION LYNDON B. JOHNSON SPACE CENTER HOUSTON, TEXAS
DSGN	F. COIRO	2/21/78	
DR	L. BUCHANAN	5/21/78	
ENGR	B. PAWLIK		CAUTION/WARNING OVERVIEW
ENGR		9/16/93	
APP		9/16/93	
APP			SPACE SHUTTLE — DWG NO 5.2
CADS	S.K. KINNEER	10-5-93	ALL
LTR E	PCN 3		104.5 X 34 — PAGE — SHEET 1 OF 2

BASIC REV E-3

DATE: 09/01/93 | NAME: VEM | VERSION: INK 6

S R O P O N M L K J I

8 7 6 5 4 3 2 1

CAUTION/WARNING
PARAMETER SELECT
0 1 0 1 2 3 4 5 6 7 8 9 0 1 2 3 4 5 6 7 8 9
DECIMAL TO BCD
PNL R13A1 S4

CAUTION/WARNING
LIMIT SET
VALUE
X X X
VOLTS
0 1 2 3 4 5 0 1 2 3 4 5 6 7 8 9 0 5
DECIMAL TO BCD
PNL R13A1 S6

▷

120 INPUT PARAMETERS

DWG	SHORT TITLE	(ZONE)
2.2-1	MN DC DIST	(D1)
2.3	AC	(F3, F4)
3.2-1	O_2 CRYO	(P4, E2)
3.3-1	H_2 CRYO	(N5)
3.4-1	FUEL CELL	(T5, V4, V8)
6.1-1	PCS	(C5)
6.2	ARS AIR	(D4)
7.1	1 ATCS	(E3)
7.4	ARS H_2O	(P7)
8.1	GPC I/O	(K3)
* 9.8	RGA/SIG	(C2)
* 9.11	ASA SIG	(A7)
* 9.13	OMS TVC&DR	(B7)
* 9.17	CNTLRS	(B8)
10.8	MPS HE	(C2)
10.11	LO_2	(P6)
10.12	LH_2	(P6)
11.3-2	OMS PROP	(U1, U2)
11.5-1	AFT RCS 1	(U1, U2)
11.6-1	FWD RCS 1	(U2)
* 11.10-3	RCS SIG	(A8)
12.1-2	APU	(D3, I4)
12.3-1	HYD PWR	(I4)
*	VIA DPS MDM FF1, FF3, PF2	

CAUTION/WARNING
PARAM
ENABLE ▼
INHIBIT ▲
PNL R13A1 S5

CAUTION/WARNING
LIMIT SET
LIMIT
UPPER
LOWER
PNL R13A1 S7

CAUTION/WARNING
LIMIT SET
FUNC
SET ▼
READ ▲
PNL R13A1 S8

CAUTION/WARNING
MEMORY
READ ▼
CLEAR ▲
PNL C3A5 S6

CAUTION/WARNING
MEMORY
READ ▼
CLEAR ▲
PNL R13A1 S2

PARAM STATUS
TRIPPED ▼
INHIBITED ▲
PNL R13A1 S1

LAMP TEST
LEFT ▼
RIGHT ▲
PNL R13A1 S3

PRIMARY C/W

ENABLE
INHIBIT
SIG DET
LOAD DATA$_{IN}$
DATA IN
INHIBIT MEMORY
DATA OUT
CLEAR
INVALID PARAMETER DETECTOR
>119
BCD TO BINARY
PARAMETER SELECT
DATA BIT 8
HIGH LIMIT TEST
SELF TEST LIMIT CONTROL (PARAM 120-127)
CWLM PROM
DATA BITS 1-7
UPPER LIMIT
CLEAR
BCD TO BINARY
DATA IN
LIMIT VALUE RAM
DATA OUT BIT 8
DATA OUT BITS 1-7
LOAD DATA AND SET BIT 8
LIMIT VALUE (7 BITS)
DIGITAL TO ANALOG
LIMIT VALUE
DIFF AMPL
OUT-OF-LIMIT COUNT CONTROL
DATA OUT
DATA IN
COUNT MEMORY
COUNT OVERFLOW MEMORY (SET IF COUNT=8, RESET IF COUNT=0)
DATA OUT
INHIBIT
SET
READ
TRIPPED
INHIBITED
LEFT
RIGHT
000
119
120
127
128 PARAM MUX
PARAMETER DATA (80 S/S)
8 SELF TEST PARAMETERS
LIMIT VALUE STORE AND ENCODE
LIMIT VALUE DATA
C/W STATUS ENABLE
LAMP TEST DATA GENERATOR
SYSTEM A MASTER ALARM
RECALL MEMORY
DATA IN
DATA OUT
CLEAR
MASTER ALARM TRIGGER MEMORY
DATA OUT
DATA IN
POWER UP RESET PULSE GENERATOR
SYSTEM A POWER AND TIMING TO ALL PRIMARY C/W CIRCUITS
PRI C/W SE
SYSTEM A HI
PARAMETERS 120-127 ALARM INHIBIT
PRIMARY C/W PARAM SELF TEST
SELF TEST FAIL
PRIMARY C/W SELF TEST PARAMETERS STATUS
LAMP SET
LAMP RESET
ANNUNCIATOR COMBINATION AND OUTPUT DRIVE
ANNUNCIATOR SELECT DATA
COMBINATION PROM
38 ANNUNCIATOR LIGHT SIGNALS (38 LINES)
CAUTION/WARNING
STATUS
LIMIT VOLTS
X X X X
0 1 2 3 4 5 6 7 8 9
PARAMETER
00 01 02 03 04 05 06 07 08 09 10 11
POWER AND TIMING
SERIAL DATA
PNL R13A1 XDS1

V61R2401A
E4 6.1-1
1.43K
26.1K
9 Z3
TO ALARM SYSTEM A
1.43K
26.1K
PZ3 SMOKE SYSTE 5.1

V72X4539Y PF 1 SM LIGHT B CMD 1
V72X4540Y PF 2 SM LIGHT B CMD 2
V72X4526X FF 1 SM LIGHT A CMD 1
V72X4527X FF 2 SM LIGHT A CMD 2
V72X4528X FF 3 SM LIGHT A CMD 3
V72X4529X FF 4 SM LIGHT A CMD 4
1.5K 1.5K
ACA 2 CH 29
ACA 3 CH 29
SM ALERT (B)
PNL F7 XDS1

V72X4535Y PF 1 SM TONE B CMD 1
V72X4536Y PF 2 SM TONE B CMD 2
V72X4520X FF 1 SM TONE A CMD 1
V72X4521X FF 2 SM TONE A CMD 2
V72X4522X FF 3 SM TONE A CMD 3
V72X4523X FF 4 SM TONE A CMD 4
22K 10K 22K 10K

V72X4542Y PF 1 BU C/W B CMD 1
V72X4530Y FF 1 BU C/W A CMD 1
V72X4531Y FF 2 BU C/W A CMD 2
(150 - 500 MS PULSE)

V72X4543Y PF2 BU C/W B CMD 2
V72X4532X FF3 BU C/W A CMD 3
V72X4533X FF4 BU C/W A CMD 4
(LATCHED TIL MSG RE

BASIC REV E-3

BASIC REV E-3

PRIMARY C/W

SYSTEM A MASTER ALARM

C/W STATUS ENABLE

LAMP TEST DATA GENERATOR

COMBINATION PROM

ANNUNCIATOR SELECT DATA

ANNUNCIATOR COMBINATION AND OUTPUT DRIVE

LAMP SET

LAMP RESET

MASTER ALARM TRIGGER MEMORY

DATA OUT

DATA IN

RECALL MEMORY

CLEAR

LIMIT VALUE DATA

LIMIT VALUE STORE AND ENCODE

8 SELF TEST PARAMETERS

PARAMETER DATA (80 S/S)

128 PARAM MUX

127

120

119

000

SIO DET

LEFT

RIGHT

INHIBITED

TRIPPED

READ

CLEAR

SET

PNL R1341

S1

S2

S3

S4

S5

S6

S7

S8

S9

LAMP TEST

LEFT

RIGHT

INHIBITED

PARAM STATUS

TRIPPED

MEMORY

READ

CLEAR

CAUTION/WARNING

PARAM

ENABLE

INHIBIT

LIMIT SET

UPPER

LOWER

DECIMAL TO BCD

VOLTS

VALUE

PARAMETER SELECT

120 INPUT PARAMETERS

DPS	SHORT TITLE	(ZONE)	
2.2-1	HV DC DIST	(D1)	
2.3	AC	(F3,F4)	
2.2-1	H2 GNVO	(P4,E2)	
2.3-1	O2 GNVO	(P4,E3)	
3.3-1	FUEL CELL	(T5,V4,V8)	
3.4-1	H2 GNVO	(N5)	
6.1-1	PCS	(C5)	
6.2	ARS AIR	(C4)	
7.1	1 ATCS	(E3)	
7.4	ARS H2O	(P2)	
8.1	QPC I/O	(K3)	
9.0	RCW/SIG	(C2)	
* 9.11	ASA SIG	(A7)	
* 9.13	OMS TVC&OB	(B7)	
* 9.17	CNTLRS	(B8)	
* 10.8	MPS HE	(E2)	
10.11	LO2	(P6)	
10.12	LH2	(P6)	
11.2-2	OMS POP	(U1,U2)	
11.5-1	AFT RCS 1	(U1,U2)	
11.6-1	FWD RCS 1	(U2)	
* 11.10-3	RCS SIG	(A8)	
12.1-2	APU	(D3,14)	
12.3-1	HYD PWR	(14)	
* V1A	DPS ROM FF1,FF2,PF2		

SM LIGHT A CMD 4
SM LIGHT A CMD 3
SM LIGHT A CMD 2
SM LIGHT A CMD 1
SM LIGHT B CMD 2
SM LIGHT B CMD 1

V72X4529X FF 4
V72X4528X FF 3
V72X4527X FF 2
V72X4526X FF 1
V72X4540Y PF 2
V72X4539Y PF 1

S R Q P O N M L

DATE 09/01/93 | NAME VEM | VERSION INK.6

1 2 3 4 5 6 7 8

DATE: 08/22/90	NAME: BJT	VERSION: INK 4
DATE: 08/27/91	NAME: JDF	VERSION: BPT 7
DATE: 10/10/91	NAME: JDF	VERSION: INK 5

MASTER ALARM TONE LOGIC B

MASTER ALARM TONE LOGIC A

TIMING TO TONE GENERATORS, PULSE GENERATORS, SELF TEST AND TIME DELAY CIRCUITS

KLAXON

EMERG ENABLE

KLAXON TONE GEN

SIREN

SIREN TONE GEN

SM TONE GEN

C/W TONE ENABLE

C/W TONE GEN

PRI C/W

PRI C/W TRIGGER

BU C/W TONE

BU C/W

TURN ON 0.1 SEC TD

TURN OFF 0.1 SEC TD

BU C/W LIGHT

SW TONE

ST FAIL 1

ST FAIL 2

TIMING SELF TEST COUNTERS AND COMPARE LOGIC

OSC FAIL

OSC A FAIL

OSC B FAIL

0.1 SEC TD

LTER AND HRESHOLD ETECTORS >2.525VDC FC 2.475VDC

LTER AND HRESHOLD ETECTORS >15V FC 7V

LTER AND HRESHOLD ETECTORS ON>2.5VDC OFF<2.0VDC

BU C/W LTER AND HRESHOLD ETECTOR ON<2.0VDC OFF>2.5VDC

PWR TO LOGIC CKTS 5VDC

POWER TO THRESHOLD DETECTORS MA AMPL, AND SIREN TONE GEN 15VDC -15VDC

5.3VDC

MASTER ALARM

GND SIG

ENABLE

TONE

TONE AMPL 1 (8Ω)

TONE AMPL 1 (300Ω)

TONE AMPL 2 (300Ω)

MAR>2.5VDC OFF<2.0VDC

FILTER AND THRESHOLD DET

MASTER ALARM RESET (MAR) PULSE GEN (=20μ SEC)

PWR READY

MAR PULSE

CROSSOVER MAR PULSE GENERATOR

RESET PULSE

5VDC

PRIMARY C/W

BKUP C/W

3K

10K

BACKUP C/W ALARM (8A)

NO CONN

PRIMARY C/W (7B)

2 LINES

38 ANNUNCIATOR SIGNAL LINES

ATOR DATA

AND FF CLOCK PULSE

MBINATION EMORY

T, 128 PARAM) (PROM)

READ

T8

ANNUNCIATOR FF SELECT MATRIX

SELF TEST

1A THRU 7A (7 LINES)

1B THRU 6B (6 LINES)

8B

1C THRU 8C (8 LINES)

1D THRU 8D (8 LINES)

1E THRU 8E (8 LINES)

TYPICAL CWE ANNUNCIATOR OUTPUT CIRCUIT (1 OF 38)

PUS

POWER SUPPLY B

POWER SUPPLY A

MASTER ALARM B RELAY SIG

MASTER ALARM A RELAY SIG

NO CONN

MA TLM ENABLE

EMERGENCY TONE B (91) MID DECK SPKR MIKE UNIT

EMERGENCY TONE A (90) FLT DECK SPKR MIKE UNIT

R 4 16.10-2

V 1 16.10-3

TONE B1

TONE A1

TONE B2

TONE A2

SLEEP STATION HEADSET CONNECTOR J5 PNL M058F

SIG RET

REMOTE MAR LF 1

V73K1539N

RETURN (106) SIGNAL (105)

Z 1 16.10-3 TO ACCU BYPASS TONE VOLUME CNTL, THEN TO MIDDECK SMU ATU (M042F)

MAR A1

MAR A2

MAR B1

MAR B2

CAUTION/WARNING TONE VOLUME B

PNL R13A1 R1 R2

(71) (70) Z 1 16.11-1 ACCU ALARM TONES

ANNUNCIATOR INTENSITY LOW MED PNL 06 Z 3 4.3 R2-1

ANNUNCIATOR INTENSITY BRIGHT VAR PNL 06 Z 3 4.3 S51

CAUTION/WARNING MODE ACK NORM ASCENT PNL C3A5 S7

ACA 2 CH 33 ACA 1 CH 33 ACA 1 CH 32 ACA 3 CH 32 ACA 3 CH 36 ACA 1 CH 36 ACA 5 CH 32 ACA 4 CH 32

MASTER ALARM (R) LOWER UPPER

PNL F2 S1 PNL F4 S1 PNL M052J S3 PNL A7A1 SS1

MASTER ALARM B LAMP SIG

MASTER ALARM A LAMP SIG

V73 X1567E GP3 W4 MASTER ALARM 1=ALARM 50 O/S

SYS B TIMING (4.096 MHZ OSC AND COUNTERS)

Z 5 TO SELF TEST CIRCUIT

POWER TO ANALOG MULTIPLEXER GATES, ANALOG AMPLIFIERS, COMPARATOR AND REF VOLTAGE GEN

NOT USED

PS B 15V

PS A 15V

PS B -15V

PS A -15V

PWR RDY B

PWR RDY A

PS B 5V

PS A 5V

5V (ISOL)

ISOLATION CIRCUIT

405.6 KHZ

SYS A TIMING Z 7

ENABLE

POWER UP STROBE

SINGLE PULSE GENERATOR (400 M SEC)

CLEARS ALL STORAGE REGISTERS, MEMORIES AND TRIGGERS PRIMARY C/W MASTER ALARM

TO SYS A TIMING N Z 8

POWER TO ALL LOGIC AND MEMORY CIRCUIT

N Z 1 TO STATUS DISPLAY 7.4VDC REG

POWER SUPPLY B

POWER SUPPLY A

<4.5V U/V DET

DC TO DC CONVERTER

15V -15V 5.3V 5V 12V 5V (ISOL)

FILTER

PS SHUTDOWN

OVERCURRENT DETECTOR

>5.5V >4.5 AMPS

PWR

ESS 2CA C/W B 5A PNL 013 C CB9 V_{ESS2CA} 013AR15

ESS 1BC C/W A 5A PNL 013 A CB1 V_{ESS1BC} 013AR15

K1B K1A

P01XS010E PAYLOAD MASTER ALARM

Z 6 AMPL PWR

PNL 013 F3 1A BU C/W B

PNL 013 F2 1A BU C/W A

CAUTION/WARNING STATUS DISPLAY (PANEL R13A1)

GATED 409.6 KHZ

RECIRCULATE DATA

DATA IN CLOCK DATA STORAGE SHIFT REGISTER (128 BITS) DO

CLR

DATA IN

CLOCK

COLUMN SHIFT REGISTER

LOAD

COLUMN STORAGE REGISTER AND GROUND DRIVERS

0 1 2 3 4 5 6 7 8 9

CLR SHIFT CLOCK

ROW SHIFT REGISTER AND VOLTAGE DRIVERS

0 1 2 3 4 5 6 7 8 9 10 11

CLK CT=9 DECADE COUNTER CT=10

RESET

ROW DATA

CT>109

XDS1

ANNUNCIATOR LAMP TEST LEFT RIGHT PNL 06 Z 3 4.3 S14

ANNUNCIATOR LAMP TEST LEFT RIGHT PNL 08 Z 3 4.3 S10

CAUTION/WARNING ANNUNCIATOR PANEL (F7)

REF SQ WAVE AC

6.5VDC LAMP PWR

6.5VDC LOGIC PWR

THRESHOLD REF

POWER SUPPLY PWR

MAX/PHASE SHIFT CMD

PHASE SHIFT CNTL

PHASE SHIFT MODULATOR

CNTL SQ WAVE AC

	NO	TITLE
1A YELLOW O_2 PRESS	0	O_2 TK 1 PRESS
	10	O_2 TK 2 PRESS
	20	O_2 TK 3 PRESS
	30	O_2 TK 4 PRESS
	40	O_2 TK 5 PRESS
2A RED CABIN ATM	4	CABIN PRESS
	14	SYS 1 O_2 FLOW
	24	SYS 2 O_2 FLOW
	34	O_2 PP A
	44	O_2 PP B
	54	SYS 1 GN_2 FLOW
	64	SYS 2 GN_2 FLOW
3A YELLOW FREON LOOP	106	FCL 1 FLOW
	107	FCL 1 EVAP OUT TEMP
	116	FCL 2 FLOW
	117	FCL 2 EVAP OUT TEMP
4A YELLOW H_2O LOOP	105	LOOP 1 H_2O PUMP PRESS
	115	LOOP 2 H_2O PUMP PRESS
5A YELLOW ———	113	SPARE
6A RED PAYLOAD WARNING	55	P/L WARNING 1
	65	P/L WARNING 2
	75	P/L WARNING 3
	85	P/L WARNING 4
	95	P/L WARNING 5
7A YELLOW PAYLOAD CAUTION	97	P/L CAUTION
8A RED BACKUP C/W ALARM		BACKUP C/W A
		BACKUP C/W B

	NO	TITLE
1B YELLOW H_2 PRESS	50	H_2 TK 1 PRESS
	60	H_2 TK 2 PRESS
	70	H_2 TK 3 PRESS
	80	H_2 TK 4 PRESS
	90	H_2 TK 5 PRESS
2B YELLOW O_2 HEATER TEMP	1	O_2 TK 1 HTR 1 TEMP
	11	O_2 TK 1 HTR 2 TEMP
	21	O_2 TK 2 HTR 1 TEMP
	31	O_2 TK 2 HTR 2 TEMP
	41	O_2 TK 3 HTR 1 TEMP
	51	O_2 TK 3 HTR 2 TEMP
	61	O_2 TK 4 HTR 1 TEMP
	71	O_2 TK 4 HTR 2 TEMP
	81	O_2 TK 5 HTR 1 TEMP
3B YELLOW AV BAY/ CABIN AIR	74	CABIN FAN ΔP
	84	AV BAY 1 OUT AIR TEMP
	94	AV BAY 2 OUT AIR TEMP
	104	AV BAY 3 OUT AIR TEMP
	114	CABIN HX AIR OUT TEMP
4B YELLOW RGA/ACCEL	93	RGA/ACCEL FAIL
5B RED LEFT RHC	100	LEFT RHC FAIL
6B YELLOW GPC	5	GPC 1 FAIL
	15	GPC 2 FAIL
	25	GPC 3 FAIL
	35	GPC 4 FAIL
	45	GPC 5 FAIL
7B YELLOW PRIMARY C/W		CWE SELF TEST FAIL
8B YELLOW APU TEMP	8	APU 1 EGT
	18	APU 2 EGT
	28	APU 3 EGT
	38	APU 1 LUBE OIL TEMP
	48	APU 2 LUBE OIL TEMP
	58	APU 3 LUBE OIL TEMP

	NO	TITLE
1C RED FUEL CELL REAC	2	FC 1 O_2 VLV CLOSED
	12	FC 1 H_2 VLV CLOSED
	22	FC 2 O_2 VLV CLOSED
	32	FC 2 H_2 VLV CLOSED
	42	FC 3 O_2 VLV CLOSED
	52	FC 3 H_2 VLV CLOSED
2C RED MAIN BUS UNDERVOLT	3	MAIN A BUS U/V
	13	MAIN B BUS U/V
	23	MAIN C BUS U/V
3C YELLOW IMU	103	IMU FAIL
4C RED AIR DATA	91	NAV SENSOR FAIL
5C RED RIGHT/AFT RHC	110	RIGHT/AFT RHC FAIL
6C RED FCS SATURATION	101	FCS SATURATION
7C YELLOW FCS CHANNEL	111	FCS CHAN BYPASS/FAIL
8C YELLOW APU OVERSPEED	68	APU 1 OVERSPEED
	78	APU 2 OVERSPEED
	88	APU 3 OVERSPEED

	NO	TITLE
1D YELLOW FUEL CELL STACK TEMP	62	FC 1 STACK TEMP
	72	FC 2 STACK TEMP
	82	FC 3 STACK TEMP
2D YELLOW AC VOLTAGE	33	AC 1 BUS O/V-U/V
	43	AC 2 BUS O/V-U/V
	53	AC 3 BUS O/V-U/V
3D RED FWD RCS	6	RCS-F OX TK ULL P
	16	RCS-F FU TK ULL P
	26	RCS-F LEAK/TK P
4D RED LEFT RCS	36	RCS-L OX TK ULL P
	46	RCS-L FU TK ULL P
	56	RCS-L LEAK/TK P
5D RED LEFT OMS	7	OMS-L OX TK ULL P
	17	OMS-L FU TK ULL P
	27	OMS-L ENG ABNORM
6D YELLOW OMS KIT	77	OMS PBX OX TK ULL P
	87	OMS PBX FU TK ULL P
7D RED MPS	9	MPS-C ENG He TK PRESS
	19	MPS-L ENG He TK PRESS
	29	MPS-R ENG He TK PRESS
	39	MPS-C ENG He REG PRESS
	49	MPS-L ENG He REG PRESS
	59	MPS-R ENG He REG PRESS
	69	MPS-LO_2 ENG MANF PRESS
	79	MPS-LH_2 ENG MANF PRESS
8D YELLOW APU UNDERSPEED	98	APU 1 UNDERSPEED
	108	APU 2 UNDERSPEED
	118	APU 3 UNDERSPEED

	NO	TITLE
1E YELLOW FUEL CELL PUMP	92	FC 1 PUMP ΔP LOW
	102	FC 2 PUMP ΔP LOW
	112	FC 3 PUMP ΔP LOW
2E YELLOW AC OVERLOAD	63	AC 1 BUS OVERLOAD
	73	AC 2 BUS OVERLOAD
	83	AC 3 BUS OVERLOAD
3E YELLOW RCS JET	96	RCS JET FAIL
4E RED RIGHT RCS	66	RCS-R OX TK ULL P
	76	RCS-R FU TK ULL P
	86	RCS-R LEAK/TK P
5E RED RIGHT OMS	37	OMS-R OX TK ULL P
	47	OMS-R FU TK ULL P
	57	OMS-R ENG ABNORM
6E RED OMS TVC	67	OMS TVC FAIL
7E YELLOW ———	89	SPARE
8E YELLOW HYD PRESS	99	HYD SYS 1 PRESS
	109	HYD SYS 2 PRESS
	119	HYD SYS 3 PRESS

A2 OV-105 ONLY

A3 ON OV-102, A INPUT IS LOWER BULB, B UPPER BULB ON PNL M052J

12. SEE TABLE 5-III FOR DRAWING REFERENCES

A1 THUMBWHEELS USE SAME GROUND WIRE. LIFTING GROUND WILL SELECT PARAMETER 000 AND LIMIT SET VALUE 0.00

A4 FLIGHT VARIABLE MEASUREMENT. UNUSED INPUTS ARE SHORTED.

A TYPICAL MASTER ALARM INDICATOR CIRCUIT AND ANNUNCIATOR CONTROL ASSEMBLY (ACA) DRIVER CIRCUIT. SEE DWG 4.3 FOR LAMP TEST AND BRIGHTNESS CONTROL FOR EACH ACA AND CHANNEL

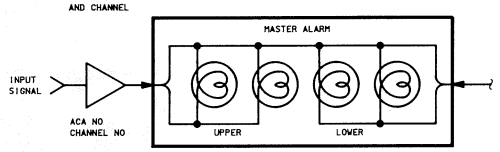

B TYPICAL C/W ANNUNCIATOR LAMP CIRCUIT

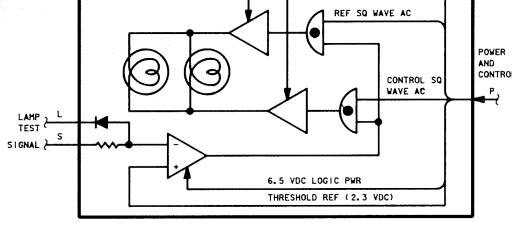

7. MULTIPLEXER COMPARATOR TRIP POINT VARIATION (35 TO 120° F)
SPEC - ±30 MILLIVOLTS
TEST - ±10 MILLIVOLTS

6. ABBREVIATIONS AND ACRONYMS

ACA - ANNUNCIATOR CONTROL ASSEMBLY
ACK - ACKNOWLEDGE
BU - BACKUP
CT - COUNT
CWE - CAUTION/WARNING ELECTRONICS
CWS - CAUT/WARNING STATUS
DET - DETECTION
DI - DATA IN
DO - DATA OUT
FF - FLIP FLOP (MULTIBRATOR)
MA - MASTER ALARM
MAR - MASTER ALARM RESET
MUX - MULTIPLEXER
NI OLI - NOT INHIBITED OUT OF LIMIT INDICATION
OLI - OUT OF LIMIT INDICATION
O/V - OVERVOLT
PROM - PROGRAMMABLE READ ONLY MEMORY
PS - POWER SUPPLY
RAM - RANDOM ACCESS MEMORY
R/W - READ/WRITE
ST - SELF TEST
U/V - UNDERVOLT

D SELF TEST PARAMETERS 1 THRU 4 ARE LOW LIMIT TESTED AT 0.10 VOLT BELOW PARAMETER VALUE. SELF TEST PARAMETERS 5 THRU 8 ARE HIGH LIMIT TESTED AT 0.10 VOLT ABOVE PARAMETER VALUE

4. TIMING PULSE Ø1 THRU Ø4 AND T1 THRU T9 ARE GENERATED BY SYSTEM A TIMING AS SHOWN IN ZONE P/A. THE NOTATION (T8) INDICATES A PHASE 3 (Ø3) PULSE IN TIME PERIOD 8 (T8). THE SYMBOLS (T8), (T8) AND (Ø3) REPRESENT TIMING SIGNALS FROM ZONE P8. THE SYMBOL (PUS) REPRESENTS A POWER UP STROBE PULSE GENERATOR SIGNAL FROM ZONE D/5

D PROM LIMITS ARE DETERMINED BY PLUG IN CAUTION/WARNING LIMITS MODULE (CWLM)LOCATED ON FRONT OF C/W ELECTRONICS BOX IN AVIONICS BAY 3A REFERENCE TABLE 5-I FOR A LISTING OF PROM LIMIT VALUES

D IF TRIGGERED, THE POWER SUPPLY (PS) SHUTDOWN SIGNAL WILL REMAIN LATCHED AS LONG AS INPUT POWER IS APPLIED

NOTES: 1. THIS DWG IS A SIMPLIFIED FUNCTIONAL REPRESENTATION OF THE ORBITER HARDWARE SYSTEM

2 C/W 2

SIGNATURE	DATE	NATIONAL AERONAUTICS AND SPACE ADMINISTRATION LYNDON B. JOHNSON SPACE CENTER HOUSTON, TEXAS
DSGN Laurie M. Buchanan	2-19-80	
DR		
ENGR B. PAWLIK		CAUTION/WARNING
ENGR	10-21-91	
APP	10/21/91	
APP		SPACE SHUTTLE
OMNIPLAN S.K. Kinkaid	10-23-91	ALL
LTR E PCN 1		126.5 X 34

DWG NO 5.2

PAGE SHEET 2 OF 2

BASIC REV E-1

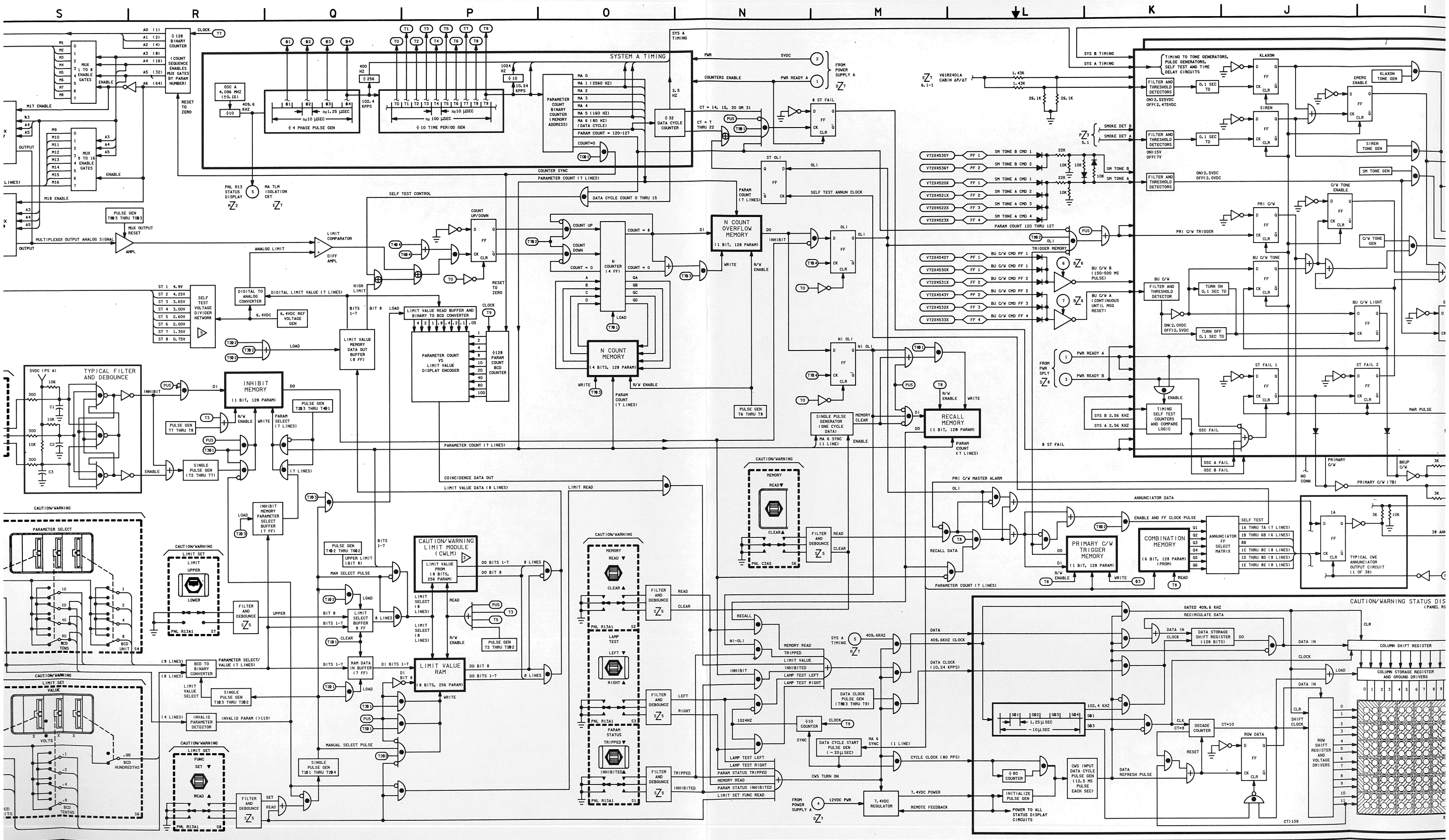

S
R
Q
P
O
N
M
L
K
J
SYSTEM A TIMING
÷128 BINARY COUNTER
MUX 1 TO 8 ENABLE GATES
MUX 9 TO 16 ENABLE GATES
÷4 PHASE PULSE GEN
÷10 TIME PERIOD GEN
PARAMETER COUNT BINARY COUNTER (MEMORY ADDRESS)
÷32 DATA CYCLE COUNTER
N COUNT OVERFLOW MEMORY (1 BIT, 128 PARAM)
N COUNT MEMORY (4 BITS, 128 PARAM)
N COUNTER (4 FF)
LIMIT VALUE MEMORY DATA OUT BUFFER (8 FF)
LIMIT VALUE READ BUFFER AND BINARY TO BCD CONVERTER
PARAMETER COUNT VS LIMIT VALUE DISPLAY ENCODER
÷128 PARAM COUNT BCD COUNTER
TYPICAL FILTER AND DEBOUNCE
INHIBIT MEMORY (1 BIT, 128 PARAM)
INHIBIT MEMORY PARAMETER SELECT BUFFER (7 FF)
CAUTION/WARNING LIMIT MODULE (CWLM)
LIMIT VALUE RAM (8 BITS, 256 PARAM)
LIMIT SELECT BUFFER 8 FF
RAM DATA IN BUFFER (7 FF)
BCD TO BINARY CONVERTER
INVALID PARAMETER DETECTOR
SELF TEST VOLTAGE DIVIDER NETWORK
DIGITAL TO ANALOG CONVERTER
LIMIT COMPARATOR
SINGLE PULSE GEN (T2 THRU T7)
PULSE GEN T7 THRU T8
PULSE GEN T203 THRU T401
PULSE GEN T402 THRU T602
PULSE GEN T2 THRU T202
PULSE GEN T101 THRU T204
PULSE GEN T6 THRU T8
PARAMETER COUNT (7 LINES)
COINCIDENCE DATA OUT
LIMIT VALUE DATA (8 LINES)
LIMIT READ
CAUTION/WARNING
PARAMETER SELECT
LIMIT SET
LIMIT VALUE
FILTER AND DEBOUNCE
MEMORY READ
LAMP TEST
PARAM STATUS
TRIPPED
INHIBITED
SINGLE PULSE GENERATOR (ONE CYCLE DATA)
RECALL MEMORY (1 BIT, 128 PARAM)
PRIMARY C/W TRIGGER MEMORY (1 BIT, 128 PARAM)
COMBINATION MEMORY (6 BIT, 128 PARAM) (PROM)
ANNUNCIATOR FF SELECT MATRIX
TYPICAL CWE ANNUNCIATOR OUTPUT CIRCUIT (1 OF 38)
CAUTION/WARNING STATUS DIS
DATA STORAGE SHIFT REGISTER (128 BITS)
COLUMN SHIFT REGISTER
COLUMN STORAGE REGISTER AND GROUND DRIVERS
ROW SHIFT REGISTER AND VOLTAGE DRIVERS
DECADE COUNTER
7.4VDC REGULATOR
POWER TO ALL STATUS DISPLAY CIRCUITS

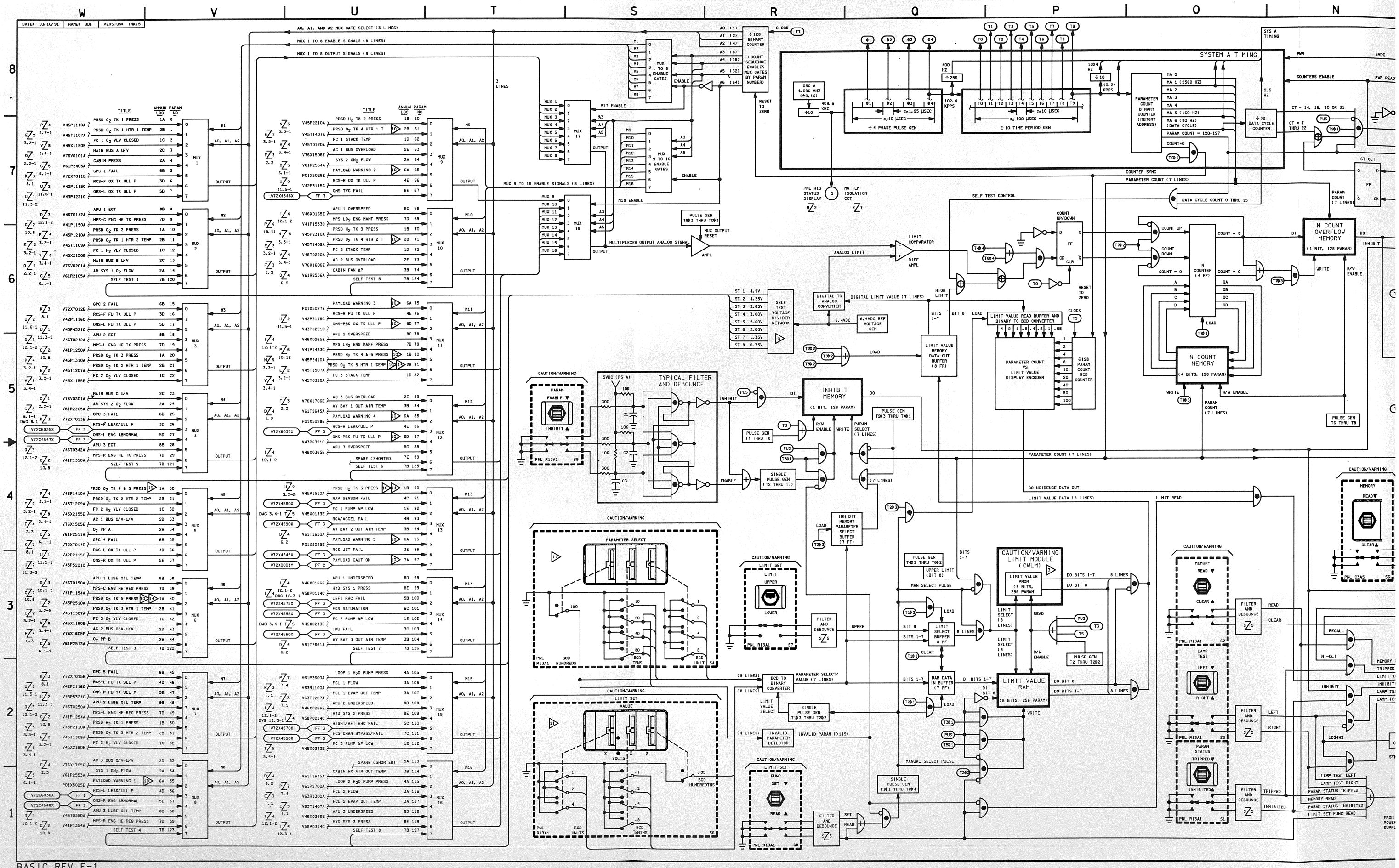

W
V
U
T
S
R
Q
P
O
N
8
7
6
5
4
3
2
1
SYSTEM A TIMING
÷ 128 BINARY COUNTER
(COUNT SEQUENCE ENABLES MUX GATES BY PARAM NUMBER)
MUX 1 TO 8 ENABLE GATES
MUX 9 TO 16 ENABLE GATES
MUX 1
MUX 2
MUX 3
MUX 4
MUX 5
MUX 6
MUX 7
MUX 8
MUX 9
MUX 10
MUX 11
MUX 12
MUX 13
MUX 14
MUX 15
MUX 16
MUX 17
MUX 18
PARAMETER COUNT BINARY COUNTER (MEMORY ADDRESS)
÷ 32 DATA CYCLE COUNTER
÷ 4 PHASE PULSE GEN
÷ 10 TIME PERIOD GEN
PARAM COUNT = 120-127
COUNTERS ENABLE
COUNTER SYNC
PARAMETER COUNT (7 LINES)
DATA CYCLE COUNT 0 THRU 15
SELF TEST CONTROL
N COUNT OVERFLOW MEMORY (1 BIT, 128 PARAM)
N COUNT MEMORY (4 BITS, 128 PARAM)
N COUNTER (4 FF)
LIMIT COMPARATOR
DIFF AMPL
ANALOG LIMIT
DIGITAL LIMIT VALUE (7 LINES)
DIGITAL TO ANALOG CONVERTER
6.4VDC REF VOLTAGE GEN
SELF TEST VOLTAGE DIVIDER NETWORK
LIMIT VALUE MEMORY DATA OUT BUFFER (8 FF)
LIMIT VALUE READ BUFFER AND BINARY TO BCD CONVERTER
PARAMETER COUNT VS LIMIT VALUE DISPLAY ENCODER
÷128 PARAM COUNT BCD COUNTER
INHIBIT MEMORY (1 BIT, 128 PARAM)
PULSE GEN T203 THRU T401
PULSE GEN T7 THRU T8
SINGLE PULSE GEN (T2 THRU T7)
TYPICAL FILTER AND DEBOUNCE
CAUTION/WARNING
PARAMETER SELECT
LIMIT SET
VALUE
FUNC
SET
READ
INHIBIT MEMORY PARAMETER SELECT BUFFER (7 FF)
CAUTION/WARNING LIMIT MODULE (CWLM)
LIMIT VALUE PROM (8 BITS, 256 PARAM)
LIMIT VALUE RAM (8 BITS, 256 PARAM)
LIMIT SELECT BUFFER 8 FF
RAM DATA IN BUFFER (7 FF)
BCD TO BINARY CONVERTER
INVALID PARAMETER DETECTOR
INVALID PARAM (>119)
MANUAL SELECT PULSE
SINGLE PULSE GEN T101 THRU T204
PARAM STATUS TRIPPED
MEMORY READ
PARAM STATUS INHIBITED
LIMIT SET FUNC READ

BASIC REV E-1

DATE: 10/10/90	NAME: LAM	VERSION: BPT.4
DATE: 10/17/90	NAME: BJT	VERSION: INK.5
DATE: 11/01/90	NAME: LAM	VERSION: INK.6

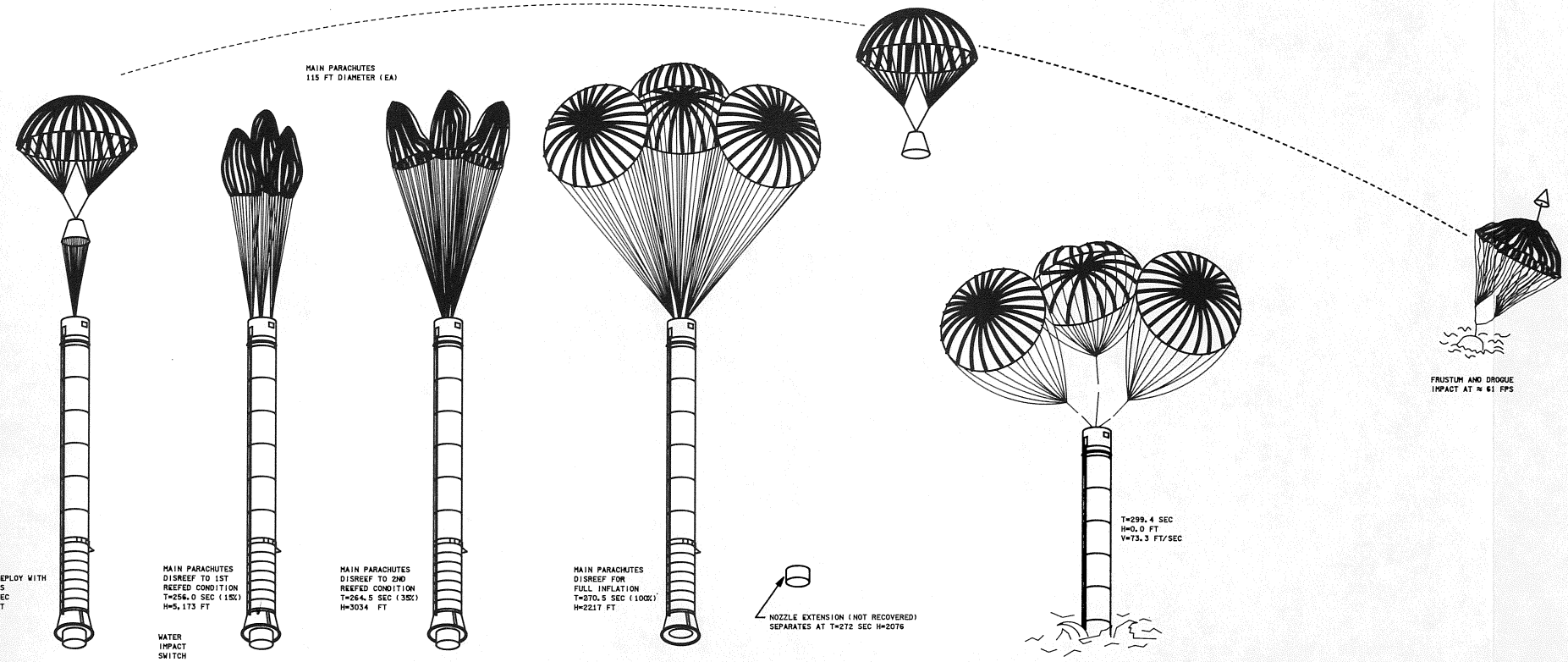

MAIN PARACHUTE DISCONNECT SYSTEM

SE SYSTEM

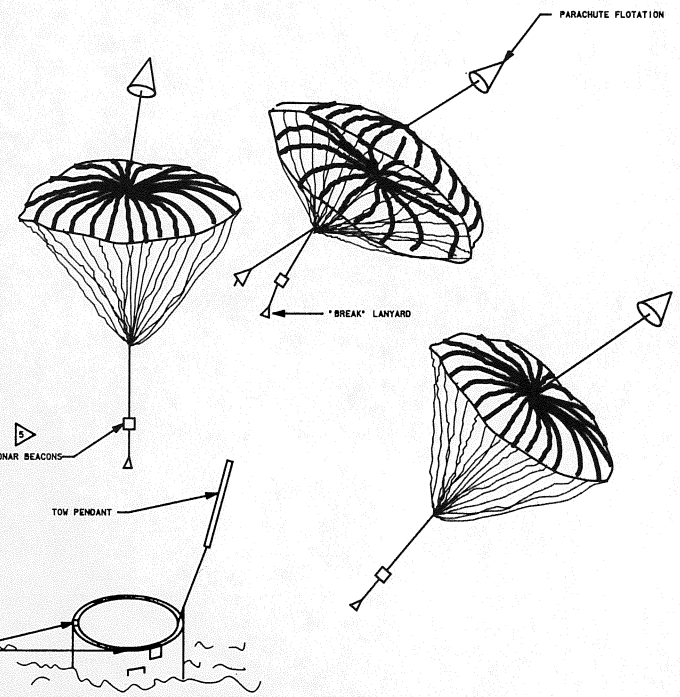

SRB TOW PENDANT

DEPLOYMENT AT SPLASHDOWN
TOW PENDANT FLOATS ON SURFACE

8. ALL TIMES AND ALTITUDES ARE 'TYPICAL' MISSION PERFORMANCE FROM FLIGHT DATA

7. SEE TABLE 5-III FOR DRAWING REFERENCES

▷ SONAR BEACONS (2) ARE SALT WATER ACTIVATED IF SRB'S SUBMERGE
OPERATING FREQUENCIES: ONE AT 10 KHZ
OTHER AT 35 KHZ

▷ MAIN PARACHUTE RECOVERY ACCOMPLISHED BY MEANS OF SALT WATER ACTIVATED SONAR BEACONS.
ONE BEACON PER PARACHUTE. OPERATING FREQ= 10 KHZ

▷ DELETED

▷ RF BEACON
RF POWER OUTPUT .5 WATTS
VSWR 2:1

▷ FLASHING LIGHT ASSEMBLY
FLASH RATE 70/90 FLASHES/MIN
FLASH INTENSITY TBD CANDLE PWR/SEC
LIGHT ACTIVATED AT DUSK, OFF AT DAWN

NOTES: 1. LH SRB SHOWN, RH SRB IDENTICAL

4 SRB REC

SIGNATURE		DATE	NATIONAL AERONAUTICS AND SPACE ADMINISTRATION LYNDON B. JOHNSON SPACE CENTER HOUSTON, TEXAS
DSGN	L. M. BUCHANAN	6/13/79	
DR			
ENGR			SOLID ROCKET BOOSTER RECOVERY
ENGR	D. Kendall	11-9-90	
APP	R. W. Bryce	11-9-90	
APP			SPACE SHUTTLE / DWG NO APP 5.4
OWNIPLAN	S. K. Kimbler	11-14-90	ALL
LTR E	PCN		121 X 34 PAGE SHEET 1 OF 1

BASIC REV E

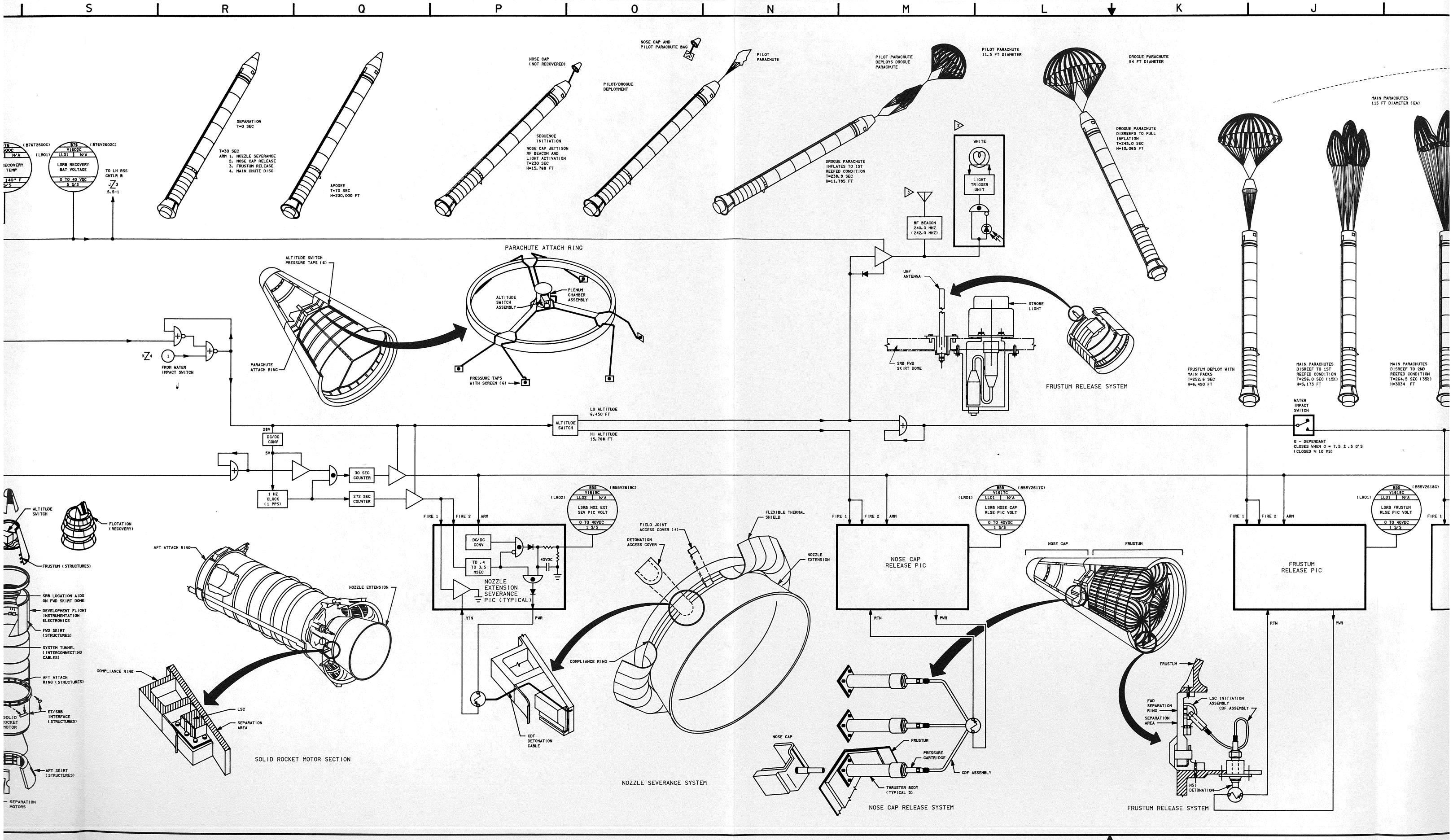

S
R
Q
P
O
N
M
L
K
J
SEPARATION T=0 SEC
T=30 SEC ARM 1. NOZZLE SEVERANCE 2. NOSE CAP RELEASE 3. FRUSTUM RELEASE 4. MAIN CHUTE DISC
APOGEE T=70 SEC H=230,000 FT
NOSE CAP (NOT RECOVERED)
SEQUENCE INITIATION
NOSE CAP JETTISON RF BEACON AND LIGHT ACTIVATION T=230 SEC H=15,768 FT
PILOT/DROGUE DEPLOYMENT
NOSE CAP AND PILOT PARACHUTE BAG
PILOT PARACHUTE
PILOT PARACHUTE DEPLOYS DROGUE PARACHUTE
DROGUE PARACHUTE INFLATES TO 1ST REEFED CONDITION T=238.9 SEC H=11,785 FT
PILOT PARACHUTE 11.5 FT DIAMETER
DROGUE PARACHUTE 54 FT DIAMETER
DROGUE PARACHUTE DISREEFS TO FULL INFLATION T=243.0 SEC H=10,065 FT
MAIN PARACHUTES 115 FT DIAMETER (EA)
FRUSTUM DEPLOY WITH MAIN PACKS T=252.6 SEC H=6,450 FT
MAIN PARACHUTES DISREEF TO 1ST REEFED CONDITION T=256.0 SEC (15%) H=5,173 FT
MAIN PARACHUTES DISREEF TO 2ND REEFED CONDITION T=264.5 SEC (35%) H=3034 FT
WHITE
LIGHT TRIGGER UNIT
RF BEACON 240.0 MHZ (242.0 MHZ)
UHF ANTENNA
STROBE LIGHT
SRB FWD SKIRT DOME
FRUSTUM RELEASE SYSTEM
PARACHUTE ATTACH RING
ALTITUDE SWITCH PRESSURE TAPS (6)
ALTITUDE SWITCH ASSEMBLY
PLENUM CHAMBER ASSEMBLY
PRESSURE TAPS WITH SCREEN (6)
FROM WATER IMPACT SWITCH
LO ALTITUDE 6,450 FT
HI ALTITUDE 15,768 FT
ALTITUDE SWITCH
WATER IMPACT SWITCH
G - DEPENDANT CLOSES WHEN G = 7.5 ± .5 G'S (CLOSED ≈ 10 MS)
28V
DC/DC CONV
5V
30 SEC COUNTER
272 SEC COUNTER
1 HZ CLOCK (1 PPS)
FIRE 1
FIRE 2
ARM
RTN
PWR
DC/DC CONV
TD .4 TO 3.5 MSEC
40VDC
NOZZLE EXTENSION SEVERANCE PIC (TYPICAL)
LSRB NOZ EXT SEV PIC VOLT
LSRB NOSE CAP RLSE PIC VOLT
LSRB FRUSTUM RLSE PIC VOLT
NOSE CAP RELEASE PIC
FRUSTUM RELEASE PIC
NOSE CAP
FRUSTUM
FLEXIBLE THERMAL SHIELD
FIELD JOINT ACCESS COVER (4)
DETONATION ACCESS COVER
NOZZLE EXTENSION
COMPLIANCE RING
CDF DETONATION CABLE
NOZZLE SEVERANCE SYSTEM
PRESSURE CARTRIDGE
CDF ASSEMBLY
THRUSTER BODY (TYPICAL 3)
NOSE CAP RELEASE SYSTEM
FWD SEPARATION RING
SEPARATION AREA
LSC INITIATION ASSEMBLY
CDF ASSEMBLY
NSI DETONATION
FRUSTUM RELEASE SYSTEM
ALTITUDE SWITCH
FLOTATION (RECOVERY)
FRUSTUM (STRUCTURES)
SRB LOCATION AIDS ON FWD SKIRT DOME
DEVELOPMENT FLIGHT INSTRUMENTATION ELECTRONICS
FWD SKIRT (STRUCTURES)
SYSTEM TUNNEL (INTERCONNECTING CABLES)
AFT ATTACH RING (STRUCTURES)
ET/SRB INTERFACE (STRUCTURES)
AFT SKIRT (STRUCTURES)
SEPARATION MOTORS
AFT ATTACH RING
NOZZLE EXTENSION
COMPLIANCE RING
LSC
SEPARATION AREA
SOLID ROCKET MOTOR SECTION

DATE: 11/01/90 | NAME: LAM | VERSION: INK6

ORBITER | ET | LSRB

V U T S R Q P O N

8 7 6 5 4 3 2 1

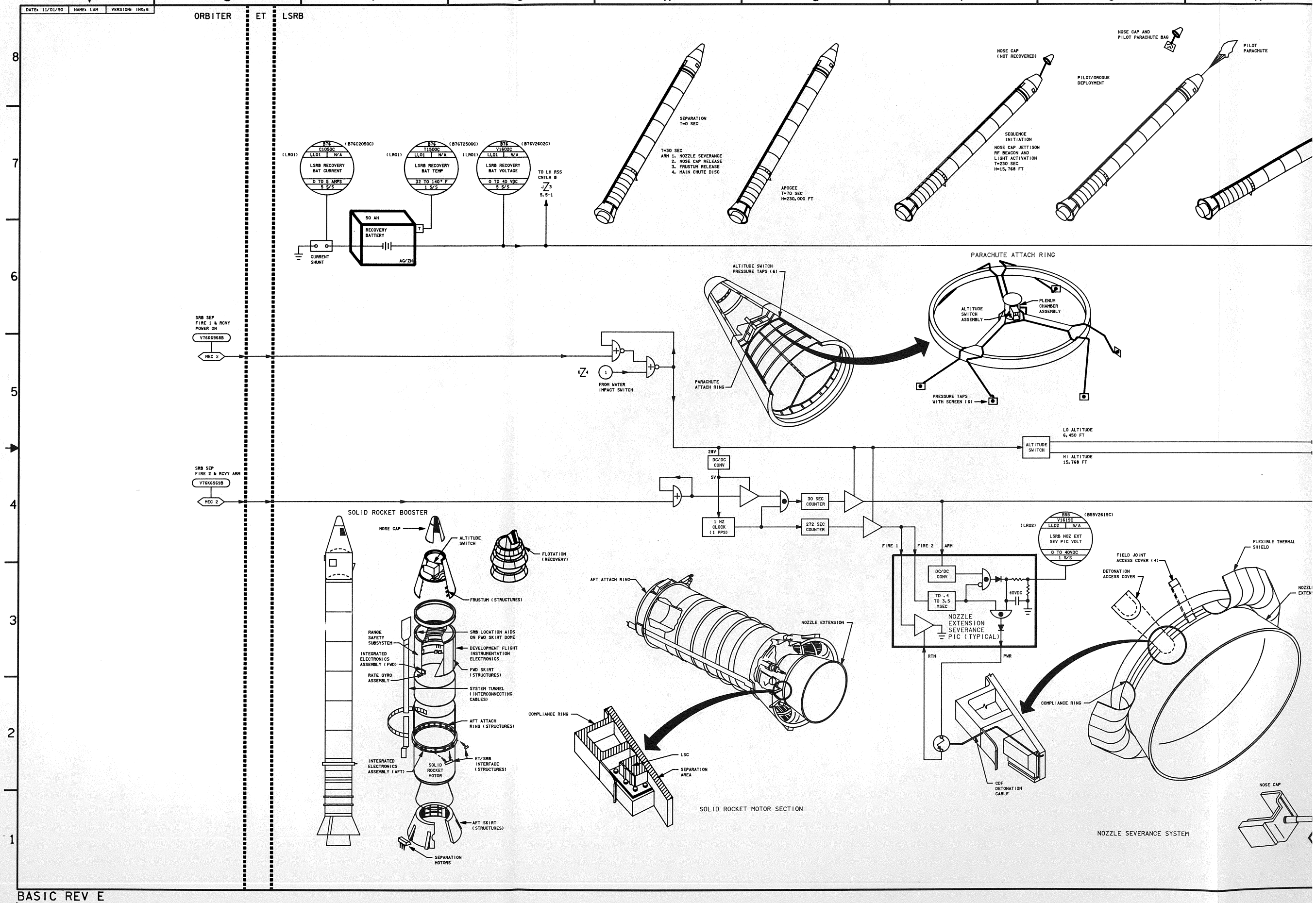

BASIC REV E

A		
DATE: 11/08/88	NAME: JOF	VERSION: INK, T
DATE: 10/06/90	NAME: CAR	VERSION: BPT, 6
DATE: 10/12/90	NAME: MFB	VERSION: INK, T

RH SRB RSS DISTRIBUTOR

RH RSS CONTROLLER A

RH RSS CONTROLLER B

LH SRB RSS DISTRIBUTOR

LH RSS CONTROLLER A

LH RSS CONTROLLER B

RSS BAT NO 1 — SHUNT — 50AH — VOLT REG — POWER LATCHING SWITCH — ARM LATCHING SWITCH — FIRE LATCHING SWITCH — TIME DELAY 30 ± 10 MS — *ARM* — +FIRE — FIRE 2 — FIRE 1

FIRING CIRCUIT — DC/DC CONV — CAP BANK 680 MF — SW DRIVER — FIRE (2) SW — FIRE (1) SW — BITE CIRCUIT — CKT — SW

SAFE (1) SWITCH — SAFE (2) SWITCH — ARM SWITCH

$V_{MNA/C}$ RH SRB — $V_{MNA/C}$ LH SRB

RSS S & A DEVICE — SAFED — ARMED

PYRO OUTPUT — PYRO OUTPUT RTN

MANUAL SAFING AND LOCKING PIN — SAFE — ARM — MOTOR — NSD — SLIDING SURFACE — PYRO CHARGE — FLAME TUNNEL FROM NSI — CDF MANIFOLD

RH SRB — LH SRB — LINEAR SHAPED CHARGE ASSEMBLY

GSE RSS RTST CMD — RTST CMD RET — +5VDC

FROM RH SRB RCVY BAT DWG 5.4 — FROM LH SRB RCVY BAT DWG 5.4

B55 X2870X — RH SRB RSS S AND A ARMED — 1=ARMED — 5 S/S

B55 X2869X — RH SRB RSS S AND A SAFED — 1=SAFED — 5 S/S

B55 X2867X — RH RSS PIC A FIRED — 1=FIRED — 25 S/S

B55 X2865X — RH RSS PIC A ARMED — 1=ARMED — 25 S/S

B55 V2823C — RH SRB VOLT RSS PIC A — 0 TO 40VDC — 5 S/S

B55 X2866X — RH RSS PIC B ARMED — 1=ARMED — 25 S/S

B55 X2873X — RH RSS PIC A RTST OK — 1=GO — 5 S/S

B55 X2875X — RH RSS PIC A L/T OK — 1=GO — 5 S/S

B55 V2824C — RH SRB VOLT RSS PIC B — 0 TO 40VDC — 5 S/S

B55 X2868X — RH RSS PIC B FIRED — 1=FIRED — 25 S/S

B55 X2874X — RH RSS PIC B RTST OK — 1=GO — 5 S/S

B55 X2876X — RH RSS PIC B L/T OK — 1=GO — 5 S/S

B55 X1865X — LH RSS PIC A ARMED — 1=ARMED — 25 S/S

B55 X1867X — LH RSS PIC A FIRED — 1=FIRED — 25 S/S

B55 V1623C — LH SRB VOLT RSS PIC A — 0 TO 40VDC — 5 S/S

B55 X1866X — LH RSS PIC B ARMED — 1=ARMED — 25 S/S

B55 X1873X — LH RSS PIC A RTST OK — 1=GO — 5 S/S

B55 X1875X — LH RSS PIC A L/T OK — 1=GO — 5 S/S

B55 V1624C — LH SRB VOLT RSS PIC B — 0 TO 40VDC — 5 S/S

B55 X1868X — LH RSS PIC B FIRED — 1=FIRED — 25 S/S

B55 X1876X — LH RSS PIC B L/T OK — 1=GO — 5 S/S

B55 X1874X — LH RSS PIC B RTST OK — 1=GO — 5 S/S

B55 X1870X — LH SRB RSS S AND A ARMED — 1=ARMED — 5 S/S

B55 X1869X — LH SRB RSS S AND A SAFED — 1=SAFED — 5 S/S

6. NSI - NASA STANDARD INITIATOR
AH - AMP HOURS
NSD - NASA STANDARD DETONATORS
LIT - LOAD TEST
RTST - RESISTANCE TEST

1. THE 30 MS TIME DELAY ENSURES ENOUGH TIME FOR CROSS STRAPPING BETWEEN DEVICES ONCE A FIRE COMMAND IS ISSUED

2. CAPACITIVE BANK WILL CHARGE UP TO 38 VDC WITHIN 1.2 SEC

3. PIC RESISTANCE TEST REQUIRES AN INPUT COMMAND TO TEST THE RESISTANCE OF THE INITIATOR. WHEN RESISTANCE MEETS REQUIREMENTS, A 5 VOLT DISCRETE IS OUTPUT TO TELEMETRY. THIS CIRCUIT IS USED IN A PRELAUNCH SEQUENCE FOLLOWING ELECTRICAL CONNECTION TO LIVE NSD'S TO VERIFY OPERATION READINESS

4. LOAD TEST OK CIRCUIT SENSES THE CAPACITOR DISCHARGE WAVEFORM. WHEN SUFFICIENT ENERGY IS STORED IN CAP BANK, LOAD TEST BITE GENERATES A 5 VOLT DISCRETE TO TELEMETRY. THIS IS A CHECKOUT FEATURE AND USED WITH NSD ONE OHM SIMULATORS TO VERIFY FIRING ENERGY

NOTES: 1. SEE TABLE S-III FOR DRAWING REFERENCES

5 RSS 1

SIGNATURE		DATE
DSGN VICKI S. DOOGETT		12/6/78
DR VICKI S. DOOGETT		12/6/78
ENGR D. RANDALL		
ENGR D. L. Randall		10/15/90
APP Paul M. Mayo		10/16/90
APP		
OMNIPLAN S.F. Kimbrew		11-14-90
LTR E	PCN	

NATIONAL AERONAUTICS AND SPACE ADMINISTRATION
LYNDON B. JOHNSON SPACE CENTER HOUSTON, TEXAS

SRB/ET RANGE SAFETY SYSTEM

SPACE SHUTTLE — DWG NO 5.5

ALL

126.5 X 34 — PAGE — SHEET 1 OF 2

BASIC REV E

S R Q P O N M L K J

ET RSS DISTRIBUTOR

ET CONTROLLER A

ET RSS BAT NO 1 — 18AH — SHUNT — VOLTAGE REG

POWER LATCHING SWITCH

CURRENT LIMITER

"ARM" LATCHING DRIVER

GSE INHIBIT/ RESET

100 MS PULSER

"FIRE" LATCHING DRIVER

30 ± 10MS TIME DELAY

+FIRE

FIRE 2

FIRE 1

SW DRIVER

SW DRIVER

FIRING CIRCUIT PIC A

DC/DC CONVERTER

ARM

CAP BANK 680 MF

CKT

BITE CIRCUIT

SAFE (1) SWITCH

SAFE (2) SWITCH

ARM SWITCH

T55 C10775A 0A03 0A3 — ET RSS BAT 1 CUR IND — 0 TO 5 AMPS — 5 S/S

T55 V1735A 0A03 0A3 — ET RSS BAT 1 VOLT — 0 TO 40VDC — 5 S/S

GSE PWR ON

GSE PWR INHIBIT

PWR TO ET IRD — Z 3 5.5 SHT 2

ET DCDR ARM — Z 4 5.5 SHT 2

T55 X1931E 0A02 0A2 — ET RSS ARM — 1=ARM — 25 S/S

ET DCDR FIRE — Z 4 5.5 SHT 2

+5VDC

GSE RSS RTST CMD

GSE RSS RTST CMD RET

T55 X1933E 0A02 0A2 — ET RSS FIRE — 1=FIRE — 25 S/S

GSE SAFE 1 (FROM LH SRB)

GSE SAFE 2 (FROM LH SRB)

GSE ARM (FROM LH SRB)

T55 C1076A 0A03 0A3 — ET RSS BAT 2 CUR IND — 0 TO 5 AMPS — 5 S/S

T55 V1736A 0A03 0A3 — ET RSS BAT 2 VOLT — 0 TO 40VDC — 5 S/S

GSE PWR ON

GSE PWR INHIBIT

ET CONTROLLER B

ET RSS BAT NO 2 — 18AH — SHUNT — VOLTAGE REG

POWER LATCHING SWITCH

CURRENT LIMITER

"ARM" LATCHING DRIVER

GSE INHIBIT/ RESET

100 MS PULSER

"FIRE" LATCHING DRIVER

30 ± 10MS TIME DELAY

+FIRE

FIRE 2

FIRE 1

SW DRIVER

SW DRIVER

FIRING CIRCUIT PIC B

DC/DC CONVERTER

ARM

CAP BANK 680 MF

CKT

BITE CIRCUIT

ET DCDR ARM — Z 4 5.5 SHT 2

ET DCDR FIRE — Z 4 5.5 SHT 2

+5VDC

GSE RSS RTST CMD

GSE RSS RTST CMD RET

ARM LIGHT

PNL F6AB XDS3

RNG SAF ARM

ACA 1 — 35

ACA 2 — 39

ACA 3 — 39

ACA 1 — 39

M Z 4 4.3

M Z 5 4.3

M Z 5 4.3

M Z 4 4.3

B55 C2051C LR01 N/A — RH RSS BAT 1 CURR — 0 TO 5 AMPS — 5 S/S

SAFE 1 — MEC 2 — SAFE 2 — MEC 1 — GSE — GSE — GSE ARM (B55K4044K) — (B55K451TE) — (B55K3518E)

PWR TO RH IRD A — Z 2 5.5 SHT 2

B55 Y2625C LR01 N/A — RH SRB BAT NO 1 VOLT — 0 TO 40VDC — 5 S/S

OFF — MEC 1 — GSE — GSE PWR ON — (B55K4515E)

RH DCDR A ARM — Z 2 5.5 SHT 2

RH DCDR A FIRE — Z 2 5.5 SHT 2

GSE RSS RTST CMD

GSE RSS RTST CMD RET

+5VDC

PWR TO RH IRD B — Z 1 5.5 SHT 2

B55 X2879X LR01 N/A — RH SRB RSS A FIRE — 1=DEST — 25 S/S

B55 X2877X LR01 N/A — RH SRB RSS A ARM — 1=ARM — 25 S/S

OFF — MEC 2 — GSE — GSE PWR ON — (B55K4516E)

RH DCDR B ARM — Z 1 5.5 SHT 2

RH DCDR B FIRE — Z 1 5.5 SHT 2

GSE RSS RTST CMD

GSE RSS RTST CMD RET

+5VDC

B55 X2880X LR01 N/A — RH SRB RSS B FIRE — 1=DEST — 25 S/S

B55 X2878X LR01 N/A — RH SRB RSS B ARM — 1=ARM — 25 S/S

B55 C1051C LL01 N/A — LH RSS BAT NO 1 CURR — 0 TO 5 AMPS — 5 S/S

PWR TO LH IRD A — C Z 8 5.5 SHT 2

B55 V1625C LL01 N/A — LH SRB BAT NO 1 VOLT — 0 TO 40VDC — 5 S/S

OFF — MEC 1 — GSE — GSE PWR ON — (B55K3515E)

LH DCDR A ARM — C Z 7 5.5 SHT 2

LH DCDR A FIRE — C Z 7 5.5 SHT 2

GSE RSS RTST CMD

GSE RSS RTST CMD RET

+5VDC

PWR TO LH IRD B — I Z 5 5.5 SHT 2

B55 X1879X LL01 N/A — LH SRB RSS A FIRE — 1=DEST — 25 S/S

B55 X1877X LL01 N/A — LH SRB RSS A ARM — 1=ARM — 25 S/S

OFF — MEC 2 — GSE — GSE PWR ON — (B55K3516E)

LH DCDR B ARM — I Z 6 5.5 SHT 2

LH DCDR B FIRE — I Z 6 5.5 SHT 2

GSE RSS RTST CMD

GSE RSS RTST CMD RET

+5VDC

B55 X1880X LL01 N/A — LH SRB RSS B FIRE — 1=DEST — 25 S/S

B55 X1878X LL01 N/A — LH SRB RSS B ARM — 1=ARM — 25 S/S

SAFE 1 — MEC 1 — MEC 2 — SAFE 2 — GSE — GSE — GSE ARM (B55K3044K) — (B55K3517E) — (B55K4518E)

RSS BAT NO 1 — SHUNT — 50AH — VOLT REG — POWER LATCHING SWITCH — ARM LATCHING SWITCH — FIRE LATCHING SWITCH — FIRE

FROM RH SRB RCVY BAT DWG 5.4

POWER LATCHING SWITCH — ARM LATCHING SWITCH — FIRE LATCHING SWITCH — FIRE

RSS BAT NO 1 — SHUNT — 50AH — FILTER — POWER LATCHING SWITCH — ARM LATCHING SWITCH — FIRE LATCHING SWITCH — FIRE

FROM LH SRB RCVY BAT — U Z 7 5.4

POWER LATCHING SWITCH — ARM LATCHING SWITCH — FIRE LATCHING SWITCH — FIRE

DATE: 10/12/90 | NAME: MFB | VERSION: INK# 7

W V U T S R Q P O N

8 7 6 5 4 3 2 1

LINEAR SHAPED CHARGE ASSEMBLY

LINEAR SHAPED CHARGE

LO_2 TANK

CDF MANIFOLD

CDF MANIFOLD

LH_2 TANK

LINEAR SHAPED CHARGE

LINEAR SHAPED CHARGE ASSEMBLY

T55 X1883X LL01 N/A — ET RSS PIC A RTST OK — 1=GO — 5 S/S

T55 X1884X LL01 N/A — ET RSS PIC A L/T OK — 1=GO — 5 S/S

T55 X1867X LL01 N/A — ET PIC A FIRED — 1=FIRED — 5 S/S

T55 V1730A OA03 OA3 — ET RSS VOLT PIC CAP A — 0 TO 40VDC — 5 S/S

PYRO OUTPUT

PYRO OUTPUT RTN

SLIDING SURFACE

MANUAL SAFING AND LOCKING PIN

NSD

NSD

PYRO CHARGE

FLAME TUNNEL FROM NSI

ARM

SAFE

MOTOR

SAFED

ARMED

RSS S & A DEVICE

T55 X1869X LL01 N/A — ET RSS S AND A SAFE — 1=SAFE — 5 S/S

T55 X1870X LL01 N/A — ET RSS S AND A ARM — 1=ARM — 5 S/S

T55 X2868X LR01 N/A — ET PIC B FIRED — 1=FIRED — 5 S/S

T55 V1731A OA03 OA3 — ET RSS VOLT PIC CAP B — 0 TO 40VDC — 5 S/S

T55 X2887X LR01 N/A — ET RSS PIC B L/T OK — 1=GO — 5 S/S

T55 X2886X LR01 N/A — ET RSS PIC B RTST OK — 1=GO — 5 S/S

+5 VDC LSRB

PWR FROM LSRB MDM

ET RSS DISTRIBUTOR

ET CONTROLLER A

FIRING CIRCUIT PIC A

FIRE (2) SWITCH

DC/DC CONVERTER

ARM

CAP BANK 680 MF

FIRE (1) SWITCH

SW DRIVER

SW DRIVER

FIRE 2

FIRE 1

+FIRE

30 ± 10MS TIME DELAY

"FIRE" LATCHING DRIVER

SW

SW

CKT

BITE CIRCUIT

VOLTAGE REG

ET RSS BAT NO 1

18AH

SHUNT

POWER LATCHING SWITCH

CURRENT LIMITER

"ARM" LATCHING DRIVER

GSE INHIBIT/ RESET

100 MS PULSER

100 MS PULSER

SAFE (1) SWITCH

SAFE (2) SWITCH

ARM SWITCH

ET CONTROLLER B

FIRING CIRCUIT PIC B

VOLTAGE REG

ET RSS BAT NO 2

18AH

SHUNT

POWER LATCHING SWITCH

CURRENT LIMITER

"ARM" LATCHING DRIVER

GSE INHIBIT/ RESET

100 MS PULSER

100 MS PULSER

T55 C1075A OA03 OA3 — ET RSS BAT 1 CUR IND — 0 TO 5 AMPS — 5 S/S

T55 V1735A OA03 OA3 — ET RSS BAT 1 VOLT — 0 TO 40VDC — 5 S/S

GSE PWR ON

GSE PWR INHIBIT

PWR TO ET IRD

ET DCDR ARM

T55 X1931E OA02 OA2 — ET RSS ARM — 1=ARM — 25 S/S

ET DCDR FIRE

+5VDC

GSE RSS RTST CMD

T55 X1933E OA02 OA2 — ET RSS FIRE — 1=FIRE — 25 S/S

GSE RSS RTST CMD RET

GSE SAFE 1 (FROM LH SRB)

GSE SAFE 2 (FROM LH SRB)

GSE ARM (FROM LH SRB)

T55 C1076A OA03 OA3 — ET RSS BAT 2 CUR IND — 0 TO 5 AMPS — 5 S/S

T55 V1736A OA03 OA3 — ET RSS BAT 2 VOLT — 0 TO 40VDC — 5 S/S

GSE PWR ON

GSE PWR INHIBIT

ET DCDR ARM

ET DCDR FIRE

+5VDC

GSE RSS RTST CMD

GSE RSS RTST CMD RET

ARM LIGHT

ACA 2

ACA 1

RNG SAF ARM

PHL F6A8 XD53

BASIC REV E

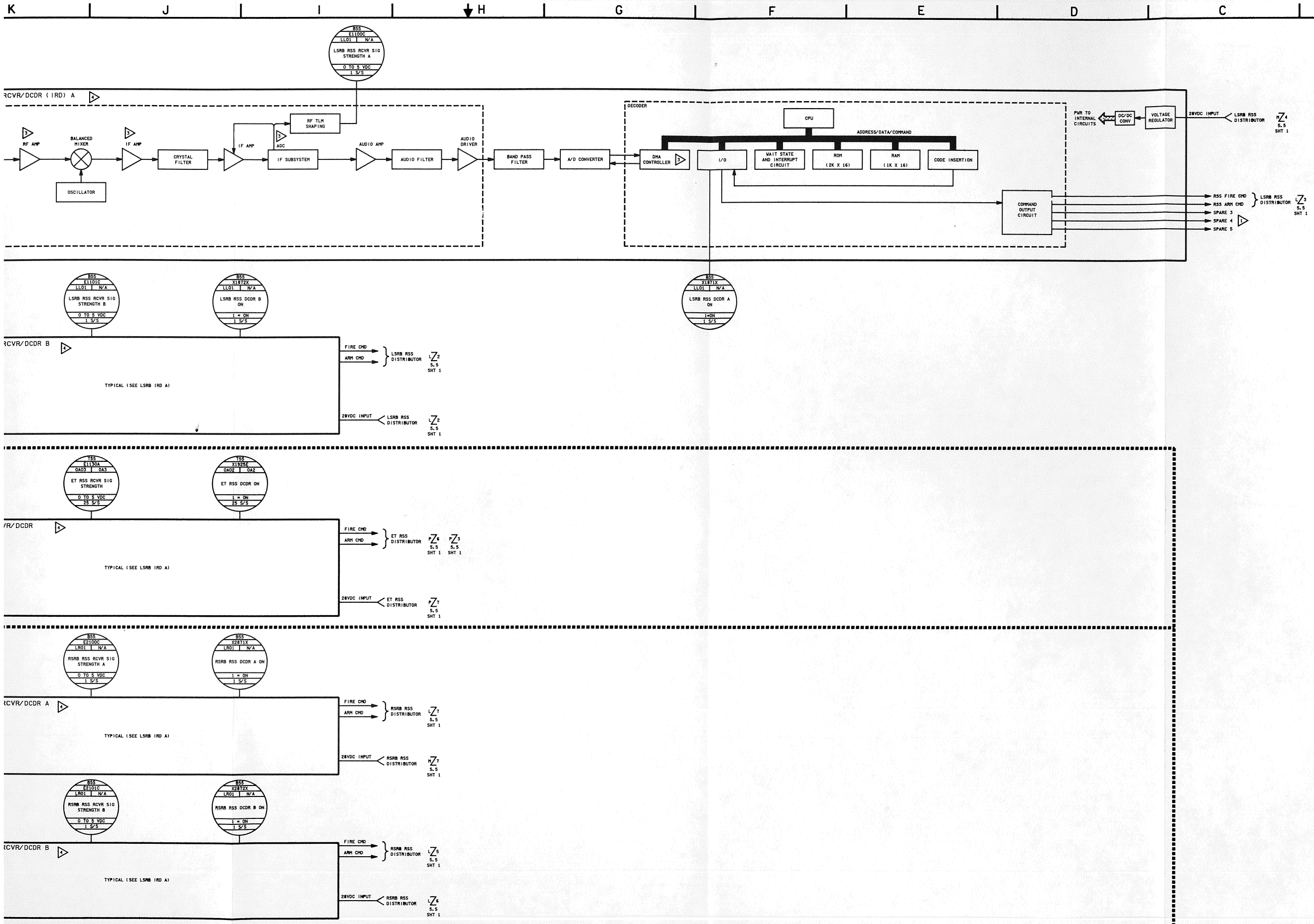

DATE: 11/12/87	NAME: MAG	VERSION: BPT; 5
DATE: 11/18/87	NAME: MAG	VERSION: INK; 2
DATE: 10/06/90	NAME: CAR	VERSION: INK; 3

5. SEE TABLE 5-XIII FOR DRAWING REFERENCES

4. UPLINK COMMAND SIGNALS ARE RECEIVED, DETECTED, AND CONVERTED TO A STRING OF DIGITAL SAMPLES. THESE SAMPLES ARE STORED VIA DMA IN A REVOLVING RAM BUFFER. AFTER RECEPTION, A CORRECTLY FORMATTED UPLINK COMMAND IS COMPARED TO STORED CODES TO DETERMINE WHICH CODE WAS TRANSMITTED. IF AN EXACT MATCH IS FOUND, THE APPROPRIATE COMMAND IS OUTPUT. THE CPU EXECUTES PROGRAM INSTRUCTIONS STORED IN A ROM

3. RF - RADIO FREQUENCY
AGC - AUTOMATIC GAIN CONTROL
IF - INTERMEDIATE FREQUENCY
DMA - DIRECT MEMORY ACCESS

2. LIGHTNING PROTECTION HAS BEEN PROVIDED BY USING 1/4 WAVE SHORTING STUBS IN THE ANTENNA LEAD-IN CABLE

NOTES: 1. THERE ARE FIVE DECODER OUTPUTS ONLY TWO OF WHICH ARE USED. (THREE SPARES)

5 RSS 2

SIGNATURE	DATE	NATIONAL AERONAUTICS AND SPACE ADMINISTRATION LYNDON B. JOHNSON SPACE CENTER HOUSTON, TEXAS
DSGN B. J. TEDDER JR.	8/24/87	
DR		SRB/ET RANGE SAFETY SYSTEM
ENGR D. RANDALL		
ENGR D. Randall	10/11/90	
APP Paul Dyson	10/11/90	
APP		SPACE SHUTTLE ALL
OMNIPLAN S.K. Kimber	11-14-90	DWG NO 5.5
LTR E	PCN	82.5 X 34 PAGE SHEET 2 OF 2

BASIC REV E

DATE= 10/06/90 | NAME= CAR | VERSION= INK.3

0 N M L K J I H

8 7 6 5 4 3 2 1

LEFT SOLID ROCKET BOOSTER

EXTERNAL TANK

RIGHT SOLID ROCKET BOOSTER

BASIC REV E

RSS COMMAND ANTENNA B

RSS COMMAND ANTENNA A

DIRECTIONAL COUPLER

HYBRID COUPLER

GSE INPUT

50 OHM TERM

LSRB INTEGRATED RCVR/DCDR (IRD) A

RECEIVER

PRESELECTOR

RF AMP

BALANCED MIXER

OSCILLATOR

IF AMP

CRYSTAL FILTER

IF AMP

AGC

RF TLM SHAPING

IF SUBSYSTEM

AUDIO AMP

AUDIO FILTER

AUDIO DRIVER

BAND PASS FILTER

BSS E1100C LL01 | N/A
LSRB RSS RCVR SIG STRENGTH A
0 TO 5 VDC
1 S/S

BSS E1101C LL01 | N/A
LSRB RSS RCVR SIG STRENGTH B
0 TO 5 VDC
1 S/S

BSS X1872X LL01 | N/A
LSRB RSS DCDR B ON
1 = ON
1 S/S

LSRB INTEGRATED RCVR/DCDR B

TYPICAL (SEE LSRB IRD A)

FIRE CMD
ARM CMD
LSRB RSS DISTRIBUTOR
Z2 5.5 SHT 1

28VDC INPUT
LSRB RSS DISTRIBUTOR
Z2 5.5 SHT 1

T55 E1130A OA03 | OA3
ET RSS RCVR SIG STRENGTH
0 TO 5 VDC
25 S/S

T59 X1925E OA02 | OA2
ET RSS DCDR ON
1 = ON
25 S/S

ET INTEGRATED RCVR/DCDR

TYPICAL (SEE LSRB IRD A)

FIRE CMD
ARM CMD
ET RSS DISTRIBUTOR
Z6 5.5 SHT 1
Z3 5.5 SHT 1

28VDC INPUT
ET RSS DISTRIBUTOR
Z7 5.5 SHT 1

BSS E2100C LR01 | N/A
RSRB RSS RCVR SIG STRENGTH A
0 TO 5 VDC
1 S/S

BSS X2871X LR01 | N/A
RSRB RSS DCDR A ON
1 = ON
1 S/S

RSRB INTEGRATED RCVR/DCDR A

TYPICAL (SEE LSRB IRD A)

FIRE CMD
ARM CMD
RSRB RSS DISTRIBUTOR
Z7 5.5 SHT 1

28VDC INPUT
RSRB RSS DISTRIBUTOR
Z7 5.5 SHT 1

BSS E2101C LR01 | N/A
RSRB RSS RCVR SIG STRENGTH B
0 TO 5 VDC
1 S/S

BSS X2872X LR01 | N/A
RSRB RSS DCDR B ON
1 = ON
1 S/S

RSRB INTEGRATED RCVR/DCDR B

TYPICAL (SEE LSRB IRD A)

FIRE CMD
ARM CMD
RSRB RSS DISTRIBUTOR
Z5 5.5 SHT 1

28VDC INPUT
RSRB RSS DISTRIBUTOR
Z4 5.5 SHT 1

TABLE 5-I.- PRIMARY C/W PARAMETER PROM LIMITS

C/W Annunciator Loc	Title	Primary C/W No.	MML no.	Title	PROM limits (V dc/eng units)[a] Lower	Upper	Minimum change increment[b]	Backup C/W alarm MML no.
1A	O2 PRESS	0	V45P1110A	O2 TK 1 P	0.25/540	4.70/985	5 psia	Same
		10	V45P1210A	O2 TK 2 P	0.25/540	4.70/985	5 psia	Same
		20[c]	V45P1310A	O2 TK 3 P	0.25/540	4.70/985	5 psia	Same
		30[c]	V45P1410A	O2 TK 4 & 5 P	0.25/540	4.70/985	5 psia	Same
		40[c,d]	V45P1510A	O2 TK 5 P	0.25/540	4.70/985	5 psia	Same
1B	H2 PRESS	50	V45P2110A	H2 TK 1 P	0.25/153	4.65/294	1.6 psia	Same
		60	V45P2210A	H2 TK 2 P	0.25/153	4.65/294	1.6 psia	Same
		70[c]	V45P2310A	H2 TK 3 P	0.25/153	4.65/294	1.6 psia	Same
		80[c]	V45P2410A	H2 TK 4 & 5 P	0.25/153	4.65/294	1.6 psia	Same
		90[c,d]	V45P2510A	H2 TK 5 P	0.25/153	4.65/294	1.6 psia	Same
1C	FUEL CELL REAC	2	V45X1150E	FC1 O2 VLV CLOSED	4.80/0	LL	28 V BL	Same
		12	V45X2150E	FC1 H2 VLV CLOSED	4.80/0	LL	28 V BL	Same
		22	V45X1155E	FC2 O2 VLV CLOSED	4.80/0	LL	28 V BL	Same
		32	V45X2155E	FC2 H2 VLV CLOSED	4.80/0	LL	28 V BL	Same
		42	V45X1160E	FC3 O2 VLV CLOSED	4.80/0	LL	28 V BL	Same
		52	V45X2160E	FC3 H2 VLV CLOSED	4.80/0	LL	28 V BL	Same
1D	FUEL CELL STACK TEMP	62	V45T0120A	FC1 STACK TEMP	3.30/173	4.25/244	3.75° F	Same
		72	V45T0220A	FC2 STACK TEMP	3.30/173	4.25/244	3.75° F	Same
		82	V45T0320A	FC3 STACK TEMP	3.30/173	4.25/244	3.75° F	Same
1E	FUEL CELL PUMP	92	V45X0143E	FC1 PUMP ΔP LOW	4.80/0	LL	28 V BL	Same
		102	V45X0243E	FC2 PUMP ΔP LOW	4.80/0	LL	28 V BL	Same
		112	V45X0343E	FC3 PUMP ΔP LOW	4.80/0	LL	28 V BL	Same
2A	CABIN ATM	4[c]	V61P2405A	CABIN PRESS	3.45/[e]	3.80/[f]	0.2 psia	Same
		14	V61R2105A	SYS 1 O2 FLOW	HL	4.90/4.9	0.05 lb/h	Same
		24	V61R2205A	SYS 2 O2 FLOW	HL	4.90/4.9	0.05 lb/h	Same
		34[c]	V61P2511A	O2 PP A	2.70/2.70	3.60/3.60	0.05 psia	Same
		44[c]	V61P2513A	O2 PP B	2.70/2.70	3.60/3.60	0.05 psia	Same
		54	V61R2553A	SYS 1 GN2 FLOW	HL	4.90/4.9	0.05 lb/h	Same
		64	V61R2554A	SYS 2 GN2 FLOW	HL	4.90/4.9	0.05 lb/h	Same
2B	O2 HEATER TEMP	1	V45T1107A	O2 TK 1 HTR 1 T	HL	4.30/349	9° F	Same
		11	V45T1109A	O2 TK 1 HTR 2 T	HL	4.30/349	9° F	Same
		21	V45T1207A	O2 TK 2 HTR 1 T	HL	4.30/349	9° F	Same
		31	V45T1209A	O2 TK 2 HTR 2 T	HL	4.30/349	9° F	Same
		41	V45T1307A	O2 TK 3 HTR 1 T	HL	4.30/349	9° F	Same
		51	V45T1309A	O2 TK 3 HTR 2 T	HL	4.30/349	9° F	Same
		61	V45T1407A	O2 TK 4 HTR 1 T	HL	4.30/349	9° F	Same
		71	V45T1409A	O2 TK 4 HTR 2 T	HL	4.30/349	9° F	Same
		81[d]	V45T1507A	O2 TK 5 HTR 1 T	HL	4.30/349	9° F	Same

[a] Parameters with HL in lower limit column are high limit only channels (fixed by the PROM) and both limits (lower and upper) are high limit tested. For normal limit changes on high limit only channels, only the upper limit need be changed as the PROM lower limit is 5.00 volts. Parameters with LL in upper limit column are low limit only channels and both upper and lower limits are low limit tested. For limit changes down to 0.10 volt on low limit only channels, only the lower limit need be changed as the PROM upper limit is 0.10 volt. Engineering units correspond to specification calibration curve values. Refer to specific vehicle calibration curve for true value.

[b] The minimum change increment is the engineering unit value associated with a panel R13 limit set value thumbwheel setting change of 0.05 volt for analog parameters. Bilevel parameters are indicated as 5 volts or 28 volts.

[c] Reference table 5-II for parameter flight values and inhibit status.

[d] OV-105 only.

[e] 13.66 for OV-102 13.71 for OV-104
13.42 for OV-103 13.78 for OV-105

[f] 15.02 for OV-102 15.10 for OV-104
14.80 for OV-103 15.17 for OV-105

TABLE 5-I.- Continued

C/W Annunciator Loc	Title	Primary C/W No.	MML no.	Title	PROM limits (V dc/eng units)[a] Lower	Upper	Minimum change increment[b]	Backup C/W alarm MML no.
2C	MAIN BUS UNDERVOLT	3	V76V0101A	MN A BUS U/V	3.30/26.4	LL	0.4 V dc	V76V0100A
		13	V76V0201A	MN B BUS U/V	3.30/26.4	LL	0.4 V dc	V76V0200A
		23	V76V0301A	MN C BUS U/V	3.30/26.4	LL	0.4 V dc	V76V0300A
2D	AC VOLTAGE	33	V76X1505E	AC1 BUS O/V - U/V	HL	5.00/28	28 V BL	V76V1500A V76V1501A V76V1502A
		43	V76X1605E	AC2 BUS O/V - U/V	HL	5.00/28	28 V BL	V76V1600A V76V1601A V76V1602A
		53	V76X1705E	AC3 BUS O/V - U/V	HL	5.00/28	28 V BL	V76V1700A V76V1701A V76V1702A
2E	AC OVERLOAD	63	V76X1506E	AC1 BUS OVERLOAD	HL	5.00/28	28 V BL	Same
		73	V76X1606E	AC2 BUS OVERLOAD	HL	5.00/28	28 V BL	Same
		83	V76X1706E	AC3 BUS OVERLOAD	HL	5.00/28	28 V BL	Same
3A	FREON LOOP	106[c]	V63R1100A	FCL 1 FLOW	1.00/1287	LL	26 lb/hg	Same
		107[c]	V63T1207A	FCL 1 EVAP OUT T	0.35/32.25	1.90/64.9	0.08° F	Same
		116[c]	V63R1300A	FCL 2 FLOW	1.00/1287	LL	26 lb/hg	Same
		117[c]	V63T1407A	FCL 2 EVAP OUT T	0.35/32.35	1.90/64.9	0.08° F	Same
3B	AV BAY/ CABIN AIR	74[c]	V61P2556A	CABIN FAN ΔP	1.75/2.8	4.40/7.04	0.08 IN H_2O	Same
		84	V61T2645A	AV BAY 1 OUT AIR T	HL	4.25/130	1° F	Same
		94	V61T1650A	AV BAY 2 OUT AIR T	HL	4.25/130	1° F	Same
		104	V61T1661A	AV BAY 3 OUT AIR T	HL	4.25/130	1° F	Same
		114	V61T2635A	CABIN HX OUT AIR T	HL	5.00/145	1° F	Same
3C	IMU	103	V72X4560X	IMU FAIL	HL	2.50/5	5 V BL	Same
3D	FWD RCS	6	V42P1115C	RCS-F OX TK ULL P	2.50/200	3.90/312	4 psia	Same
		16	V42P1116C	RCS-F FU TK ULL P	2.50/200	3.90/312	4 psia	Same
		26	V72X6035X	RCS-F LEAK/ULL P	HL	2.50/5	5 V BL	Same
3E	RCS JET	96	V72X4545X	RCS JET FAIL	HL	2.50/5	5 V BL	Same
4A	H2O LOOP	105	V61P2600A	LOOP 1 H2O PUMP P	0.65/19.5	2.65/79.5	1.5 psia	Same
		115	V61P2700A	LOOP 2 H2O PUMP P	1.50/45	2.70/81.0	1.5 psia	Same
4B	RGA/ACCEL	93	V72X4590X	RGA/ACCEL FAIL	HL	2.50/5	5 V BL	Same
4C	AIR DATA	91	V72X4580X	NAV SENSOR FAIL	HL	2.50/5	5 V BL	Same
4D	LEFT RCS	36	V42P2115C	RCS-L OX TK ULL P	2.50/200	3.90/312	4 psia	Same
		46	V42P2116C	RCS-L FU TK ULL P	2.50/200	3.90/312	4 psia	Same
		56	V72X6036X	RCS-L LEAK/ULL P	HL	2.50/5	5 V BL	Same

[a] Parameters with HL in lower limit column are high limit only channels (fixed by the PROM) and both limits (lower and upper) are high limit tested. For normal limit changes on high limit only channels, only the upper limit need be changed as the PROM lower limit is 5.00 volts. Parameters with LL in upper limit column are low limit only channels and both upper and lower limits are low limit tested. For limit changes down to 0.10 volt on low limit only channels, only the lower limit need be changed as the PROM upper limit is 0.10 volt. Engineering units correspond to specification calibration curve values. Refer to specific vehicle calibration curve for true value.

[b] The minimum change increment is the engineering unit value associated with a panel R13 limit set value thumbwheel setting change of 0.05 volt for analog parameters. Bilevel parameters are indicated as 5 volts or 28 volts.

[c] Reference table 5-II for parameter flight values and inhibit status..

[g] Nonlinear calibration, average change increment.

TABLE 5-I.- Continued

C/W Annunciator Loc	Title	Primary C/W No.	MML no.	Title	PROM limits (V dc/eng units)[a] Lower	Upper	Minimum change increment[b]	Backup C/W alarm MML no.
4E	RIGHT RCS	66	V42P3115C	RCS-R OX TK ULL P	2.50/200	3.90/312	4 psia	Same
		76	V42P3116C	RCS-R FU TK ULL P	2.50/200	3.90/312	4 psia	Same
		86	V72X6037X	RCS-R LEAK/ULL P	HL	2.50/5	5 V BL	Same
5A	--------	113		SPARE	HL	2.50/		Same
5B	LEFT RHC	100	V72X4575X	LEFT RHC FAIL	HL	2.50/5	5 V BL	Same
5C	RIGHT/AFT RHC	110	V72X4570X	RIGHT/AFT RHC FAIL	HL	2.50/5	5 V BL	Same
5D	LEFT OMS	7[c]	V43P4221C	OMS-L OX TK ULL P	2.90/232	3.55/284	4 psia	Same
		17[c]	V43P4321C	OMS-L FU TK ULL P	2.90/232	3.55/284	4 psia	Same
		27	V72X4547X	OMS-L ENG ABNORMAL	HL	2.50/5	5 V BL	Same
5E	RIGHT OMS	37[c]	V43P5221C	OMS-R OX TK ULL P	2.90/232	3.55/284	4 psia	Same
		47[c]	V43P5321C	OMS-R FU TK ULL P	2.90/232	3.55/284	4 psia	Same
		57	V72X4548X	OMS-R ENG ABNORMAL	HL	2.50/5	5 V BL	Same
6A	PAYLOAD WARNING	55	P01X5025E	P/L WARN 1	HL	2.50/		
		65	P01X5026E	P/L WARN 2	HL	2.50/		
		75	P01X5027E	P/L WARN 3	HL	2.50/		
		85	P01X5028E	P/L WARN 4	HL	2.50/		
		95	P01X5029E	P/L WARN 5	HL	2.50/		
6B	GPC	5	V72X7011E	GPC 1 FAIL	HL	2.50/5	5 V BL	Same
		15	V72X7012E	GPC 2 FAIL	HL	2.50/5	5 V BL	Same
		25	V72X7013E	GPC 3 FAIL	HL	2.50/5	5 V BL	Same
		35	V72X7014E	GPC 4 FAIL	HL	2.50/5	5 V BL	Same
		45	V72X7015E	GPC 5 FAIL	HL	2.50/5	5 V BL	Same
6C	FCS SATURATION	101	V72X4555X	FCS SATURATION	HL	2.50/5	5 V BL	Same
6D	OMS KIT	77[c]	V43P6221C	OMS-PBK OX TK ULL P	2.90/232	3.55/284	4 psia	Same
		87[c]	V43P6321C	OMS-PBK FU TK ULL P	2.90/232	3.55/284	4 psia	Same
6E	OMS TVC	67	V72X4546X	OMS TVC FAIL	HL	2.50/5	5 V BL	Same
7A	PAYLOAD CAUTION	97	V72X0001Y	P/L CAUTION	HL	2.50/5	5 V BL	Same
7B	PRIMARY C/W	--	--------	CWE SELF TEST FAIL	--	--	--	None
7C	FCS CHANNEL	111	V72X4550X	FCS CH BYPASS/FAIL	HL	2.50/5	5 V BL	Same

[a] Parameters with HL in lower limit column are high limit only channels (fixed by the PROM) and both limits (lower and upper) are high limit tested. For normal limit changes on high limit only channels, only the upper limit need be changed as the PROM lower limit is 5.00 volts. Parameters with LL in upper limit column are low limit only channels and both upper and lower limits are low limit tested. For limit changes down to 0.10 volt on low limit only channels, only the lower limit need be changed as the PROM upper limit is 0.10 volt. Engineering units correspond to specification calibration curve values. Refer to specific vehicle calibration curve for true value.

[b] The minimum change increment is the engineering unit value associated with a panel R13 limit set value thumbwheel setting change of 0.05 volt for analog parameters. Bilevel parameters are indicated as 5 volts or 28 volts.

[c] Reference table 5-II for parameter flight values and inhibit status.

TABLE 5-I.- Concluded

C/W Annunciator Loc	Title	Primary C/W No.	MML no.	Title	PROM limits (V dc/eng units)[a] Lower	Upper	Minimum change increment[b]	Backup C/W alarm MML no.
7D	MPS	9[c]	V41P1150A	MPS-C ENG He TK P	1.15/1150	LL	50 psia	Same
		19[c]	V41P1250A	MPS-L ENG He TK P	1.15/1150	LL	50 psia	Same
		29[c]	V41P1350A	MPS-R ENG He TK P	1.15/1150	LL	50 psia	Same
		39[c]	V41P1154A	MPS-C ENG He REG P	3.40/680	4.05/810	10 psia	SM alert
		49[c]	V41P1254A	MPS-L ENG He REG P	3.40/680	4.05/810	10 psia	SM alert
		59[c]	V41P1354A	MPS-R ENG He REG P	3.40/680	4.05/810	10 psia	SM alert
		69[c]	V41P1533C	MPS LO2 ENG MANF P	HL	4.15/249	3 psia	Same
		79[c]	V41P1433C	MPS LH2 ENG MANF P	HL	3.00/60	1 psia	Same
7E	----------	89		SPARE	HL	2.50/		
8A	BACKUP C/W ALARM	--	V72X4530X	BACKUP C/W A CMD 1	--	--		
		--	V72X4531X	BACKUP C/W A CMD 2	--	--		
		--	V72X4532X	BACKUP C/W A CMD 3	--	--		
		--	V72X4533X	BACKUP C/W A CMD 4	--	--		
		--	V72X4542X	BACKUP C/W B CMD 1	--	--		
			V72X4543X	BACKUP C/W B CMD 2	--	--		
8B	APU TEMP	8[c]	V46T0142A	APU 1 EGT	HL	4.20/1260	15° F	V46T0140A
		18[c]	V46T0242A	APU 2 EGT	HL	4.20/1260	15° F	V46T0240A
		28[c]	V46T0342A	APU 3 EGT	HL	4.20/1260	15° F	V46T0340A
		38	V46T0150A	APU 1 LUBE OIL T	HL	2.90/290	5° F	Same
		48	V46T0250A	APU 2 LUBE OIL T	HL	2.90/290	5° F	Same
		58	V46T0350A	APU 3 LUBE OIL T	HL	2.90/290	5° F	Same
8C	APU OVERSPEED	68	V46X0165E	APU 1 OVERSPEED	HL	5.00/28	28 V BL	V46R0135A
		78	V46X0265E	APU 2 OVERSPEED	HL	5.00/28	28 V BL	V46R0235A
		88	V46X0365E	APU 3 OVERSPEED	HL	5.00/28	28 V BL	V46R0335A
8D	APU UNDERSPEED	98	V46X0166E	APU 1 UNDERSPEED	HL	5.00/28	28 V BL	V46R0135A
		108	V46X0266E	APU 2 UNDERSPEED	HL	5.00/28	28 V BL	V46R0235A
		118	V46X0336E	APU 3 UNDERSPEED	HL	5.00/28	28 V BL	V46R0335A
8E	HYD PRESS	99[c]	V58P0114C	HYD SYS 1 P	3.00/2400	LL	40 psia	V58P0115A
		109[c]	V58P0214C	HYD SYS 2 P	3.00/2400	LL	40 psia	V58P0215A
		119[c]	V58P0314C	HYD SYS 3 P	3.00/2400	LL	40 psia	V58P0315A

[a] Parameters with HL in lower limit column are high limit only channels (fixed by the PROM) and both limits (lower and upper) are high limit tested. For normal limit changes on high limit only channels, only the upper limit need be changed as the PROM lower limit is 5.00 volts. Parameters with LL in upper limit column are low limit only channels and both upper and lower limits are low limit tested. For limit changes down to 0.10 volt on low limit only channels, only the lower limit need be changed as the PROM upper limit is 0.10 volt. Engineering units correspond to specification calibration curve values. Refer to specific vehicle calibration curve for true value.

[b] The minimum change increment is the engineering unit value associated with a panel R13 limit set value thumbwheel setting change of 0.05 volt for analog parameters. Bilevel parameters are indicated as 5 volts or 28 volts.

[c] Reference table 5-II for parameter flight values and inhibit status.

TABLE 5-I		
	SIGNATURE	DATE
ENGR	B. PAWLIK	
ENGR	Benjamin Lewis	9/3/93
APP	Paul Mayce	9/7/93

TABLE 5-II.- SCHEDULED PRIMARY C/W PARAMETER INHIBIT AND LIMIT CHANGES

Time	MML No.	Primary C/W No.	Title	INH/ ENA	New limit (V dc/EU)		
					Lower	Upper	Units
Prelaunch	V61P2405A	004	CABIN PRESS (OV-102)		3.45/13.66	3.90/15.41	psia
			(OV-103)		3.55/13.82	3.95/15.40	psia
			(OV-104)		3.45/13.71	3.90/15.50	psia
			(OV-105)		3.45/13.78	3.85/15.37	psia
	V61P2556A	074	CABIN FAN ΔP		2.65/4.20	4.25/6.80	in. H_2O
	V45P1310A[a]	020	02 TK 3 P	INH			
	V45P1410A[a]	030	02 TK 4 & 5 P	INH			
	V45P1510A[b]	040	02 TK 5 P	INH			
	V45P2310A[a]	070	H2 TK 3 P	INH			
	V45P2410A[a]	080	H2 TK 4 & 5 P	INH			
	V45P2510A[b]	090	H2 TK 5 P	INH			
	V45T1407A	061	02 HTR 1 TK 4[a]	INH			
	V45T1409A	071	02 HTR 2 TK 4[a]	INH			
	V45T1507A	081	02 HTR 1 TK 5[b]	INH			
	V43P4221C	007	OMS-L OX TK ULL P			3.60/288	psia
	V43P4321C	017	OMS-L FU TK ULL P			3.60/288	psia
	V43P5221C	037	OMS-R OX TK ULL P			3.60/288	psia
	V43P5321C	047	OMS-R FU TK ULL P			3.60/288	psia
	V43P6221C[a]	077	OMS-PBK OX TK ULL P	INH			
	V43P6321C[a]	087	OMS-PBK FU TK ULL P	INH			
	V46T0142A	008	APU 1 EGT	INH			
	V46T0242A	018	APU 2 EGT	INH			
	V46T0342A	028	APU 3 EGT	INH			
	V63R1100A	106	FCL 1 FLOW		0.80/1186		lb/h
	V63R1300A	116	FCL 2 FLOW		0.80/1186		lb/h
	V63T1207A	107	FCL 1 EVAP OUT T			4.30/115	°F
	V63T1407A	117	FCL 2 EVAP OUT T			4.30/115	°F
Postinsertion	V41P1150C	009	MPS-C He TK P	INH			
	V41P1250C	019	MPS-L He TK P	INH			
	V41P1350C	029	MPS-R He TK P	INH			
	V41P1154A	039	MPS-C He REG P	INH			
	V41P1254A	049	MPS-L He REG P	INH			
	V41P1354A	059	MPS-R He REG P	INH			
	V58P0114C	099	HYD SYS 1 P	INH			
	V58P0214C	109	HYD SYS 2 P	INH			
	V58P0314C	119	HYD SYS 3 P	INH			
	V61P2405A	004	CABIN PRESS (OV-102)			3.85/15.22	psia
			(OV-103)			3.90/15.20	psia
			(OV-104)			3.85/15.30	psia
			(OV-105)			3.80/15.17	psia
	V63T1207A	107	FCL 1 EVAP OUT T			1.90/64.8	°F
	V63T1407A	117	FCL 2 EVAP OUT T			1.90/64.8	°F
Predeorbit	V58P0114C	099	HYD SYS 1 P	ENA			
	V58P0214C	109	HYD SYS 2 P	ENA			
	V58P0314C	119	HYD SYS 3 P	ENA			
	V41P1154A	039	MPS-C He REG P	ENA			psia
	V41P1254A	049	MPS-L He REG P	ENA	.030/60.0		psia
	V41P1354A	059	MPS-R He REG P	ENA	.030/60.0		psia
	V41P1533C	069	MPS MANF P LO2	INH	.030/60.0		
	V41P1433C	079	MPS MANF P LH2	INH			

[a]When kit is not installed.
[b]Unless OV-105 and TK 5 flown.

TABLE 5-II		
	SIGNATURE	DATE
ENGR	B. PAWLIK	
ENGR	Brian Pawlik	9/3/93
APP	Robert Joyce	9/9/93

TABLE 5-II.- SCHEDULED PRIMARY C/W PARAMETER INHIBIT AND LIMIT CHANGES

Time	MML No.	Primary C/W No.	Title	INH/ ENA	New limit (V dc/EU)		
					Lower	Upper	Units
Prelaunch	V61P2405A	004	CABIN PRESS (OV-102)			3.90/15.41	psia
			(OV-103)			3.90/15.54	psia
			(OV-104)			3.80/15.38	psia
	V61P2556A	074	CABIN FAN ΔP		2.65/4.20	4.25/6.80	in. H_2O
	V45P1310A[a]	020	02 TK 3 P	INH			
	V45P1410A[a]	030	02 TK 4 & 5 P	INH			
	V45P2310A[a]	070	H2 TK 3 P	INH			
	V45P2410A[a]	080	H2 TK 4 & 5 P	INH			
	V43P4221C	007	OMS-L OX TK ULL P			3.60/288	psia
	V43P4321C	017	OMS-L FU TK ULL P			3.60/288	psia
	V43P5221C	037	OMS-R OX TK ULL P			3.60/288	psia
	V43P5321C	047	OMS-R FU TK ULL P			3.60/288	psia
	V43P6221C[a]	077	OMS-PBK OX TK ULL P	INH			
	V43P6321C[a]	087	OMS-PBK FU TK ULL P	INH			
	V46T0142A	008	APU 1 EGT	INH			
	V46T0242A	018	APU 2 EGT	INH			
	V46T0342A	028	APU 3 EGT	INH			
	V63R1100A	106	FCL 1 FLOW			0.08/1186	lb/h
	V63R1300A	116	FCL 2 FLOW			0.80/1186	lb/h
	V63T1207A	107	FCL 1 EVAP OUT T			4.30/115	°F
	V63T1407A	117	FCL 2 EVAP OUT T			4.30/115	°F
Postinsertion	V41P1150C	009	MPS-C He TK P	INH			
	V41P1250C	019	MPS-L He TK P	INH			
	V41P1350C	029	MPS-R He TK P	INH			
	V41P1154A	039	MPS-C He REG P	INH			
	V41P1254A	049	MPS-L He REG P	INH			
	V41P1354A	059	MPS-R He REG P	INH			
	V58P0114C	099	HYD SYS 1 P	INH			
	V58P0214C	109	HYD SYS 2 P	INH			
	V58P0314C	119	HYD SYS 3 P	INH			
	V61P2405A	004	CABIN PRESS (OV-102)		3.45/13.66	3.85/15.22	psia
			(OV-103)		3.45/13.74	3.85/15.34	psia
			(OV-104)		3.40/13.79	3.80/15.38	psia
	V63T1207A	107	FCL 1 EVAP OUT T			1.90/64.8	°F
	V63T1407A	117	FCL 2 EVAP OUT T			1.90/64.8	°F
Predeorbit	V58P0114C	099	HYD SYS 1 P	ENA			
	V58P0214C	109	HYD SYS 2 P	ENA			
	V58P0314C	119	HYD SYS 3 P	ENA			
	V41P1154A	039	MPS-C He REG P	ENA	.030/60.0		psia
	V41P1254A	049	MPS-L He REG P	ENA	.030/60.0		psia
	V41P1354A	059	MPS-R He REG P	ENA	.030/60.0		psia
	V41P1533C	069	MPS MANF P LO2	INH			
	V41P1433C	079	MPS MANF P LH2	INH			

[a]When kit is not installed.

TABLE 5-II		
	SIGNATURE	DATE
ENGR	B. PAWLIK	
ENGR	Benjamin Pawlik	10/29/91
APP	Patrick Joyce	10/31/91

FOR DETAILED COMPONENT AND LOGIC INFORMATION REFER TO:

SSSH DWG NO.	SSSH DWG TITLE	VENDOR NAME	VENDOR DWG NO.	VENDOR SHEET NO.	REV	DATE	VENDOR DRAWING TITLE
5.1	SMOKE DETECTION AND FIRE SUPPRESSION	R. I. - DOWNEY	VS70-620109	1 - 6	D	2/21/89	SCHEMATIC DIAGRAM - SMOKE DETECTOR/FIRE EXTINGUISHING
		R. I.	V070-623420	1	B	9/13/88	CM SYSTEM INSTL SMOKE DETECTION & FIRE SUPPRESSION
		R. I.	VS70-960099	68 - 73	A12	1/24/89	SMOKE DETECTOR SUBSYSTEM
		SODB	JSC-08934	4.6.5	D AMEND-MENT 193		
5.2 (SHEETS 1-2)	CAUTION/WARNING OVERVIEW	R.I.	VS70-973099	27-34	A/B03	4/25/90	INTEGRATED SYSTEM SCHEMATICS ORBITER OV-099 DISPLAYS AND CONTROLS
		R.I.	VS70-730622	1-7	A	9/1/83	SCHEMATIC DIAGRAM - CAUTION & WARNING SUBSYSTEM
5.4	SOLID ROCKET BOOSTER RECOVERY	R.I.	VS72-948099	35	A	3/26/90	LSRB RCVY: MAIN CHUTE DEPLOY
				36			LSRB RCVY: NOSE CAP RELEASE
				37			LSRB RCVY: NOZZLE JETTISON
				38			LSRB RCVY: CAP VOLT, LOAD TEST, RTST OK
				39			RSRB RCVY: MAIN CHUTE DEPLOY
				40			RSRB RCVY: NOSE CAP RELEASE
				41			RSRB RCVY: NOZZLE JETTISON
				42			RSRB RCVY: CAP VOLT, LOAD TEST, RTST OK
5.5	SRB/ET RANGE	MSFC	10A00570			7/83	RSS HANDBOOK FOR SRB/ET
(SHEET 1)	SAFETY SYSTEM						
		R. I.	VS72-948099	16	A15	3/26/90	RSS A POWER CNTL & MON
				17			RSS B POWER CNTL & MON
				18			LSRB RSS A CONT & MON
				19			RSRB RSS A CONT & MON
				20			LSRB RSS B CONT & MON
				21			RSRB RSS B CONT & MON
				22			LSRB RSS S & A DEVICE
				23			RSRB RSS S & A DEVICE
				46			ET POWER DISTR BUS A & C
				48			ET RSS A CONT & MON FIRE A
				49			ET RSS A CONT & MON ARM A
				50			ET RSS A CONT & MON PIC A
				51			ET RSS B CONT & MON FIRE B
				52			ET RSS B CONT & MON ARM B
				53			ET RSS B CONT & MON PIC B
				54			ET RSS S & A DEVICE
5.5 (SHEET 2)	SRB/ET RANGE SAFETY SYSTEM	R.I.	VS72-948099	16	A15	3/26/90	RSS A POWER CNTL & MON
				17			RSS B POWER CNTL & MON
				18			LSRB RSS A CONT & MON
				19			RSRB RSS A CONT & MON
				20			LSRB RSS B CONT & MON
				21			RSRB RSS B CONT & MON
				47			ET RSS RF A & B CONT
		CINCINNATI ELECTRONICS CORP.	MSFC CONTRACT #NAS8-33440			12/80	INTEGRATED RECEIVER/DECODER TECHNICAL MANUAL
		MSFC	10A00570			7/83	RSS HANDBOOK FOR SRB/ET

DWG	SIGNATURE	DATE	DWG	SIGNATURE	DATE
5.1	ENGR M. FITZPATRICK			ENGR	
	ENGR Michael V. Fitzpatrick	10/29/90		ENGR	
5.2-1,2	ENGR B. PAWLIK			ENGR	
	ENGR Benjamin Pawlik	10/25/90		ENGR	
5.4	ENGR D. RANDALL			APP Mark A. Fenimore	10/29/90
	ENGR David Randall	10/29/90		APP Paul M. Layden	10/29/90
5.5-1,2	ENGR D. RANDALL			OMNIPLAN	
	ENGR David Randall	10/29/90		LTR E	PCN

NATIONAL AERONAUTICS AND SPACE ADMINISTRATION
LYNDON B. JOHNSON SPACE CENTER HOUSTON, TEXAS

VENDOR DRAWING REFERENCES

SPACE SHUTTLE | TBL NO 5-III

ALL

PAGE 5.III-1 | SHEET 1 OF 1

*U.S.GOVERNMENT PRINTING OFFICE:1990-561-057/20054

BASIC REV E

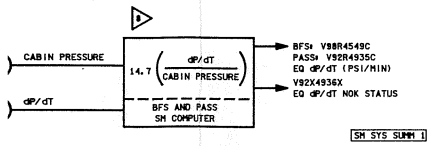

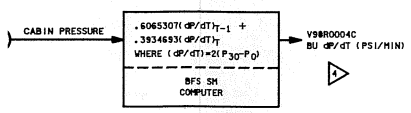

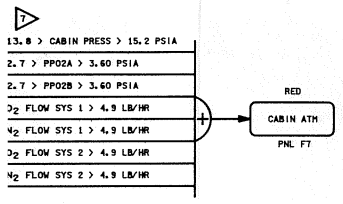

IBIT PARAMETERS	
MSID	NOMINAL STATUS
V42J2131C	1
V42J2132C	1
V42J2133C	1

US: 1=ACTIVE/0=INACTIVE

2 QTY COMP PARAMETERS
DESCRIPTION
12.35
MANIFOLD PRES SYS 1 (V61P2301A)
MANIFOLD PRES SYS 2 (V61P2309A)
SYS 1 TANK 1 TEMP (V61T2406A)
SYS 1 TANK 2 TEMP (V61T2407A)
SYS 2 TANK 1 TEMP (V61T2408A)
SYS 2 TANK 2 TEMP (V61T2409A)
SYS 1 TANK 3 TEMP (V61T2424A)
SYS 1 TANK 4 TEMP (V61T2425A)
SYS 2 TANK 3 TEMP (V61T2422A)
SYS 2 TANK 4 TEMP (V61T2423A)
SYS 1 TANK 1 TEMP FLAG
SYS 1 TANK 2 TEMP FLAG
SYS 2 TANK 1 TEMP FLAG
SYS 2 TANK 2 TEMP FLAG
SYS 1 TANK 3 TEMP FLAG
SYS 1 TANK 4 TEMP FLAG
SYS 2 TANK 3 TEMP FLAG
SYS 2 TANK 4 TEMP FLAG
SYS 1 PRESS FLAG
SYS 2 PRESS FLAG
SYS 1 TANK 1 FLAG
SYS 1 TANK 2 FLAG
SYS 1 TANK 3 FLAG
SYS 1 TANK 4 FLAG
SYS 2 TANK 1 FLAG
SYS 2 TANK 2 FLAG
SYS 2 TANK 3 FLAG
SYS 2 TANK 4 FLAG

LAGS: (1=ACTIVE/0=INACTIVE)

N_2 TANK CONFIGURATION

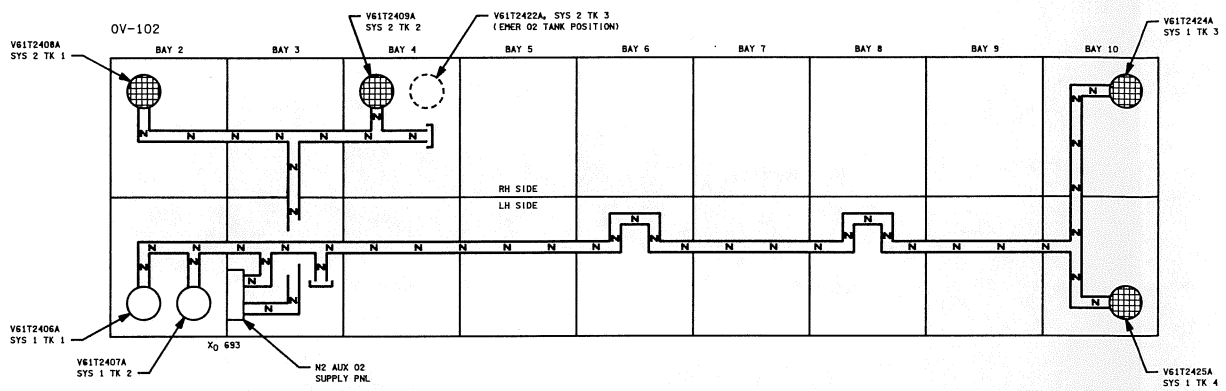

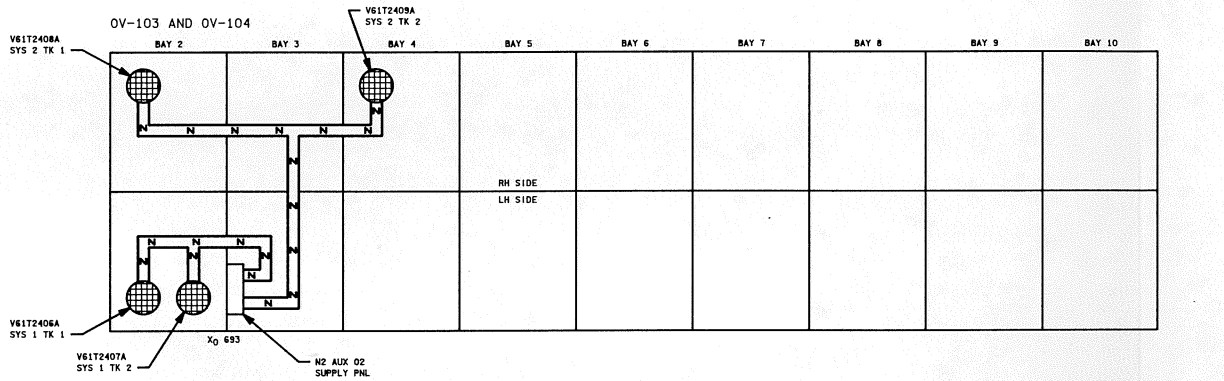

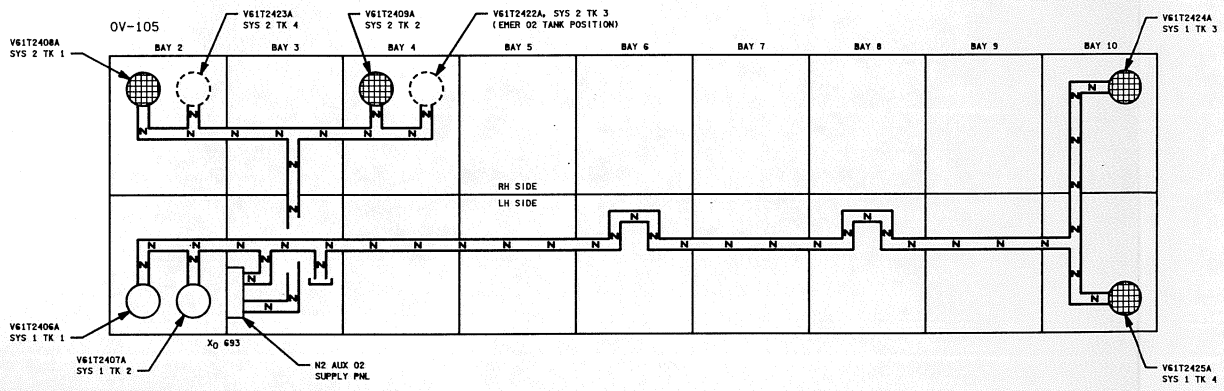

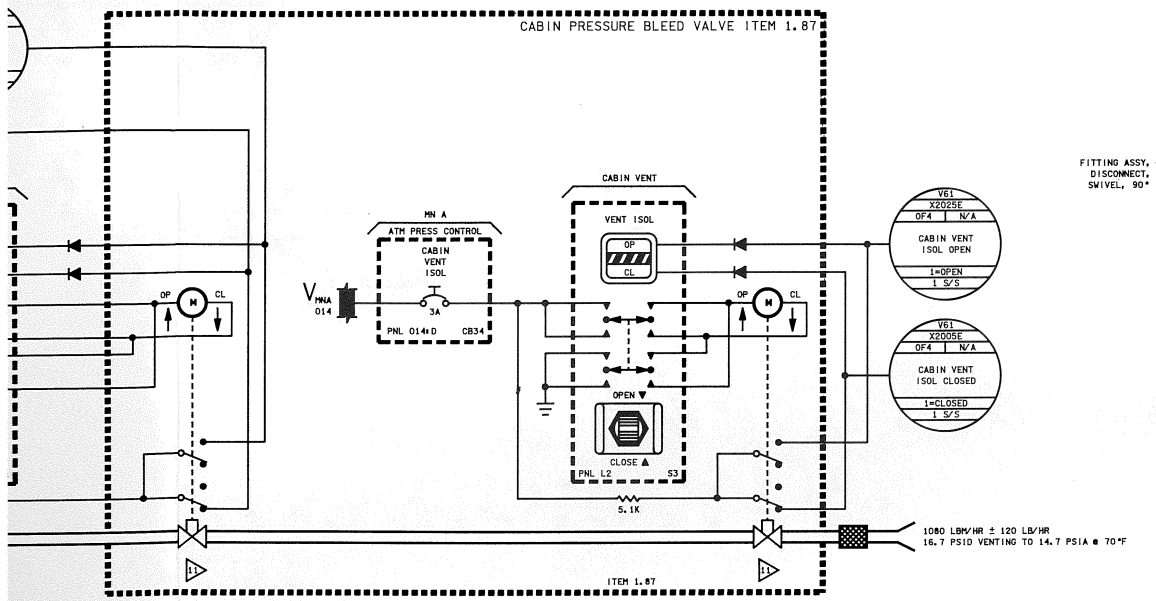

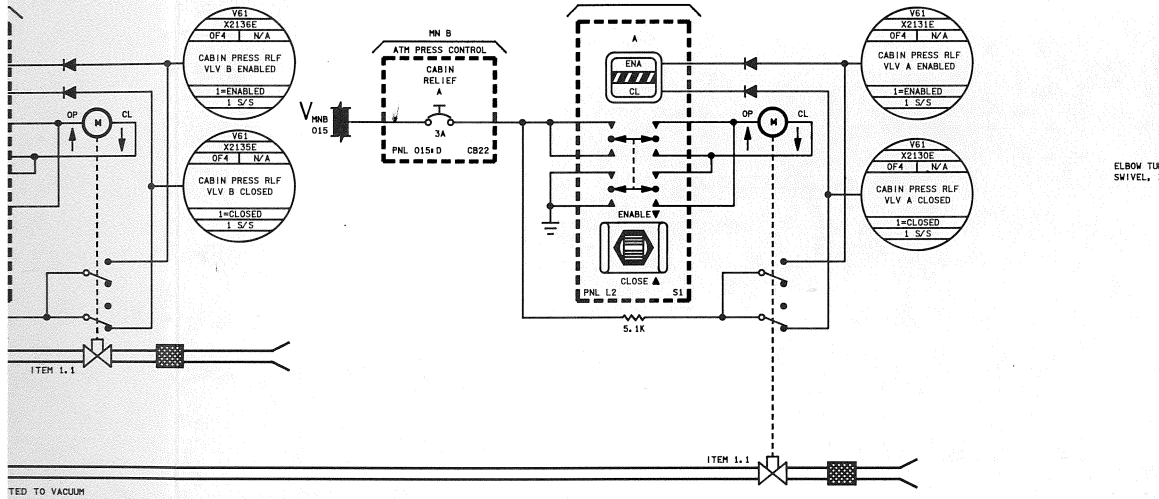

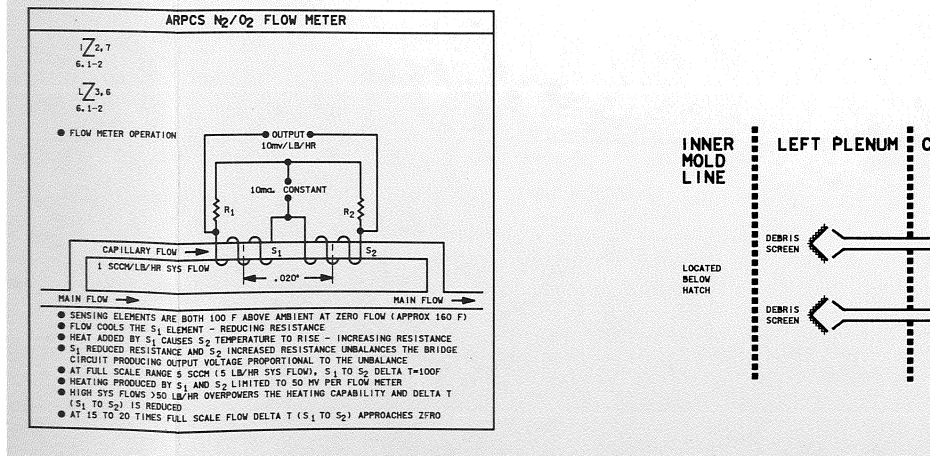

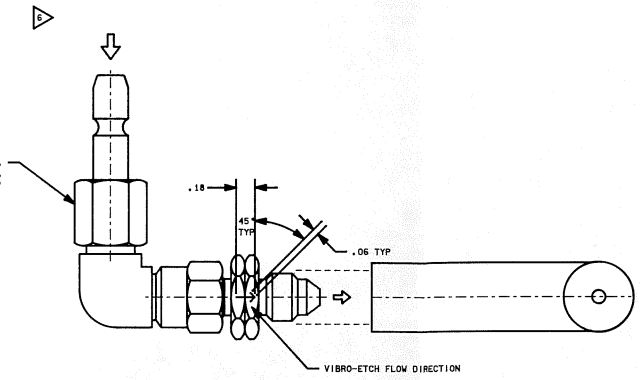

O_2 BLEED ORIFICE
EXTERNAL DETAILS

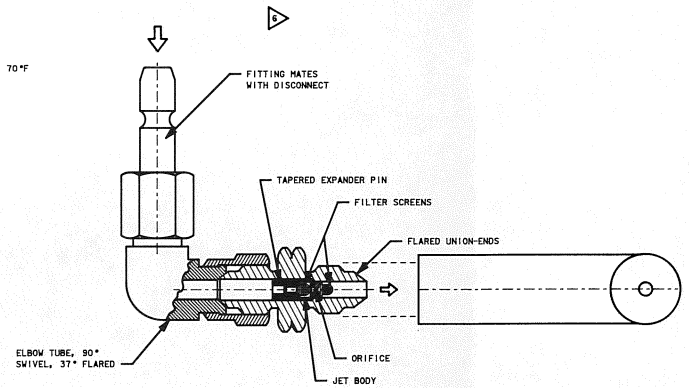

O_2 BLEED ORIFICE
INTERNAL DETAILS

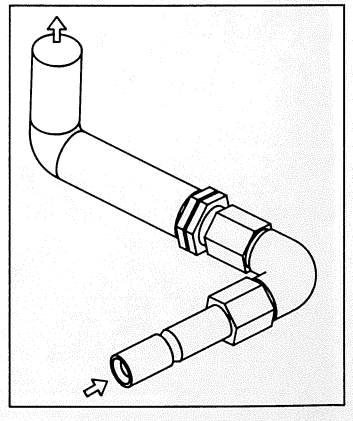

O_2 BLEED ORIFICE
OBLIQUE VIEW

O_2 BLEED ORIFICE SPEC FLOW RATES

CREW SIZE	O_2 SUPPLY PRESSURE PSIA	O_2 MASS FLOW RATE DESIRED	O_2 MASS FLOW RATE PROVIDED
4,5	110.2 ± 10	.24 LB/HR	0.254 +0.052 -0.034 LB/HR
6,7	110.2 ± 10	.36 LB/HR	0.363 +0.064 -0.049 LB/HR

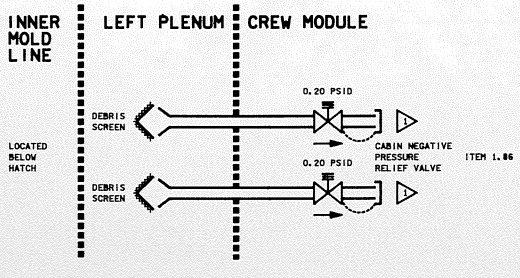

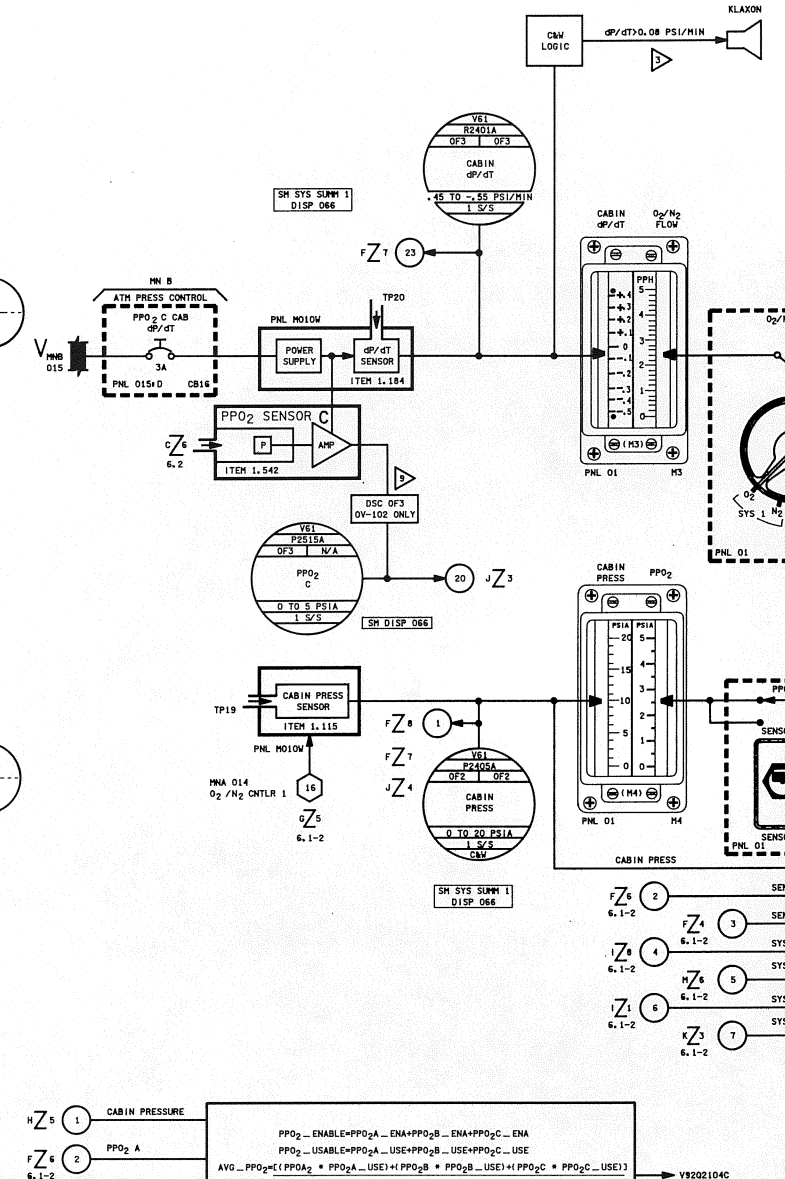

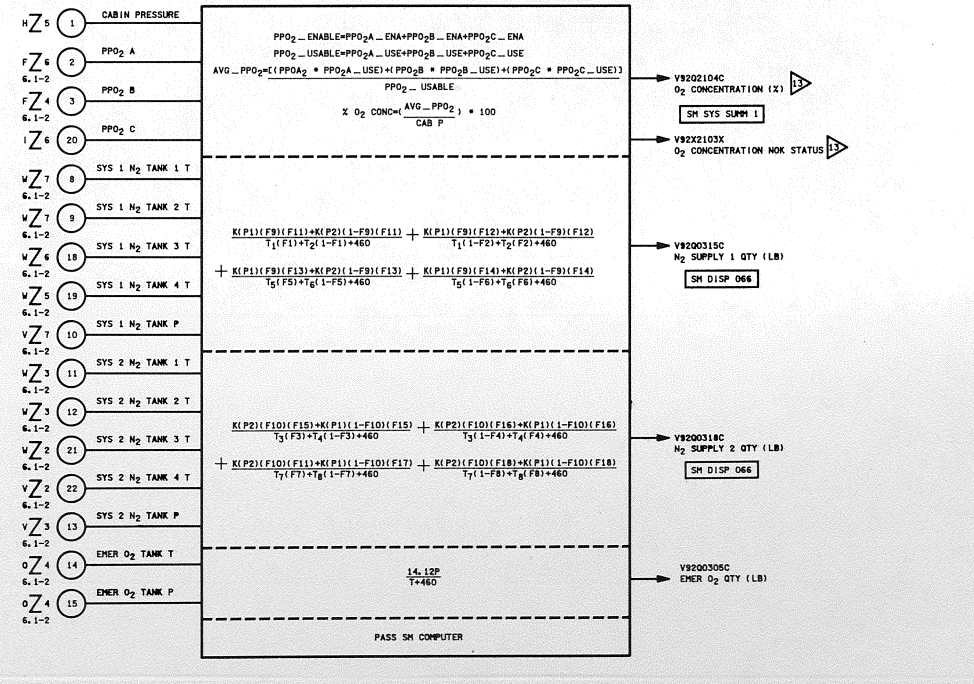

INHIBIT PARAMETERS

PARAMETER	MSID	NOMINAL STATUS
PPO_2 A_ENA	V92J2131C	1
PPO_2 B_ENA	V92J2132C	1
PPO_2 C_ENA	V92J2133C	1

PARAMETER STATUS= 1=ACTIVE/0=INACTIVE

N_2 QTY COMP PARAMETERS

PARAMETER	DESCRIPTION
K	12.35
P1	MANIFOLD PRES SYS 1 (V61P2301A)
P2	MANIFOLD PRES SYS 2 (V61P2309A)
T_1	SYS 1 TANK 1 TEMP (V61T2406A)
T_2	SYS 1 TANK 2 TEMP (V61T2407A)
T_3	SYS 1 TANK 3 TEMP (V61T2408A)
T_4	SYS 2 TANK 2 TEMP (V61T2409A)
T_5	SYS 1 TANK 3 TEMP (V61T2424A)
T_6	SYS 1 TANK 4 TEMP (V61T2425A)
T_7	SYS 2 TANK 3 TEMP (V61T2422A)
T_8	SYS 2 TANK 4 TEMP (V61T2423A)
F1	SYS 1 TANK 1 TEMP FLAG
F2	SYS 1 TANK 2 TEMP FLAG
F3	SYS 1 TANK 3 TEMP FLAG
F4	SYS 2 TANK 2 TEMP FLAG
F5	SYS 1 TANK 3 TEMP FLAG
F6	SYS 1 TANK 4 TEMP FLAG
F7	SYS 2 TANK 3 TEMP FLAG
F8	SYS 2 TANK 4 TEMP FLAG
F9	SYS 1 PRESS FLAG
F10	SYS 2 PRESS FLAG
F11	SYS 1 TANK 1 FLAG
F12	SYS 1 TANK 2 FLAG
F13	SYS 1 TANK 3 FLAG
F14	SYS 1 TANK 4 FLAG
F15	SYS 2 TANK 1 FLAG
F16	SYS 2 TANK 2 FLAG
F17	SYS 2 TANK 3 FLAG
F18	SYS 2 TANK 4 FLAG

ALL FLAGS= (1=ACTIVE/0=INACTIVE)

DATE= 10/28/91	NAME= VSH	VERSION= BPT.9
DATE= 11/06/91	NAME= VSH	VERSION= BPT.10
DATE= 11/14/91	NAME= MDU	VERSION= INK.8

TOTAL USE RATES AND BIT COUNT CHANGE RATES OF METABOLIC DATA FOR VARIOUS CREW SIZES

METABOLIC DATA	5 CREW			6 CREW			7 CREW			8 CREW		
	MIN	NOM	MAX	MIN	NOM	MAX	MIN	NOM	MAX	MIN	NOM	MAX
O2 USE, LB/HR	0.33	0.37	0.43	0.39	0.44	0.52	0.46	0.51	0.61	0.52	0.58	0.70
PPO2 DECAY, PSI/HR	0.025	0.028	0.033	0.03	0.034	0.04	0.035	0.039	0.046	0.04	0.045	0.052
O2 BIT DECR, MIN	48	43	36	40	35	30	34	30	26	30	27	23
CO2 PROD, LB/HR	0.39	0.44	0.54	0.47	0.53	.065	0.55	0.62	0.75	0.62	0.70	0.86
PPCO2 INCR, MMHG/HR*	1.12	1.26	1.53	1.34	1.51	1.84	1.57	1.76	2.15	1.79	2.02	2.45
.12 BIT INCR, MIN*	6.4	5.7	4.7	5.4	4.8	3.9	4.6	4.1	3.3	4.0	3.6	2.9

* WITHOUT CO_2 REMOVAL

MID FUSELAGE CREW MODULE
X_O = 576

CABIN PRESSURE BLEED VALVE ITEM 1.87

V61 X2065E 0F4 | N/A — CABIN VENT OPEN — 1=OPEN 1 S/S
V61 X2045E 0F4 | N/A — CABIN VENT CLOSED — 1=CLOSED 1 S/S

MN A — ATM PRESS CONTROL — CABIN VENT 3A — PNL 014xD CB22
V_{MNA} 014

CABIN VENT — VENT — OP CL — OPEN — CLOSE — PNL L2 S4 — 5.1K

MN A — ATM PRESS CONTROL — CABIN VENT ISOL 3A — PNL 014xD CB34

CABIN VENT — VENT ISOL — OP CL — OPEN — CLOSE — PNL L2 S3 — 5.1K

V61 X2025E 0F4 | N/A — CABIN VENT ISOL OPEN — 1=OPEN 1 S/S
V61 X2005E 0F4 | N/A — CABIN VENT ISOL CLOSED — 1=CLOSED 1 S/S

Y_O =67.7 Z_O =378.2

1080 LBM/HR ± 120 LB/HR
16.7 PSID VENTING TO 14.7 PSIA @ 70°F

ITEM 1.87

MN C — ATM PRESS CONTROL — CABIN RELIEF B 3A — PNL 016xD CB17
V_{MNC} 016

CABIN RELIEF — B — ENA CL — OP CL — ENABLE — CLOSE — PNL L2 S2 — 5.1K

V61 X2136E 0F4 | N/A — CABIN PRESS RLF VLV B ENABLED — 1=ENABLED 1 S/S
V61 X2135E 0F4 | N/A — CABIN PRESS RLF VLV B CLOSED — 1=CLOSED 1 S/S

MIN CRACK 15.5 PSID
MIN RESEAT 15.5 PSID
FULL FLOW 16.0 PSID

Y_O =67.7 Z_O =394.4

MAX FLOW 150 LB/HR

ITEM 1.1

MIN CRACK 15.5 PSID
MIN RESEAT 15.5 PSID
FULL FLOW 16.0 PSID

Y_O =74.2 Z_O =394.4

MAX FLOW 150 LB/HR @ 16 PSIA INLET AND 70°F VENTED TO VACUUM
MAX LEAKAGE @ 15 PSID = 15 SCCM

ITEM 1.1

MN B — ATM PRESS CONTROL — CABIN RELIEF A 3A — PNL 015xD CB28
V_{MNB} 015

CABIN RELIEF — A — ENA CL — OP CL — ENABLE — CLOSE — PNL L2 S1 — 5.1K

V61 X2131E 0F4 | N/A — CABIN PRESS RLF VLV A ENABLED — 1=ENABLED 1 S/S
V61 X2130E 0F4 | N/A — CABIN PRESS RLF VLV A CLOSED — 1=CLOSED 1 S/S

ARPCS N_2/O_2 FLOW METER

Z2,7 6.1-2
Z3,6 6.1-2

- FLOW METER OPERATION
- OUTPUT 10mv/LB/HR
- 10mo. CONSTANT
- R_1 R_2
- CAPILLARY FLOW
- 1 SCCM/LB/HR SYS FLOW
- S_1 S_2
- .020"
- MAIN FLOW — MAIN FLOW
- SENSING ELEMENTS ARE BOTH 100 F ABOVE AMBIENT AT ZERO FLOW (APPROX 160 F)
- FLOW COOLS THE S_1 ELEMENT - REDUCING RESISTANCE
- HEAT ADDED BY S_1 CAUSES S_2 TEMPERATURE TO RISE - INCREASING RESISTANCE
- S_1 REDUCED RESISTANCE AND S_2 INCREASED RESISTANCE UNBALANCES THE BRIDGE CIRCUIT PRODUCING OUTPUT VOLTAGE PROPORTIONAL TO THE UNBALANCE
- AT FULL SCALE RANGE 5 SCCM (5 LB/HR SYS FLOW), S_1 TO S_2 DELTA T=100F
- HEATING PRODUCED BY S_1 AND S_2 LIMITED TO 50 MV PER FLOW METER
- HIGH SYS FLOWS >50 LB/HR OVERPOWERS THE HEATING CAPABILITY AND DELTA T (S_1 TO S_2) IS REDUCED
- AT 15 TO 20 TIMES FULL SCALE FLOW DELTA T (S_1 TO S_2) APPROACHES ZERO

INNER MOLD LINE — LEFT PLENUM — CREW MODULE

LOCATED BELOW HATCH

DEBRIS SCREEN — 0.20 PSID
DEBRIS SCREEN — 0.20 PSID

CABIN NEGATIVE PRESSURE RELIEF VALVE ITEM 1.86

FITTING ASSY, DISCONNECT, SWIVEL, 90°
.18
45° TYP
.06 TYP
VIBRO-ETCH FLOW DIRECTION

O_2 BLEED ORIFICE
EXTERNAL DETAILS

MN B — ATM PRESS CONTROL — PPO_2 C CAB 3A — PNL 015xD CB16
V_{MNB} 015

PPO_2 C 6.2

FITTING MATES WITH DISCONNECT
TAPERED EXPANDER PIN
FILTER SCREENS
FLARED UNION-ENDS
ELBOW TUBE, 90° SWIVEL, 37° FLARED
ORIFICE
JET BODY

O_2 BLEED ORIFICE
INTERNAL DETAILS

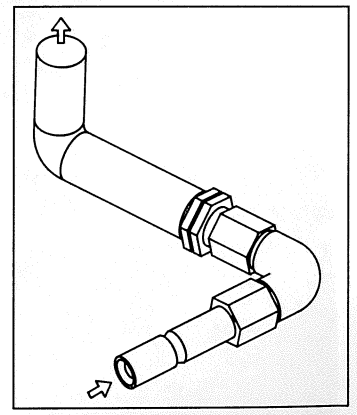

O_2 BLEED ORIFICE
OBLIQUE VIEW

O_2 BLEED ORIFICE SPEC FLOW RATES

CREW SIZE	O_2 SUPPLY PRESSURE PSIA	O_2 MASS FLOW RATE DESIRED	O_2 MASS FLOW RATE PROVIDED	
4,5	110.2 ± 10	.24 LB/HR	0.254	+0.052 -0.034 LB/HR
6,7	110.2 ± 10	.36 LB/HR	0.363	+0.064 -0.049 LB/HR

W Z 5 6.1-2	1	CABIN PRESSURE
F Z 4 6.1-2	2	PPO_2 A
F Z 4 6.1-2	3	PPO_2 B
I Z 6	20	PPO_2 C
W Z 7 6.1-2	8	SYS 1 N_2 TANK 1 T
W Z 7 6.1-2	9	SYS 1 N_2 TANK 2 T
W Z 6 6.1-2	18	SYS 1 N_2 TANK 3 T
W Z 5 6.1-2	19	SYS 1 N_2 TANK 4 T
V Z 7 6.1-2	10	SYS 1 N_2 TANK P
W Z 3 6.1-2	11	SYS 2 N_2 TANK 1 T
W Z 3 6.1-2	12	SYS 2 N_2 TANK 2 T
W Z 2 6.1-2	21	SYS 2 N_2 TANK 3 T
V Z 2 6.1-2	22	SYS 2 N_2 TANK 4 T
V Z 3 6.1-2	13	SYS 2 N_2 TANK P
O Z 4 6.1-2	14	EMER O_2 TANK T
O Z 4 6.1-2	15	EMER O_2 TANK P

AVG_PPO2

K(P13)

K(P21)

TP19

MNA 014 O_2 /N_2 CNT

PPO2

ITEM 1.

PN

1. PPO2A_ENA (V92J2131C), PPO2B_ENA (V92J2132) AND PPO2C ENA (J92J2133C) PROVIDE THE CAPABILITY TO INHIBIT PPO2A, PPO2B, AND PPO2C FROM THE GROUND OR THROUGH A COMP CHANGE (SPEC 60). USABLE PPO2 INPUTS ARE DETERMINED BY THE PPO2A_USE, PPO2B_USE, AND PPO2C_USE PARAMETERS. VALUES OF THESE PARAMETERS ARE DETERMINED AS FOLLOWS:

PPO2X_ENA X=A, B, OR C		PPO2X 'M' STATUS X=A, B, OR C		PPO2X_USE X=A, B, OR C
1	+	'M' STATUS OFF	=	1
1		'M' STATUS ON		0
0		'M' STATUS OFF		0
0		'M' STATUS ON		0

IF PPO2 ENABLE = 0 OR CAB P = 0, THEN A 'NOK' (NOT OKAY) MESSAGE IS DISPLAYED FOR O_2 CONCENTRATION (V92X2103X)

12. ITEM NO.'S REFER TO ROCKWELL HARDWARE NO.'S

11. CABIN PRESSURE BLEED VALVES (ITEM 1.87)
THESE VALVES ARE SERIES MOUNTED IN A COMMON HOUSING AND ARE USED TO VENT THE CABIN PRESSURE DOWN FOLLOWING THE PRELAUNCH CABIN LEAK CHECK AT 16.7 PSIA. CLOSING TIME ≤ 2 SEC WITH 16.7 PSIA VENTING TO 14.7 PSIA AT 70° F

10. POSITIVE PRESSURE RELIEF VALVES (ITEM 1.1)
THESE PRESSURE-COMPENSATED POPPET VALVES ARE SPRING LOADED AGAINST CABIN PRESSURE AND RELIEVE OVERBOARD INTO MIDBODY. MOTORIZED BUTTERFLY VALVES IN SERIES ARE PROVIDED TO CLOSE THE LINE IF THE RELIEF VALVE FAILS OPEN

9. FOR OV-102 ONLY, PPO2C WAS ORIGINALLY IN A METERED CIRCUIT AND REQUIRED A SIGNAL CONDITIONER TO AMPLIFY THE SIGNAL. THE OTHER VEHICLES WERE DESIGNED WITHOUT A METERED PPO2C CIRCUIT AND, THEREFORE, DO NOT NEED A SIGNAL CONDITIONER

8. IF A 'DIVIDE BY ZERO' CONDITION OCCURS, THE COMP WILL DISPLAY AN 'NOK' MEANING 'NOT OK'

7. PRELAUNCH: CABIN PRESSURE UL=15.5 PSIA
POST INSERT: CABIN PRESSURE UL=15.2 PSIA

6. O_2 BLEED ORIFICE: INSTALLED IN LEH O_2 5 QD POSTSLEEP FD2 REMOVED POSTSLEEP DEORBIT PREP DAY REINSTALLED FOR 1 DAY WAVE OFFS

5. REFER TO TABLE 6-1 FOR DRAWING REFERENCES

4. BFS OPS 0, OPS 1, OPS 3:
P_0 IS THE CABIN PRESS AT TIME ZERO WHILE P_{30} IS THE CABIN PRESS 30 SEC LATER. THE PRESSURES AND COMP ARE UPDATED EVERY 5 SEC. BFS, SM ALERT OCCURS IF CABIN LEAK RATE IS GREATER THAN -.12 PSIA/MIN

3. KLAXON ANNUNCIATES FOR LOSS OF CABIN PRESSURE ONLY; THEREFORE, THE NEGATIVE SIGN OF dP/dT IS ASSUMED

2. O_2 PARTIAL PRESSURE OPERATION- A DIFFUSION BARRIER, CATALYTIC ELECTRODE, BASIC ELECTROLYTE AND METAL COUNTER ELECTRODE ARE USED TO MEASURE OXYGEN FLOW THROUGH DIFFUSION BARRIER IN DIRECT PROPORTION TO PARTIAL PRESSURE. CHANGE IN ELECTROLYTE CONDUCTIVITY RESULTS IN A 0 TO 5VDC SIGNAL PROPORTIONAL TO OXYGEN

NOTES:

1. CABIN NEGATIVE PRESSURE RELIEF VALVES (ITEM 1.86)
THESE POPPET VALVES PROVIDE RELIEF FROM THE FORWARD FUSELAGE COMPARTMENT DURING ENTRY AFTER A CABIN DEPRESSURIZATION TO 8 PSIA. A REDUNDANT CAP IS PROVIDED TO PREVENT CABIN DECOMPRESSION IF A POPPET VALVE FAILS OPEN. MIN. FLOW 60 LB/HR AT .5 PSID. ΔP FOR AUTOMATIC CAP RELEASE 0.7 PSID. A PINHOLE IS DRILLED INTO CAP TO MAINTAIN 0.0 ΔP ACROSS CAP

*1 PCS 1

NATIONAL AERONAUTICS AND SPACE ADMINISTRATION LYNDON B. JOHNSON SPACE CENTER HOUSTON, TEXAS		SIGNATURE	DATE
PRESSURE CONTROL SYSTEM		DSGN L.M. BUCHANAN	1/19/83
		DR TOM LENERS	1/19/83
		ENGR P.J. WOODARD	
		APP	
DWG NO 6.1	SPACE SHUTTLE	APP	
	ALL	OMNIPLAN S.K. Kimbrow	11-20-91
SHEET 1 OF 2 PAGE	104.5 X 34	LTR E	PCN 1

BASIC REV E-1

DATE:	NAME:	VERSION:
DATE: 10/25/91	NAME: VSH	VERSION: BPT.5
DATE: 11/06/91	NAME: VSH	VERSION: BPT.6
DATE: 11/14/91	NAME: MDU	VERSION: INK.9

O_2 REGULATOR ASSEMBLY 1

O_2 REG INLET

MAX FLOW 75 LB/HR

SYS 1

100 ± 10 PSIG

TP4

O_2 REG 1

245 PSIG

215 RESEAT

TO C&W

SM SYS SUMM 1 DISP 066

SYS 1 O_2 FLOW

0 TO 5 LB/HR

1 S/S

C&W

VG1 P2102A

SYS 1 O_2 SUPPLY PRESS

0 TO 1500 PSIA

1 S/S

PNL M01OW

ITEM 1.7

O_2 REG INLET CLOSED= MAX ALLOWABLE LEAKAGE OF O_2 REG ASSEMBLY=10 SCCM (+2.70 PSI/MIN)

PAYLOAD O_2

ITEM 1.27

ITEM 1.89

7 LB/HR MAX .4 LB/HR NOMINAL

CHECK VALVE ALLOWABLE SPEC LEAKAGE 0.2 SCCM (0.57 PSI/MIN)

ITEM 1.8

2 PSID AT 75 LB/HR

VG1 P2115A

O_2 REG 1 PRESS

0 TO 300 PSIA

1 S/S

SM DISP 066

TP18

14.7 PSI CABIN REG INLET

MAX FLOW 75 LB/HR

14.7 ± .2 PSIA

CABIN REG 1

.75 TO 75 LB/HR TP 11 HIGH FLOW

0 TO .75 LB/HR TP 12 LOW FLOW

VG1 P2104A

CABIN REG 1 INLET PRESS

0 TO 300 PSIA

1 S/S

PAYLOAD N_2

ITEM 1.28

10 LB/HR MAX

X_O = 576

TO PAYLOAD INTERFACE PANEL

MID FUSELAGE

H_2O TK N_2 REG INLET

SYSTEM 1 OPEN

ITEM 1.11

MAX FLOW 75 LB/HR

8 ± .2 PSIA

EMER REG 1

.75 TO 75 LB/HR TP 15 HIGH FLOW

0 TO .75 LB/HR TP 16 LOW FLOW

ITEM 1.82

LEH O_2 SUPPLY 1

LEH O_2 REG 1

LEH O_2 SUPPLY 2

LEH O_2 REG 2

PNL C7

PNL C6

PNL M032M

PNL M069M

LEH O2 1, 2, 3, & 4

LEH O2 5 & 6

LEH O2 7 & 8

(TYPICAL 1 OF 8)

N_2 XOVER

PNL M01OW ITEM 1.83

EVLSS O_2 SPLY PRESS METER

VG4 P2202A

EVLSS O_2 SPLY PRESS

0 TO 1500 PSIA

1 S/S

EMU 1

EMU 2

EMU OXYGEN

POS OXYGEN

PNL AV82B

SCU-1 TP141

SCU-2 TP143

TP140

TP142

DIRECT O_2

DIRECT OXYGEN

PNL C5

PNL C8

MN A

MN B

ATM PRESS CONTROL

O_2/N_2 CNTLR 1

O_2/N_2 CNTLR 2

PNL 014+D CB19

PNL 015+D CB18

V_{MNA} 014

V_{MNB} 015

PPO_2 CNTLR

SYS 1

SYS 2

NORM

EMER

PNL M01OW

VG1 S2140E

SYS 1 PPO_2 MODE SEL

1=NORM

1 S/S

VG1 S2142E

SYS 2 PPO_2 MODE SEL

1=NORM

1 S/S

10K

TO PASS SM COMPUTER

SM SYS SUMM 1 DISP 066

PPO_2 SENSOR A

PPO_2 SENSOR B

AMP

VG1 P2511A

PPO_2 A

0 TO 5 PSIA

1 S/S

C&W

VG1 P2513A

PPO_2 B

O_2/N_2 CONTROLLER 1

O_2/N_2 CONTROLLER 2

POWER SUPPLY

DET

DR

2.2 PSIA

3.2 PSIA

ITEM 1.13

ATM PRESS CONTROL

PPO_2 SNSR/VLV

NORM

REVERSE

PNL L2 S17

VG1 S2350E

PPO_2 SNSR/VLV NORMAL

1=NORM

1 S/S

5.1K

ATM PRESS CONTROL

O_2/N_2 CNTLR VLV

SYS 1

SYS 2

AUTO

PNL L2 S16

PNL L2 S19

VG1 S2371E

SEL SYS 1 N_2 FLOW AUTO

1=AUTO

1 S/S

VG1 S2376E

SEL SYS 2 N_2 FLOW AUTO

VG1 S2370E

SEL SYS 1 N_2 FLOW ON

VG1 S2375E

SEL SYS 2 N_2 FLOW ON

1=ON

1 S/S

+5VDC

DSC OF 1

DSC OF 2

VG1 X2372E

SYS 1 O_2/N_2 CNTLR VLV

1=OPEN

1 S/S

C

VG1 X2377E

SYS 2 O_2/N_2 CNTLR VLV

SM DISP 066

14.7 PSI CABIN REG INLET

MAX FLOW 75 LB/HR

ITEM 1.2

14.7 ± .2 PSIA

CABIN REG 2

.75 TO 75 LB/HR TP 10 HIGH FLOW

0 TO .75 LB/HR TP 9 LOW FLOW

VG1 P2204A

CABIN REG 2 INLET PRESS

0 TO 300 PSIA

1 S/S

PAYLOAD N_2

SYS 2

ITEM 1.28

10 LB/HR MAX

H_2O TK N_2 REG INLET

SYSTEM 2 OPEN

PAYLOAD O_2

ITEM 1.27

ITEM 1.89

7 LB/HR MAX .4 LB/HR NOMINAL

X_O=576 MID FUSELAGE

TO PAYLOAD INTERFACE PANEL

VG1 P2215A

O_2 REG 2 PRESS

0 TO 300 PSIA

1 S/S

SM DISP 066

TP17

ITEM 1.8

2 PSID AT 75 LB/HR

CHECK VALVE ALLOWABLE SPEC LEAKAGE 0.2 SCCM (0.57 PSI/MIN)

ITEM 1.82

MAX FLOW 75 LB/HR

8 ± .2 PSIA

EMER REG 2

.75 TO 75 LB/HR TP 14 HIGH FLOW

0 TO .75 LB/HR TP 13 LOW FLOW

O_2 REGULATOR ASSEMBLY 2

O_2 REG INLET

SYS 2 O_2 SUPPLY PRESS

0 TO 1500 PSIA

1 S/S

O_2 REG 2

100 ± 10 PSIG

245 PSIG

215 RESEAT

ITEM 1.83

O_2 REG INLET CLOSED= MAX ALLOWABLE LEAKAGE OF O_2 REG ASSEMBLY=10 SCCM (+2.87 PSI/MIN)

SM SYS SUMM 1 DISP 066

VG1 P2203A

SYS 2 O_2 FLOW

0 TO 5 LB/HR

1 S/S

C&W

TO C&W

TP1

TP2

TP3

TP5

1. TWO STAGE DESIGN INSURES THAT NO MORE THAN 300 LB/HR CAN ENTER THE CREW COMPARTMENT IF AN OUTLET LINE BREAKS FULLY OPEN

17. ITEM NUMBERS REFER TO ROCKWELL HARDWARE NUMBERS

18. LOSS OF EITHER CONTROL BUS PRECIPITATES LOSS OF THE SWITCH FUNCTION

19. IF O2/N2 CNTLR 1 OR O2/N2 CNTLR 2 POWER IS LOST THE AUTO AND CLOSE FUNCTIONS CAN BE REGAINED BY SWITCHING THE PPO2 SNSR/VLV TO REVERSE

20. O_2 PARTIAL PRESSURE OPERATION- A DIFFUSION BARRIER, CATALYTIC ELECTRODE, BASIC ELECTROLYTE AND METAL COUNTER ELECTRODE ARE USED TO MEASURE OXYGEN FLOW THROUGH DIFFUSION BARRIER IN DIRECT PROPORTION TO PARTIAL PRESSURE. CHANGE IN ELECTROLYTE CONDUCTIVITY RESULTS IN A 0 TO 5VDC SIGNAL PROPORTIONAL TO OXYGEN PARTIAL PRESSURE

21. RATED 10 LB/HR AT 300 PSI UPSTREAM PRESSURE

22. WATER PRESSURIZATION SYSTEM NITROGEN IS CHANNELED TO 14.7 REGULATOR TO PROVIDE A DESIRED BACKPRESSURE FUNCTION. WHEN THE REGULATOR IS CLOSED, 16 PSIG NITROGEN IMMOBILIZES INTERNAL VALVE ELEMENTS TO MINIMIZE LIFE CYCLE COMPONENT WEAR INDUCED BY RANDOM ASCENT VIBRATION

11. REFER TO TABLE 6-1 FOR DRAWING REFERENCES

A. MANUAL VALVES USED TO BLEED DOWN LINE PRESSURE AT FSS FOR REMOVAL/SERVICE. (GROUND OPS ONLY)

B. ASCENT/ENTRY: SYS 1, 2-CL ORBIT: SYS 1(2)- OP(CL)

C. ASCENT/ENTRY: SYS 1(2)- OP(CL) ORBIT: SYS 1(2)- AUTO(CL)

D. CABIN GAS AT PPO2=3.08 PSI, P_T=14.7 PSI, VOL=2325 FT^3, O_2=36.2 LBM, N_2=136.6 LBM, AIR=172.8 LBM CABIN + AIRLOCK GAS AT PPO2=3.08 PSI, P_T=14.7 PSI, VOL=2475 FT^3, O_2=38.6 LBM, N_2=146.0 LBM, AIR=184.6 LBM

E. PPO_2 SENSOR LIFE 12,000 HRS AMPLIFIER OUTPUT ADJUSTABLE (GROUND OPS ONLY)

F. O_2/N_2 CNTLR HAS TWO CONTROL POINTS:
1. NORM - 3.2 ±.25$_2$ CONTROLLER PROVIDES OUTPUT SIGNAL WHEN PPO_2 REACHES 3.45 PSIA AND RETURNS TO ZERO WHEN PPO_2 REACHES 2.95 PSIA
2. EMER - 2.2 ±.25$_2$ CONTROLLER PROVIDES OUTPUT SIGNAL WHEN PPO_2 REACHES 2.45 PSIA AND RETURNS TO ZERO WHEN PPO_2 REACHES 1.95 PSIA (SWITCH POSITION NOT USED)

G. $O_2(N_2)$ CONNECTIONS MANIFOLDED SEPARATELY AND ROUTED TO PAYLOAD INTERFACE PANEL

H. VOLUME OF EACH TANK IS 8181 IN^3, BURST P 4950 PSIG

J. RESERVED

NOTES: K. ASCENT/ENTRY: SYS 1, 2-OP ORBIT: SYS 1(2)-OP(CL)

*1 PCS 2

SIGNATURE	DATE	NATIONAL AERONAUTICS AND SPACE ADMINISTRATION LYNDON B. JOHNSON SPACE CENTER HOUSTON, TEXAS
DSGN LAURIE BUCHANAN	1/19/84	
DR TOM LENERS	1/19/84	PRESSURE CONTROL SYSTEM
ENGR P.J. WOODARD		
ENGR P.J. Woodard	11/19/91	
APP [illegible]	11/19/91	
APP		SPACE SHUTTLE / DWG NO 6.1
OMNIPLAN S.K. Kimbrell	11-20-91	ALL
LTR E PCN 1		126.5 X 34 / PAGE / SHEET 2 OF 2

BASIC REV E-1

S R Q P O N M L K J

MID FUSELAGE | CREW MODULE

X_O = 576

V_{MNA} MPB1

V45 X4080E OF4 N/A — SYS 1 GRYO O_2 ECS SUPPLY VLV — 1=OPEN 1 S/S

OPEN: B, GSE, OPEN: A

10A, 10A

ITEM 1.5 — 10µ

FREON LOOP 1 — HZ 7.1

23.9 ±1 LBS/HR MAX O_2 FLOW

MN A — ATM PRESS CONTROL — N_2 REG INLET 1 — 3A — PNL 014D CB21

V_{MNA} 014

ATM PRESS CONTROL — N_2 SYS 1 — REG INLET — OP/CL — CLOSE▲ — PNL L2 S14

5.1K

V61 X2321E OF4 N/A — N_2 REG 1 INLET VLV OPEN — 1=OPEN 1 S/S

V61 X2415E OF4 N/A — N_2 REG 1 INLET VLV CL — 1=CLOSED 1 S/S

N_2 REG INLET CLOSED± MAX ALLOWABLE LEAKAGE OF N_2 REG ASSEMBLY IS 15 SCCM (+0.31 PSI/MIN) — 18

N_2 PRESS REG AND RLF VALVE ASSEMBLY 1

400 ± 50 PSIG — 200 ±15 PSIG — 295 PSIG 245 RESEAT

N_2 REG 1 — TP32 — TP34

ITEM 1.25 MAX FLOW 75 LB/HR

ITEM 1.24

ITEM 1.29

TO MMU FSS: Y_O=94.0, X_O=630.5, Z_O=397.0, Y_O=-94.0

1.2K

MN A — ATM PRESS CONTROL — N_2 SUPPLY 1 — 3A — PNL 014D CB18

V_{MNA} 014

V61 X2434E OF1 N/A — MMU GN_2 SPLY ISOL VLV A-OP — 1=OPEN 1 S/S

V61 X2436E OF1 N/A — MMU GN_2 SPLY ISOL VLV A-CL — 1=CLOSED 1 S/S

MN B — ATM PRESS CONTROL — N_2 SUPPLY 2 — 3A — PNL 015D CB17

V_{MNB} 015

V61 X2431E OF1 N/A — MMU GN_2 SPLY ISOL VLV B-OP — 1 = OPEN 1 S/S

V61 X2435E OF1 N/A — MMU GN_2 SPLY ISOL VLV B-CL — 1=CLOSED 1 S/S

TO MMU FSS: Y_O=94.0, X_O=630.5, Z_O=397.0, Y_O=-94.0

ATM PRESS CONTROL — N_2 SYS 1 — SUPPLY — OP/CL — OPEN▼ — CLOSE▲ — PNL L2 S13

ATM PRESS CONTROL — N_2 SYS 2 — SUPPLY — OP/CL — OPEN▼ — CLOSED▲ — PNL L2 S21

V61 X2323E OF4 N/A — SYS 1 N_2 SPLY VLV OPEN — 1=OPEN 1 S/S

V61 X2416E OF4 N/A — SYS 1 N_2 SPLY VLV CLOSED — 1=CLOSED 1 S/S

V61 X2319E OF4 N/A — SYS 2 N_2 SPLY VLV OPEN — 1 = OPEN 1 S/S

V61 X2421E OF4 N/A — SYS 2 N_2 SPLY VLV CLOSED — 1=CLOSED 1 S/S

N_2 FILL 40V61PD152 — 10µ — GSE MIDBODY

FZ 6.5 — TO VACUUM VENT LINE

MN C — ATM PRESS CONTROL — O_2 EMER — 3A — PNL 016D CB16

V_{MNC} 016

ATM PRESS CONTROL — O_2 EMER — OP/CL — OPEN▼ — CLOSE▲ — PNL L2 S12

V61 X2163E OF4 N/A — EMER O_2 SPLY VLV OPEN — 1=OPEN 1 S/S

V61 X2165E OF4 N/A — EMER O_2 SPLY VLV CLOSED — 1=CLOSED 1 S/S

5.1K

MAX FLOW 150 LB/HR — 300 ± 15 PSIG — EMER O_2 REG — TP36 TP37 — NC

1250 PSIG 1075 RESEAT

EMER O_2 SUPPLY RLF ASSEMBLY — ITEM 1.126

EMER O_2 — 3 — T — 14 TO PASS SM COMPUTER

V61 T2216A OF1 OH2 — EMER O_2 TANK TEMP — -75 TO +175° F — 1 S/S

MISSION KIT — FZ 6.1-1

V61 P2161A OF2 OH2 — EMER O_2 TANK PRESS — 0 TO 3500 PSIA — 1 S/S

15 TO SM COMPUTER — FZ 6.1-1

10µ GSE

N_2 PRESS REG AND RLF VALVE ASSEMBLY 2

400 ± 50 PSIG — 200 ±15 PSIG — 295 PSIG 245 RESEAT

N_2 REG 2 — TP33 — TP35

ITEM 1.25 MAX FLOW 75 LB/HR

N_2 REG INLET CLOSED± MAX ALLOWABLE LEAKAGE OF N_2 REG ASSEMBLY IS 15 SCCM (+0.21 PSI/MIN) — 18

ITEM 1.24

ITEM 1.29

FREON LOOP 2 — HZ 7.1

ITEM 1.5 — 10µ

V45 X4083E OF4 N/A — SYS 2 GRYO O_2 ECS SUPPLY VLV — 1=OPEN 1 S/S

OPEN: B, GSE, OPEN: A

10A, 10A

12.5 ±.5 LBS/HR MAX O_2 FLOW

12.5 ±.5 LBS/HR MAX O_2 FLOW

MN B — ATM PRESS CONTROL — N_2 REG INLET 2 — 3A — PNL 015D CB20

V_{MNB} 015

5.1K

ATM PRESS CONTROL — N_2 SYS 2 — REG INLET — OP/CL — OPEN▼ — CLOSE▲ — PNL L2 S22

V61 X2420E OF4 N/A — N_2 REG 2 INLET VLV CL — 1=CLOSED 1 S/S

V61 X2328E OF4 N/A — N_2 REG 2 INLET VLV OPEN — 1=OPEN 1 S/S

2 PSID AT 75 LB/HR ITEM 1.6 10µ — TP2

V61 P2310A OF3 OF3 — N_2 REG 1 PRESS — 0 TO 300 PSIA — 1 S/S

SM DISP 066

ITEM 1.9 — 10µ — 2 PSID AT 75 LB/HR

SM SYS SUMM 1 DISP 066

V61 R2553A OF1 OF1 — SYS 1 N_2 FLOW — 0 TO 5 LB/HR — 1 S/S C&W

TO C&W

V61 S2100E OF1 N/A — O_2 XOVR SYS 1 OPEN — 1=OPEN 1 S/S

MN A — ATM PRESS CONTROL — O_2 XOVR 1 — 3A — PNL 014D CB20

V_{MNA} 014

ATM PRESS CONTROL — O_2 XOVR — SYS 1 — OPEN — CLOSE — PNL L2 S15

5.1K

NC — ITEM 1.19

V61 P2166A OF3 OF3 — EMER O_2 REG PRESS — 0 TO 1500 PSIA — 1 S/S

O_2 EMER OPEN — CLOSE — PNL M010W — NC

MN B — ATM PRESS CONTROL — O_2 XOVR 2 — 3A — PNL 015D CB19

V_{MNB} 015

ATM PRESS CONTROL — O_2 XOVR — SYS 2 — OPEN — CLOSE — PNL L2 S18

6.1K

V61 S2200E OF3 N/A — O_2 XOVR SYS 2 OPEN — 1=OPEN 1 S/S

ITEM 1.19 — NC

V61 P2410A OF2 OF2 — N_2 REG 2 PRESS — 0 TO 300 PSIA — 1 S/S

SM DISP 066

ITEM 1.9 — 10µ — 2 PSID AT 75 LB/HR

SM SYS SUMM 1 DISP 066

V61 R2554A OF2 OF2 — SYS 2 N_2 FLOW — 0 TO 5 LB/HR — 1 S/S C&W

TO C&W

SM SYS SUMM 1 DISP 066

V61 R2205A OF2 OF2 — SYS 2 O_2 FLOW — 0 TO 5 LB/HR — 1 S/S C&W

TO C&W

TP1 — ITEM 1.6 — 10µ — 2 PSID AT 75 LB/HR

LEH O_2 SUPPLY 1 — OPEN — CLOSE — PNL C7

MAX FLOW 75 LB/HR — 100 ±10 PSIG — TP1 — 10µ — LEH O_2 REG 1 — 245 PSIG — 215 RESEAT

LEH O_2 SUPPLY 2 — OPEN — CLOSE — PNL C7

MAX FLOW 75 LB/HR — 100 ±10 PSIG — TP2 — 10µ — LEH O_2 REG 2 — 245 PSIG — 215 RESEAT

EVLSS O_2 SPLY PRESS METER — HZ 6.3

V64 P0202A OF3 OF3 — EVLSS O_2 SPLY PRESS — 0 TO 1500 PSIA — 1 S/S

EMU 1 — OXYGEN — OPEN — CLOSE — PNL AW82B

EMU 1 — EMU OXYGEN — POS OXYGEN — PNL AW82B — SCU-1 TP141 — HZ 6.3 TP140

EMU 2 — OXYGEN — OPEN — CLOSE — PNL AW82B

EMU 2 — EMU OXYGEN — POS OXYGEN — PNL AW82B — SCU-2 TP143 — HZ 6.3 TP142

SM SYS SUMM 1 DISP 066

OZ 5 — 16 — SM SYS SUMM 1 DISP 066

OZ 2 6.1-1 — OZ 4 6.1-1 — TO C&W

OZ 3 — OZ 2 6.1-1

OZ 1 — OZ 2 6.1-1

MID FUSELAGE | CREW MODULE

X_O = 576

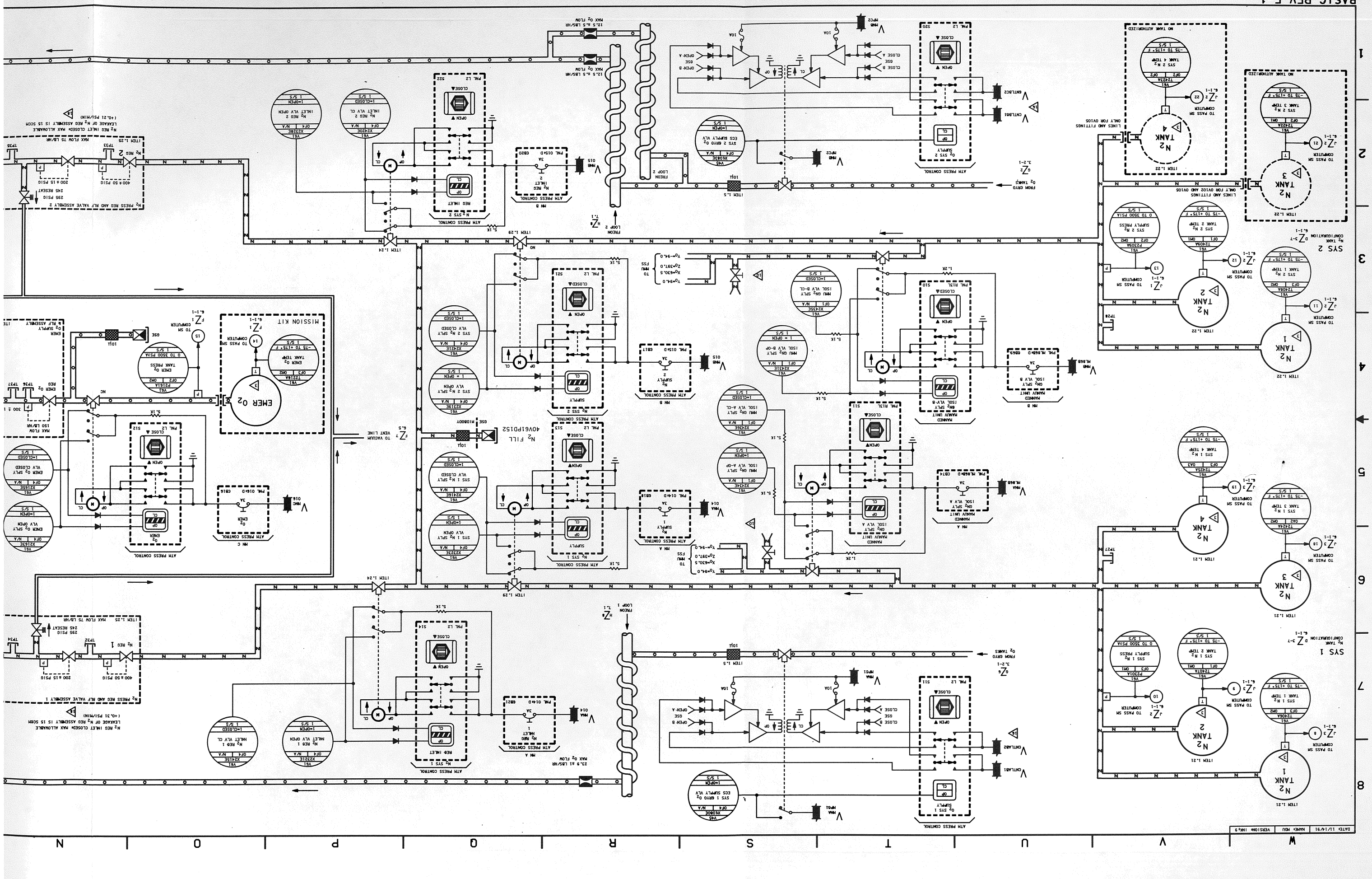
SYS 2
SYS 1
ATM PRESS CONTROL
MANNED MAKUP UNIT
ISOL VLV B
ISOL VLV A
ISOL VLV A-CL
ISOL VLV B-CL
ISOL VLV A-OP
ISOL VLV B-OP
ITEM L.22
ITEM L.21
ITEM L.24
ITEM L.25
ITEM L.29
ITEM L.5
TO VACUUM VENT LINE
FROM GHE O2 TANKS
FREON LOOP 2
FREON LOOP 1
MAX O2 FLOW
MAX FLOW 75 LB/HR
MAX FLOW 150 LB/HR
LINES AND FITTINGS ONLY FROM OV102 AND OV105
NO TANK AUTHORIZED
TO PASS SM COMPUTER
TO SM COMPUTER
TO PASS SM/GHE
TO PASS SM/GHE COMPUTER
TO SM/GHE
TANK 1 TEMP
TANK 2 TEMP
TANK 3 TEMP
TANK 4 TEMP
SUPPLY PRESS
TANK CONFIGURATION
MISSION KIT
EMER O2
EMER O2 TANK PRESS
EMER O2 TANK TEMP
ATM PRESS CONTROL
MN A
MN B
MN C
REG INLET
N2 REG 1
N2 REG 2
N2 TANK 1
N2 TANK 2
N2 TANK 3
N2 TANK 4
N2 SYS 1
N2 SYS 2
O2 SYS 1
O2 SYS 2
N2 FILL
N2 PRESS REG AND RLF VALVE ASSEMBLY 1
N2 PRESS REG AND RLF VALVE ASSEMBLY 2
N2 REG INLET CLOSEDX MAX ALLOWABLE LEAKAGE OF N2 REG ASSEMBLY IS 15 SCCM (+0.31 PSI/MIN)
N2 REG INLET CLOSEDX MAX ALLOWABLE LEAKAGE OF N2 REG ASSEMBLY IS 15 SCCM (+0.21 PSI/MIN)
400 ± 50 PSIG
200 ± 15 PSIG
295 PSIG
245 RESET
MAX O2 FLOW
MAX N2 FLOW
23.9 ± 1 LBS/HR MAX O2 FLOW
12.5 ± 5 LBS/HR MAX O2 FLOW
DATE= 11/14/91
NAME= KDU
VERSION= IND=9

BASIC REV E

*2 ARS AIR

NATIONAL AERONAUTICS AND SPACE ADMINISTRATION LYNDON B. JOHNSON SPACE CENTER HOUSTON, TEXAS	SIGNATURE	DATE	
	DOSH JUDITH B. HELLIS	6/25/19	
	CM		
	ENGR N. PAPALIA		ATMOSPHERE CIRCULATION
	APP	SPACE SHUTTLE	DWG NO 6.2
	OWNPLAN	ALL	SIZE 124.5 X 34
	LTR E	PCN	SHEET 1 OF 1

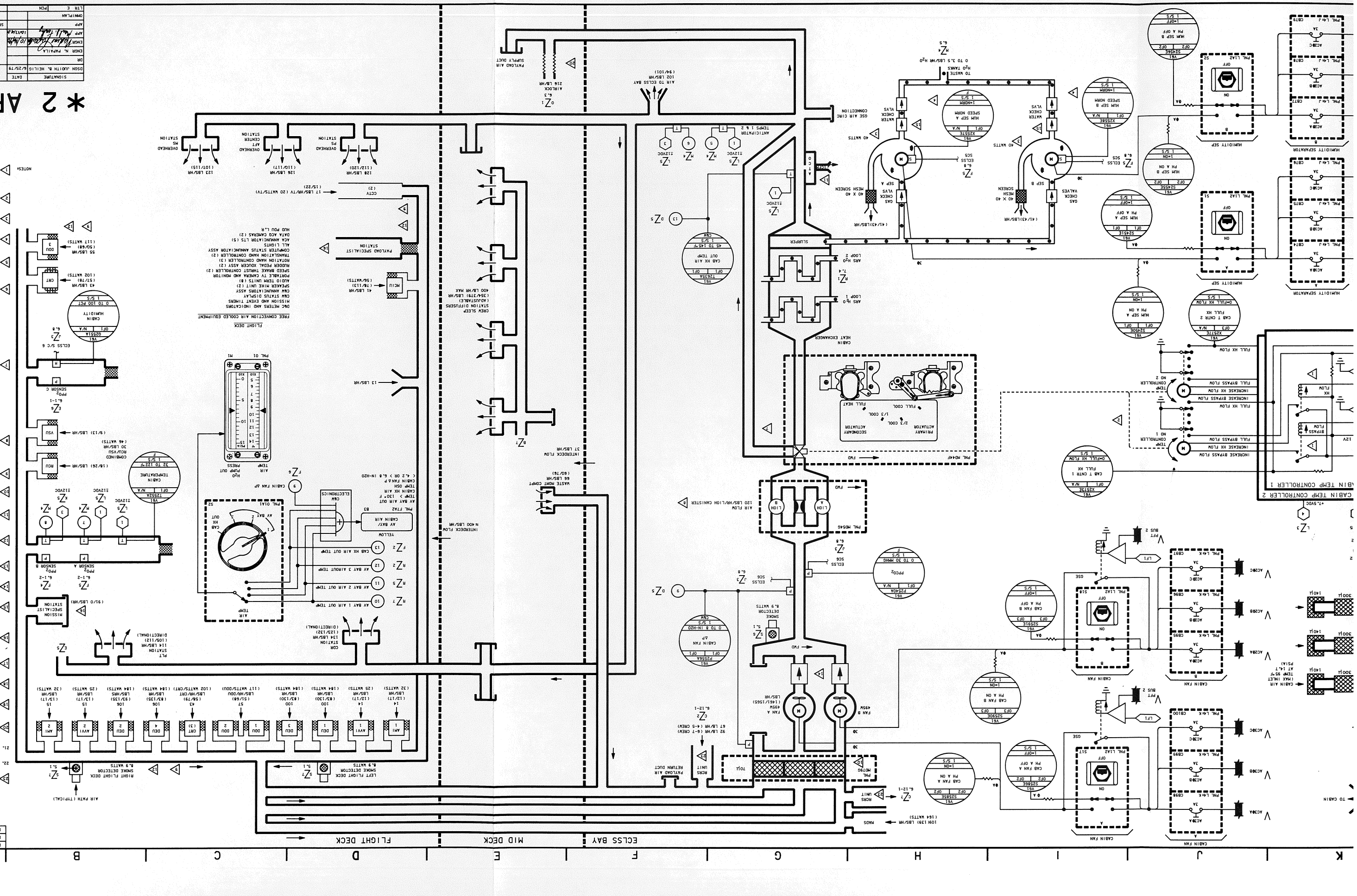

NOTES:

1. REPRESENTATION OF TRIAC CONTROLLED SOLID STATE RELAYS
2. ONLY ONE SEPARATOR REQUIRED AT A TIME. 37 LBS/HR OF AIR RETURNED INTO ECLSS BAY. GOUDREAU CORP0180, SYSH 6470
3. ONLY ONE MOTOR AT A TIME CAN BE MECHANICALLY CONNECTED TO THE VALVE, TO USE THE ALTERNATE MOTOR TO DRIVE THE VALVE REQUIRES A MANUAL SWITCHOVER OF LINKAGE
4. IMU FAN SPEED RANGE FOR NORMAL SPEED INDICATION 10,000 TO 12,720 TO 13,200 RPM, NOMINAL SPEED 11,300 RPM GOUDREAUMATION SPO1180 SYAS 7231 SYHS 6416
5. HUM SEP MIN SPEED INDICATION 5430 RPM, SPO1180 SYAS 6416 NOMINAL SPEED 11,300 RPM GOUDREAUMATION SYHS 6470
6. ONLY ONE SEPARATOR REQUIRED AT A TIME. 37 LBS/HR OF AIR RETURNED INTO ECLSS BAY. GOUDREAUMATION SPO1180, SYSH 6470
7. CHECK VALVE OPENS AT A DELTA PRESSURE OF NO MORE THAN 2.0 IN H2O. GOUDREAUMATION SPO1180 SYAS 6431
8. CHECK VALVE OPENS AT A DELTA PRESSURE OF NO MORE THAN 2.0 IN H2O. GOUDREAUMATION SPO1180, SYAS 6456
9. THE CHECK CRACKS AT 6.0 PSID, FULL FLOW AT 9.5 PSID. GOUDREAUMATION SPO1180, SYAS 6456
10. THE ADJUSTMENT OF THE AIR IS A GROUND OPERATION. THE AIR FLOW IS SPLIT BETWEEN THE PAYLOAD AND THE MISSION STATION AS NEEDED. THE TOTAL FLOW BETWEEN THE TWO STATIONS IS 406 LB/HR
11. ALL ELECTRICAL EQUIPMENT POWER AND USAGE ARE QUOTED FROM L1-3-DF8650-002A AND L1-3-DF8650-024
12. ALL EQUIPMENT IS POWER AND COOLED BY ONE OF TWO REDUNDANT SYSTEMS
13. DOCUMENTATION SEN-ECS-86-1017
14. REFER TO TABLE 6-1 FOR DRAWING REFERENCE
15. FLEX DUCT IS INSIDE CREW COMPARTMENT DURING ASCENT AND ENTRY, WHILE ON ORBIT THE FLEX DUCT IS PUT INSIDE THE AIRLOCK
16. ALL ARS PARMS EXCEPT CAB HX AIR OT ARE ±3% ACCURACY
17. ONLY DV102 AND DV105 HAVE THE DUCT WORK FOR THE REGENERABLE CO2 REMOVAL SYSTEM
18. DUCT FLOW RATES (MINIMUM UNLESS OTHERWISE NOTED) ARE BASED ON SEH-ECS-86-0017. SOME DATA ARE INDICATED IN PARENTHESES AND ARE TYPICAL NOMINAL MIN/MAX FLOW RATES WITH WITHOUT MSS AND PSS FLOW. RESPECTIVELY
19. VACUUM CLEANER, CABIN FAN FILTER TOOL, IMU FAN FILTER TOOL IN MPSTR
20. AMBIENT TEMPERATURE CATALYTIC OXIDIZER FOR CARBON MONOXIDE REMOVAL. MAXIMUM CO REMOVAL RATE: 0.66 GM/HR
21. SO X 250 MESH .0055 X .0043 INCH DIAMETER WIRE. 40± NOMINAL/70± ABSOLUTE. DEBRIS SCREENS ARE LOCATED AT THE LBU INLET PORTS.

DATE 09/05/90	NAME MDU	VERSION BPT.7	
DATE 10/01/90	NAME MDU	VERSION BPT.8	
DATE 10/06/90	NAME CAM	VERSION INK.2	

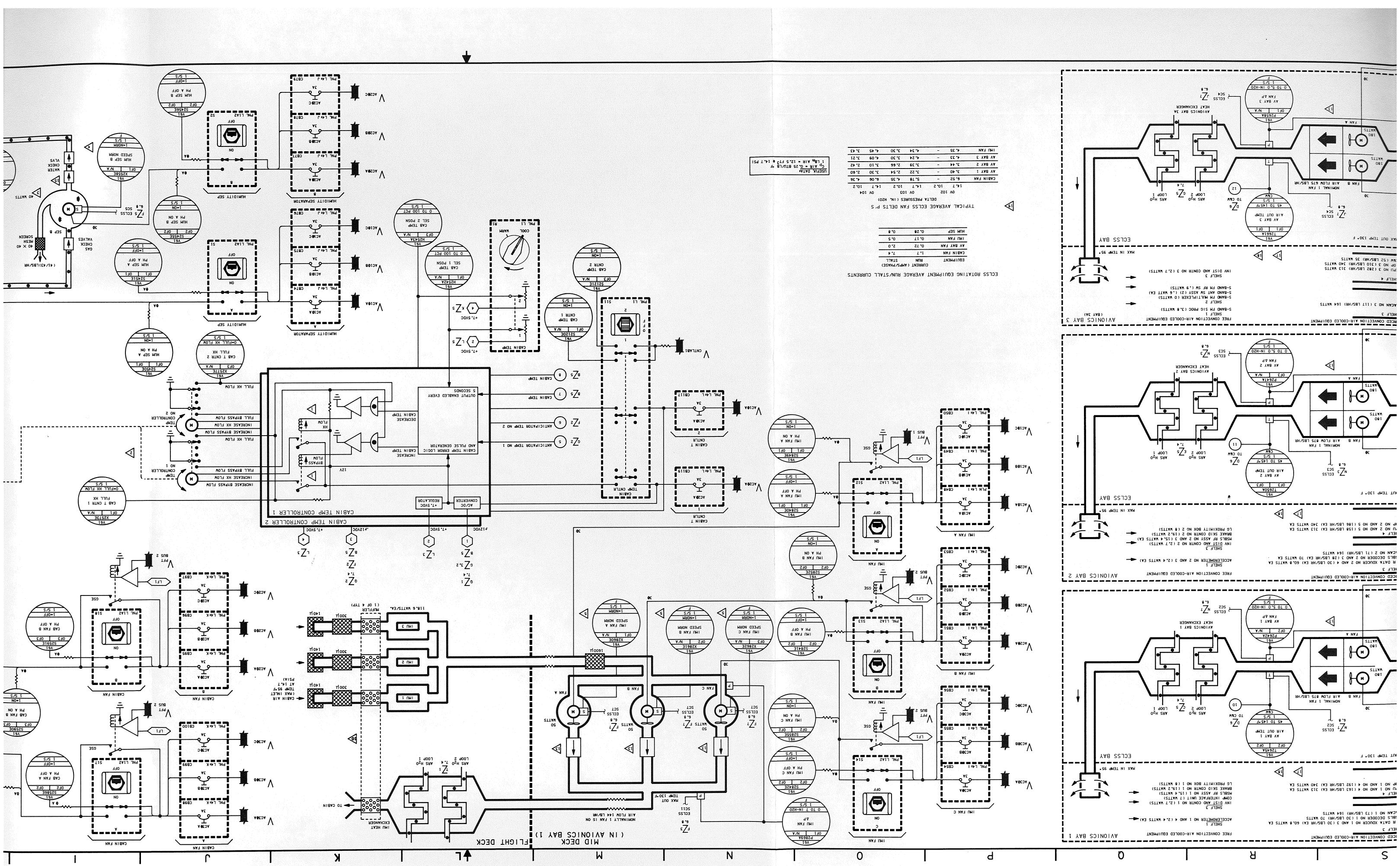
CABIN TEMP CONTROLLER 1
CABIN TEMP CONTROLLER 2
MID DECK
(IN AVIONICS BAY 1)
FLIGHT DECK
AVIONICS BAY 1
AVIONICS BAY 2
AVIONICS BAY 3
ECLSS BAY
CABIN FAN
IMU FAN
HUMIDITY SEPARATOR
HUMIDITY SEP
CABIN TEMP
AVIONICS BAY 2 HEAT EXCHANGER
AVIONICS BAY 3 HEAT EXCHANGER
FREE CONVECTION AIR-COOLED EQUIPMENT
NOMINAL 1 FAN AIR FLOW 675 LBS/HR
MAX IN TEMP 95°F
MAX OUT TEMP 130°F
ECLSS RACK
ECLSS RACK 4
ECLSS RACK 3
ECLSS RACK 2
ECLSS RACK 1
ECLSS RACK 5
ECLSS RACK 6
ECLSS RACK 7
ECLSS RACK 8
ECLSS RACK 9
ECLSS RACK 10
ECLSS RACK 11
ECLSS RACK 12
ECLSS RACK 13
ECLSS RACK 14
ECLSS RACK 15
ECLSS RACK 16
ECLSS RACK 17
ECLSS RACK 18
ECLSS RACK 19
ECLSS RACK 20
ECLSS RACK 21
ECLSS RACK 22
ECLSS RACK 23
ECLSS RACK 24
ECLSS RACK 25
ECLSS RACK 26
ECLSS RACK 27
ECLSS RACK 28
ECLSS RACK 29
ECLSS RACK 30
ECLSS RACK 31
ECLSS RACK 32
ECLSS RACK 33
ECLSS RACK 34
ECLSS RACK 35
ECLSS RACK 36
ECLSS RACK 37
ECLSS RACK 38
ECLSS RACK 39
ECLSS RACK 40
ECLSS RACK 41
ECLSS RACK 42
ECLSS RACK 43
ECLSS RACK 44
ECLSS RACK 45
ECLSS RACK 46
ECLSS RACK 47
ECLSS RACK 48
ECLSS RACK 49
ECLSS RACK 50
ECLSS RACK 51
ECLSS RACK 52
ECLSS RACK 53
ECLSS RACK 54
ECLSS RACK 55
ECLSS RACK 56
ECLSS RACK 57
ECLSS RACK 58
ECLSS RACK 59
ECLSS RACK 60
ECLSS RACK 61
ECLSS RACK 62
ECLSS RACK 63
ECLSS RACK 64
ECLSS RACK 65
ECLSS RACK 66
ECLSS RACK 67
ECLSS RACK 68
ECLSS RACK 69
ECLSS RACK 70
ECLSS RACK 71
ECLSS RACK 72
ECLSS RACK 73
ECLSS RACK 74
ECLSS RACK 75
ECLSS RACK 76
ECLSS RACK 77
ECLSS RACK 78
ECLSS RACK 79
ECLSS RACK 80
ECLSS RACK 81
ECLSS RACK 82
ECLSS RACK 83
ECLSS RACK 84
ECLSS RACK 85
ECLSS RACK 86
ECLSS RACK 87
ECLSS RACK 88
ECLSS RACK 89
ECLSS RACK 90
ECLSS RACK 91
ECLSS RACK 92
ECLSS RACK 93
ECLSS RACK 94
ECLSS RACK 95
ECLSS RACK 96
ECLSS RACK 97
ECLSS RACK 98
ECLSS RACK 99
ECLSS RACK 100
ECLSS RACK 101
ECLSS RACK 102
ECLSS RACK 103
ECLSS RACK 104
ECLSS RACK 105
ECLSS RACK 106
ECLSS RACK 107
ECLSS RACK 108
ECLSS RACK 109
ECLSS RACK 110
ECLSS RACK 111
ECLSS RACK 112
ECLSS RACK 113
ECLSS RACK 114
ECLSS RACK 115
ECLSS RACK 116
ECLSS RACK 117
ECLSS RACK 118
ECLSS RACK 119
ECLSS RACK 120
ECLSS RACK 121
ECLSS RACK 122
ECLSS RACK 123
ECLSS RACK 124
ECLSS RACK 125
ECLSS RACK 126
ECLSS RACK 127
ECLSS RACK 128
ECLSS RACK 129
ECLSS RACK 130
ECLSS RACK 131
ECLSS RACK 132
ECLSS RACK 133
ECLSS RACK 134
ECLSS RACK 135
ECLSS RACK 136
ECLSS RACK 137
ECLSS RACK 138
ECLSS RACK 139
ECLSS RACK 140
ECLSS RACK 141
ECLSS RACK 142
ECLSS RACK 143
ECLSS RACK 144
ECLSS RACK 145
ECLSS RACK 146
ECLSS RACK 147
ECLSS RACK 148
ECLSS RACK 149
ECLSS RACK 150
ECLSS RACK 151
ECLSS RACK 152
ECLSS RACK 153
ECLSS RACK 154
ECLSS RACK 155
ECLSS RACK 156
ECLSS RACK 157
ECLSS RACK 158
ECLSS RACK 159
ECLSS RACK 160
ECLSS RACK 161
ECLSS RACK 162
ECLSS RACK 163
ECLSS RACK 164
ECLSS RACK 165
ECLSS RACK 166
ECLSS RACK 167
ECLSS RACK 168
ECLSS RACK 169
ECLSS RACK 170
ECLSS RACK 171
ECLSS RACK 172
ECLSS RACK 173
ECLSS RACK 174
ECLSS RACK 175
ECLSS RACK 176
ECLSS RACK 177
ECLSS RACK 178
ECLSS RACK 179
ECLSS RACK 180
ECLSS RACK 181
ECLSS RACK 182
ECLSS RACK 183
ECLSS RACK 184
ECLSS RACK 185
ECLSS RACK 186
ECLSS RACK 187
ECLSS RACK 188
ECLSS RACK 189
ECLSS RACK 190
ECLSS RACK 191
ECLSS RACK 192
ECLSS RACK 193
ECLSS RACK 194
ECLSS RACK 195
ECLSS RACK 196
ECLSS RACK 197
ECLSS RACK 198
ECLSS RACK 199
ECLSS RACK 200
ECLSS RACK 201
ECLSS RACK 202
ECLSS RACK 203
ECLSS RACK 204
ECLSS RACK 205
ECLSS RACK 206
ECLSS RACK 207
ECLSS RACK 208
ECLSS RACK 209
ECLSS RACK 210
ECLSS RACK 211
ECLSS RACK 212
ECLSS RACK 213
ECLSS RACK 214
ECLSS RACK 215
ECLSS RACK 216
ECLSS RACK 217
ECLSS RACK 218
ECLSS RACK 219
ECLSS RACK 220
ECLSS RACK 221
ECLSS RACK 222
ECLSS RACK 223
ECLSS RACK 224
ECLSS RACK 225
ECLSS RACK 226
ECLSS RACK 227
ECLSS RACK 228
ECLSS RACK 229
ECLSS RACK 230
ECLSS RACK 231
ECLSS RACK 232
ECLSS RACK 233
ECLSS RACK 234
ECLSS RACK 235
ECLSS RACK 236
ECLSS RACK 237
ECLSS RACK 238
ECLSS RACK 239
ECLSS RACK 240
ECLSS RACK 241
ECLSS RACK 242
ECLSS RACK 243
ECLSS RACK 244
ECLSS RACK 245
ECLSS RACK 246
ECLSS RACK 247
ECLSS RACK 248
ECLSS RACK 249
ECLSS RACK 250
ECLSS RACK 251
ECLSS RACK 252
ECLSS RACK 253
ECLSS RACK 254
ECLSS RACK 255
ECLSS RACK 256
ECLSS RACK 257
ECLSS RACK 258
ECLSS RACK 259
ECLSS RACK 260
ECLSS RACK 261
ECLSS RACK 262
ECLSS RACK 263
ECLSS RACK 264
ECLSS RACK 265
ECLSS RACK 266
ECLSS RACK 267
ECLSS RACK 268
ECLSS RACK 269
ECLSS RACK 270
ECLSS RACK 271
ECLSS RACK 272
ECLSS RACK 273
ECLSS RACK 274
ECLSS RACK 275
ECLSS RACK 276
ECLSS RACK 277
ECLSS RACK 278
ECLSS RACK 279
ECLSS RACK 280
ECLSS RACK 281
ECLSS RACK 282
ECLSS RACK 283
ECLSS RACK 284
ECLSS RACK 285
ECLSS RACK 286
ECLSS RACK 287
ECLSS RACK 288
ECLSS RACK 289
ECLSS RACK 290
ECLSS RACK 291
ECLSS RACK 292
ECLSS RACK 293
ECLSS RACK 294
ECLSS RACK 295
ECLSS RACK 296
ECLSS RACK 297
ECLSS RACK 298
ECLSS RACK 299
ECLSS RACK 300
ECLSS RACK 301
ECLSS RACK 302
ECLSS RACK 303
ECLSS RACK 304
ECLSS RACK 305
ECLSS RACK 306
ECLSS RACK 307
ECLSS RACK 308
ECLSS RACK 309
ECLSS RACK 310
ECLSS RACK 311
ECLSS RACK 312
ECLSS RACK 313
ECLSS RACK 314
ECLSS RACK 315
ECLSS RACK 316
ECLSS RACK 317
ECLSS RACK 318
ECLSS RACK 319
ECLSS RACK 320
ECLSS RACK 321
ECLSS RACK 322
ECLSS RACK 323
ECLSS RACK 324
ECLSS RACK 325
ECLSS RACK 326
ECLSS RACK 327
ECLSS RACK 328
ECLSS RACK 329
ECLSS RACK 330
ECLSS RACK 331
ECLSS RACK 332
ECLSS RACK 333
ECLSS RACK 334
ECLSS RACK 335
ECLSS RACK 336
ECLSS RACK 337
ECLSS RACK 338
ECLSS RACK 339
ECLSS RACK 340
ECLSS RACK 341
ECLSS RACK 342
ECLSS RACK 343
ECLSS RACK 344
ECLSS RACK 345
ECLSS RACK 346
ECLSS RACK 347
ECLSS RACK 348
ECLSS RACK 349
ECLSS RACK 350
ECLSS RACK 351
ECLSS RACK 352
ECLSS RACK 353
ECLSS RACK 354
ECLSS RACK 355
ECLSS RACK 356
ECLSS RACK 357
ECLSS RACK 358
ECLSS RACK 359
ECLSS RACK 360
ECLSS RACK 361
ECLSS RACK 362
ECLSS RACK 363
ECLSS RACK 364
ECLSS RACK 365
ECLSS RACK 366
ECLSS RACK 367
ECLSS RACK 368
ECLSS RACK 369
ECLSS RACK 370
ECLSS RACK 371
ECLSS RACK 372
ECLSS RACK 373
ECLSS RACK 374
ECLSS RACK 375
ECLSS RACK 376
ECLSS RACK 377
ECLSS RACK 378
ECLSS RACK 379
ECLSS RACK 380
ECLSS RACK 381
ECLSS RACK 382
ECLSS RACK 383
ECLSS RACK 384
ECLSS RACK 385
ECLSS RACK 386
ECLSS RACK 387
ECLSS RACK 388
ECLSS RACK 389
ECLSS RACK 390
ECLSS RACK 391
ECLSS RACK 392
ECLSS RACK 393
ECLSS RACK 394
ECLSS RACK 395
ECLSS RACK 396
ECLSS RACK 397
ECLSS RACK 398
ECLSS RACK 399
ECLSS RACK 400
ECLSS RACK 401
ECLSS RACK 402
ECLSS RACK 403
ECLSS RACK 404
ECLSS RACK 405
ECLSS RACK 406
ECLSS RACK 407
ECLSS RACK 408
ECLSS RACK 409
ECLSS RACK 410
ECLSS RACK 411
ECLSS RACK 412
ECLSS RACK 413
ECLSS RACK 414
ECLSS RACK 415
ECLSS RACK 416
ECLSS RACK 417
ECLSS RACK 418
ECLSS RACK 419
ECLSS RACK 420
ECLSS RACK 421
ECLSS RACK 422
ECLSS RACK 423
ECLSS RACK 424
ECLSS RACK 425
ECLSS RACK 426
ECLSS RACK 427
ECLSS RACK 428
ECLSS RACK 429
ECLSS RACK 430
ECLSS RACK 431
ECLSS RACK 432
ECLSS RACK 433
ECLSS RACK 434
ECLSS RACK 435
ECLSS RACK 436
ECLSS RACK 437
ECLSS RACK 438
ECLSS RACK 439
ECLSS RACK 440
ECLSS RACK 441
ECLSS RACK 442
ECLSS RACK 443
ECLSS RACK 444
ECLSS RACK 445
ECLSS RACK 446
ECLSS RACK 447
ECLSS RACK 448
ECLSS RACK 449
ECLSS RACK 450
ECLSS RACK 451
ECLSS RACK 452
ECLSS RACK 453
ECLSS RACK 454
ECLSS RACK 455
ECLSS RACK 456
ECLSS RACK 457
ECLSS RACK 458
ECLSS RACK 459
ECLSS RACK 460
ECLSS RACK 461
ECLSS RACK 462
ECLSS RACK 463
ECLSS RACK 464
ECLSS RACK 465
ECLSS RACK 466
ECLSS RACK 467
ECLSS RACK 468
ECLSS RACK 469
ECLSS RACK 470
ECLSS RACK 471
ECLSS RACK 472
ECLSS RACK 473
ECLSS RACK 474
ECLSS RACK 475
ECLSS RACK 476
ECLSS RACK 477
ECLSS RACK 478
ECLSS RACK 479
ECLSS RACK 480
ECLSS RACK 481
ECLSS RACK 482
ECLSS RACK 483
ECLSS RACK 484
ECLSS RACK 485
ECLSS RACK 486
ECLSS RACK 487
ECLSS RACK 488
ECLSS RACK 489
ECLSS RACK 490
ECLSS RACK 491
ECLSS RACK 492
ECLSS RACK 493
ECLSS RACK 494
ECLSS RACK 495
ECLSS RACK 496
ECLSS RACK 497
ECLSS RACK 498
ECLSS RACK 499
ECLSS RACK 500
ECLSS RACK 501
ECLSS RACK 502
ECLSS RACK 503
ECLSS RACK 504
ECLSS RACK 505
ECLSS RACK 506
ECLSS RACK 507
ECLSS RACK 508
ECLSS RACK 509
ECLSS RACK 510
ECLSS RACK 511
ECLSS RACK 512
ECLSS RACK 513
ECLSS RACK 514
ECLSS RACK 515
ECLSS RACK 516
ECLSS RACK 517
ECLSS RACK 518
ECLSS RACK 519
ECLSS RACK 520
ECLSS RACK 521
ECLSS RACK 522
ECLSS RACK 523
ECLSS RACK 524
ECLSS RACK 525
ECLSS RACK 526
ECLSS RACK 527
ECLSS RACK 528
ECLSS RACK 529
ECLSS RACK 530
ECLSS RACK 531
ECLSS RACK 532
ECLSS RACK 533
ECLSS RACK 534
ECLSS RACK 535
ECLSS RACK 536
ECLSS RACK 537
ECLSS RACK 538
ECLSS RACK 539
ECLSS RACK 540
ECLSS RACK 541
ECLSS RACK 542
ECLSS RACK 543
ECLSS RACK 544
ECLSS RACK 545
ECLSS RACK 546
ECLSS RACK 547
ECLSS RACK 548
ECLSS RACK 549
ECLSS RACK 550
ECLSS RACK 551
ECLSS RACK 552
ECLSS RACK 553
ECLSS RACK 554
ECLSS RACK 555
ECLSS RACK 556
ECLSS RACK 557
ECLSS RACK 558
ECLSS RACK 559
ECLSS RACK 560
ECLSS RACK 561
ECLSS RACK 562
ECLSS RACK 563
ECLSS RACK 564
ECLSS RACK 565
ECLSS RACK 566
ECLSS RACK 567
ECLSS RACK 568
ECLSS RACK 569
ECLSS RACK 570
ECLSS RACK 571
ECLSS RACK 572
ECLSS RACK 573
ECLSS RACK 574
ECLSS RACK 575
ECLSS RACK 576
ECLSS RACK 577
ECLSS RACK 578
ECLSS RACK 579
ECLSS RACK 580
ECLSS RACK 581
ECLSS RACK 582
ECLSS RACK 583
ECLSS RACK 584
ECLSS RACK 585
ECLSS RACK 586
ECLSS RACK 587
ECLSS RACK 588
ECLSS RACK 589
ECLSS RACK 590
ECLSS RACK 591
ECLSS RACK 592
ECLSS RACK 593
ECLSS RACK 594
ECLSS RACK 595
ECLSS RACK 596
ECLSS RACK 597
ECLSS RACK 598
ECLSS RACK 599
ECLSS RACK 600
ECLSS RACK 601
ECLSS RACK 602
ECLSS RACK 603
ECLSS RACK 604
ECLSS RACK 605
ECLSS RACK 606
ECLSS RACK 607
ECLSS RACK 608
ECLSS RACK 609
ECLSS RACK 610
ECLSS RACK 611
ECLSS RACK 612
ECLSS RACK 613
ECLSS RACK 614
ECLSS RACK 615
ECLSS RACK 616
ECLSS RACK 617
ECLSS RACK 618
ECLSS RACK 619
ECLSS RACK 620
ECLSS RACK 621
ECLSS RACK 622
ECLSS RACK 623
ECLSS RACK 624
ECLSS RACK 625
ECLSS RACK 626
ECLSS RACK 627
ECLSS RACK 628
ECLSS RACK 629
ECLSS RACK 630
ECLSS RACK 631
ECLSS RACK 632
ECLSS RACK 633
ECLSS RACK 634
ECLSS RACK 635
ECLSS RACK 636
ECLSS RACK 637
ECLSS RACK 638
ECLSS RACK 639
ECLSS RACK 640
ECLSS RACK 641
ECLSS RACK 642
ECLSS RACK 643
ECLSS RACK 644
ECLSS RACK 645
ECLSS RACK 646
ECLSS RACK 647
ECLSS RACK 648
ECLSS RACK 649
ECLSS RACK 650
ECLSS RACK 651
ECLSS RACK 652
ECLSS RACK 653
ECLSS RACK 654
ECLSS RACK 655
ECLSS RACK 656
ECLSS RACK 657
ECLSS RACK 658
ECLSS RACK 659
ECLSS RACK 660
ECLSS RACK 661
ECLSS RACK 662
ECLSS RACK 663
ECLSS RACK 664
ECLSS RACK 665
ECLSS RACK 666
ECLSS RACK 667
ECLSS RACK 668
ECLSS RACK 669
ECLSS RACK 670
ECLSS RACK 671
ECLSS RACK 672
ECLSS RACK 673
ECLSS RACK 674
ECLSS RACK 675
ECLSS RACK 676
ECLSS RACK 677
ECLSS RACK 678
ECLSS RACK 679
ECLSS RACK 680
ECLSS RACK 681
ECLSS RACK 682
ECLSS RACK 683
ECLSS RACK 684
ECLSS RACK 685
ECLSS RACK 686
ECLSS RACK 687
ECLSS RACK 688
ECLSS RACK 689
ECLSS RACK 690
ECLSS RACK 691
ECLSS RACK 692
ECLSS RACK 693
ECLSS RACK 694
ECLSS RACK 695
ECLSS RACK 696
ECLSS RACK 697
ECLSS RACK 698
ECLSS RACK 699
ECLSS RACK 700
ECLSS RACK 701
ECLSS RACK 702
ECLSS RACK 703
ECLSS RACK 704
ECLSS RACK 705
ECLSS RACK 706
ECLSS RACK 707
ECLSS RACK 708
ECLSS RACK 709
ECLSS RACK 710
ECLSS RACK 711
ECLSS RACK 712
ECLSS RACK 713
ECLSS RACK 714
ECLSS RACK 715
ECLSS RACK 716
ECLSS RACK 717
ECLSS RACK 718
ECLSS RACK 719
ECLSS RACK 720
ECLSS RACK 721
ECLSS RACK 722
ECLSS RACK 723
ECLSS RACK 724
ECLSS RACK 725
ECLSS RACK 726
ECLSS RACK 727
ECLSS RACK 728
ECLSS RACK 729
ECLSS RACK 730
ECLSS RACK 731
ECLSS RACK 732
ECLSS RACK 733
ECLSS RACK 734
ECLSS RACK 735
ECLSS RACK 736
ECLSS RACK 737
ECLSS RACK 738
ECLSS RACK 739
ECLSS RACK 740
ECLSS RACK 741
ECLSS RACK 742
ECLSS RACK 743
ECLSS RACK 744
ECLSS RACK 745
ECLSS RACK 746
ECLSS RACK 747
ECLSS RACK 748
ECLSS RACK 749
ECLSS RACK 750
ECLSS RACK 751
ECLSS RACK 752
ECLSS RACK 753
ECLSS RACK 754
ECLSS RACK 755
ECLSS RACK 756
ECLSS RACK 757
ECLSS RACK 758
ECLSS RACK 759
ECLSS RACK 760
ECLSS RACK 761
ECLSS RACK 762
ECLSS RACK 763
ECLSS RACK 764
ECLSS RACK 765
ECLSS RACK 766
ECLSS RACK 767
ECLSS RACK 768
ECLSS RACK 769
ECLSS RACK 770
ECLSS RACK 771
ECLSS RACK 772
ECLSS RACK 773
ECLSS RACK 774
ECLSS RACK 775
ECLSS RACK 776
ECLSS RACK 777
ECLSS RACK 778
ECLSS RACK 779
ECLSS RACK 780
ECLSS RACK 781
ECLSS RACK 782
ECLSS RACK 783
ECLSS RACK 784
ECLSS RACK 785
ECLSS RACK 786
ECLSS RACK 787
ECLSS RACK 788
ECLSS RACK 789
ECLSS RACK 790
ECLSS RACK 791
ECLSS RACK 792
ECLSS RACK 793
ECLSS RACK 794
ECLSS RACK 795
ECLSS RACK 796
ECLSS RACK 797
ECLSS RACK 798
ECLSS RACK 799
ECLSS RACK 800
ECLSS RACK 801
ECLSS RACK 802
ECLSS RACK 803
ECLSS RACK 804
ECLSS RACK 805
ECLSS RACK 806
ECLSS RACK 807
ECLSS RACK 808
ECLSS RACK 809
ECLSS RACK 810
ECLSS RACK 811
ECLSS RACK 812
ECLSS RACK 813
ECLSS RACK 814
ECLSS RACK 815
ECLSS RACK 816
ECLSS RACK 817
ECLSS RACK 818
ECLSS RACK 819
ECLSS RACK 820
ECLSS RACK 821
ECLSS RACK 822
ECLSS RACK 823
ECLSS RACK 824
ECLSS RACK 825
ECLSS RACK 826
ECLSS RACK 827
ECLSS RACK 828
ECLSS RACK 829
ECLSS RACK 830
ECLSS RACK 831
ECLSS RACK 832
ECLSS RACK 833
ECLSS RACK 834
ECLSS RACK 835
ECLSS RACK 836
ECLSS RACK 837
ECLSS RACK 838
ECLSS RACK 839
ECLSS RACK 840
ECLSS RACK 841
ECLSS RACK 842
ECLSS RACK 843
ECLSS RACK 844
ECLSS RACK 845
ECLSS RACK 846
ECLSS RACK 847
ECLSS RACK 848
ECLSS RACK 849
ECLSS RACK 850
ECLSS RACK 851
ECLSS RACK 852
ECLSS RACK 853
ECLSS RACK 854
ECLSS RACK 855
ECLSS RACK 856
ECLSS RACK 857
ECLSS RACK 858
ECLSS RACK 859
ECLSS RACK 860
ECLSS RACK 861
ECLSS RACK 862
ECLSS RACK 863
ECLSS RACK 864
ECLSS RACK 865
ECLSS RACK 866
ECLSS RACK 867
ECLSS RACK 868
ECLSS RACK 869
ECLSS RACK 870
ECLSS RACK 871
ECLSS RACK 872
ECLSS RACK 873
ECLSS RACK 874
ECLSS RACK 875
ECLSS RACK 876
ECLSS RACK 877
ECLSS RACK 878
ECLSS RACK 879
ECLSS RACK 880
ECLSS RACK 881
ECLSS RACK 882
ECLSS RACK 883
ECLSS RACK 884
ECLSS RACK 885
ECLSS RACK 886
ECLSS RACK 887
ECLSS RACK 888
ECLSS RACK 889
ECLSS RACK 890
ECLSS RACK 891
ECLSS RACK 892
ECLSS RACK 893
ECLSS RACK 894
ECLSS RACK 895
ECLSS RACK 896
ECLSS RACK 897
ECLSS RACK 898
ECLSS RACK 899
ECLSS RACK 900
ECLSS RACK 901
ECLSS RACK 902
ECLSS RACK 903
ECLSS RACK 904
ECLSS RACK 905
ECLSS RACK 906
ECLSS RACK 907
ECLSS RACK 908
ECLSS RACK 909
ECLSS RACK 910
ECLSS RACK 911
ECLSS RACK 912
ECLSS RACK 913
ECLSS RACK 914
ECLSS RACK 915
ECLSS RACK 916
ECLSS RACK 917
ECLSS RACK 918
ECLSS RACK 919
ECLSS RACK 920
ECLSS RACK 921
ECLSS RACK 922
ECLSS RACK 923
ECLSS RACK 924
ECLSS RACK 925
ECLSS RACK 926
ECLSS RACK 927
ECLSS RACK 928
ECLSS RACK 929
ECLSS RACK 930
ECLSS RACK 931
ECLSS RACK 932
ECLSS RACK 933
ECLSS RACK 934
ECLSS RACK 935
ECLSS RACK 936
ECLSS RACK 937
ECLSS RACK 938
ECLSS RACK 939
ECLSS RACK 940
ECLSS RACK 941
ECLSS RACK 942
ECLSS RACK 943
ECLSS RACK 944
ECLSS RACK 945
ECLSS RACK 946
ECLSS RACK 947
ECLSS RACK 948
ECLSS RACK 949
ECLSS RACK 950
ECLSS RACK 951
ECLSS RACK 952
ECLSS RACK 953
ECLSS RACK 954
ECLSS RACK 955
ECLSS RACK 956
ECLSS RACK 957
ECLSS RACK 958
ECLSS RACK 959
ECLSS RACK 960
ECLSS RACK 961
ECLSS RACK 962
ECLSS RACK 963
ECLSS RACK 964
ECLSS RACK 965
ECLSS RACK 966
ECLSS RACK 967
ECLSS RACK 968
ECLSS RACK 969
ECLSS RACK 970
ECLSS RACK 971
ECLSS RACK 972
ECLSS RACK 973
ECLSS RACK 974
ECLSS RACK 975
ECLSS RACK 976
ECLSS RACK 977
ECLSS RACK 978
ECLSS RACK 979
ECLSS RACK 980
ECLSS RACK 981
ECLSS RACK 982
ECLSS RACK 983
ECLSS RACK 984
ECLSS RACK 985
ECLSS RACK 986
ECLSS RACK 987
ECLSS RACK 988
ECLSS RACK 989
ECLSS RACK 990
ECLSS RACK 991
ECLSS RACK 992
ECLSS RACK 993
ECLSS RACK 994
ECLSS RACK 995
ECLSS RACK 996
ECLSS RACK 997
ECLSS RACK 998
ECLSS RACK 999
ECLSS RACK 1000

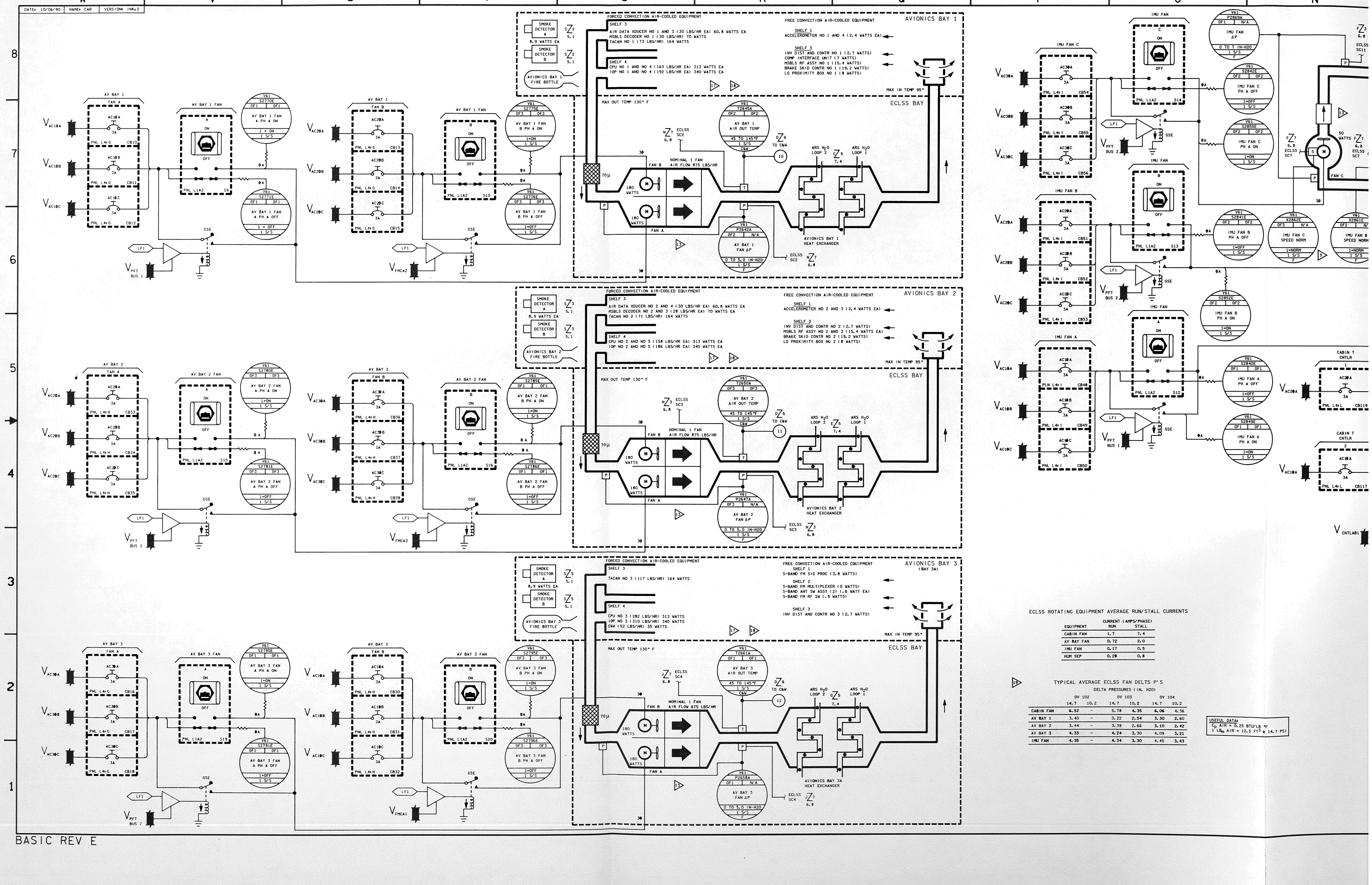
DATE: 10/06/90 | NAME: CAR | VERSION: INK 2
W V U T S R Q P O N
8 7 6 5 4 3 2 1
AVIONICS BAY 1
FORCED CONVECTION AIR-COOLED EQUIPMENT
SHELF 3
AIR DATA XDUCER NO 1 AND 3 (30 LBS/HR EA) 60.8 WATTS EA
MSBLS DECODER NO 1 (30 LBS/HR) 70 WATTS
TACAN NO 1 (73 LBS/HR) 164 WATTS
SHELF 4
CPU NO 1 AND NO 4 (163 LBS/HR EA) 313 WATTS EA
IOP NO 1 AND NO 4 (192 LBS/HR EA) 340 WATTS EA
FREE CONVECTION AIR-COOLED EQUIPMENT
SHELF 1
ACCELEROMETER NO 1 AND 4 (2.4 WATTS EA)
SHELF 3
INV DIST AND CONTR NO 1 (2.7 WATTS)
COMP INTERFACE UNIT (7 WATTS)
MSBLS RF ASSY NO 1 (15.4 WATTS)
BRAKE SKID CONTR NO 1 (19.2 WATTS)
LG PROXIMITY BOX NO 1 (8 WATTS)
SMOKE DETECTOR A
8.9 WATTS EA
SMOKE DETECTOR B
AVIONICS BAY 1 FIRE BOTTLE
MAX IN TEMP 95°
MAX OUT TEMP 130° F
ECLSS BAY
NOMINAL 1 FAN AIR FLOW 875 LBS/HR
FAN B
FAN A
180 WATTS
180 WATTS
70µ
AV BAY 1 AIR OUT TEMP
45 TO 145°F
AV BAY 1 FAN ΔP
0 TO 5.0 IN-H2O
ARS H2O LOOP 2
ARS H2O LOOP 1
AVIONICS BAY 1 HEAT EXCHANGER
TO C&W
AV BAY 1 FAN A PH A ON
AV BAY 1 FAN A PH A OFF
AV BAY 1 FAN B PH A ON
AV BAY 1 FAN B PH A OFF
AV BAY 1 FAN A
AV BAY 1 FAN B
AV BAY 1 FAN A PH A
AV BAY 1 FAN B PH A
AV BAY 1 FAN A PH B
AV BAY 1 FAN B PH B
AV BAY 1 FAN A PH B
AV BAY 1 FAN B PH B
1=ON
1=OFF
1 S/S
F
OSE
LF1
VPFT BUS 1
VFMCA2
VAC10A
VAC10B
VAC10C
VAC20A
VAC20B
VAC20C
AC10A
AC10B
AC10C
AC20A
AC20B
AC20C
3A
PNL L4+G
PNL L4+H
CB10
CB11
CB12
CB13
CB14
CB15
S9
S10
AVIONICS BAY 2
FORCED CONVECTION AIR-COOLED EQUIPMENT
SHELF 3
AIR DATA XDUCER NO 2 AND 4 (30 LBS/HR EA) 60.8 WATTS EA
MSBLS DECODER NO 2 AND 3 (28 LBS/HR EA) 70 WATTS EA
TACAN NO 2 (71 LBS/HR) 164 WATTS
SHELF 4
CPU NO 2 AND NO 5 (158 LBS/HR EA) 313 WATTS EA
IOP NO 2 AND NO 5 (186 LBS/HR EA) 340 WATTS EA
FREE CONVECTION AIR-COOLED EQUIPMENT
SHELF 1
ACCELEROMETER NO 2 AND 3 (2.4 WATTS EA)
SHELF 3
INV DIST AND CONTR NO 2 (2.7 WATTS)
MSBLS RF ASSY NO 2 AND 3 (15.4 WATTS EA)
BRAKE SKID CONTR NO 2 (19.2 WATTS)
LG PROXIMITY BOX NO 2 (8 WATTS)
SMOKE DETECTOR A
8.9 WATTS EA
SMOKE DETECTOR B
AVIONICS BAY 2 FIRE BOTTLE
MAX IN TEMP 95°
MAX OUT TEMP 130° F
ECLSS BAY
NOMINAL 1 FAN AIR FLOW 875 LBS/HR
FAN B
FAN A
180 WATTS
180 WATTS
70µ
AV BAY 2 AIR OUT TEMP
45 TO 145°F
AV BAY 2 FAN ΔP
0 TO 5.0 IN-H2O
ARS H2O LOOP 2
ARS H2O LOOP 1
AVIONICS BAY 2 HEAT EXCHANGER
TO C&W
AV BAY 2 FAN A PH A ON
AV BAY 2 FAN A PH A OFF
AV BAY 2 FAN B PH A ON
AV BAY 2 FAN B PH A OFF
AV BAY 2 FAN A
AV BAY 2 FAN B
AV BAY 2 FAN A PH A
AV BAY 2 FAN B PH A
AV BAY 2 FAN A PH B
AV BAY 2 FAN B PH B
AV BAY 2 FAN A PH B
AV BAY 2 FAN B PH B
1=ON
1=OFF
1 S/S
F
GSE
LF1
VPFT BUS 2
VFMCA3
VAC20A
VAC20B
VAC20C
VAC30A
VAC30B
VAC30C
AC20A
AC20B
AC20C
AC30A
AC30B
AC30C
3A
PNL L4+H
PNL L4+G
CB32
CB33
CB34
CB35
CB36
CB37
CB38
S15
S16
AVIONICS BAY 3 (BAY 3A)
FORCED CONVECTION AIR-COOLED EQUIPMENT
SHELF 3
TACAN NO 3 (117 LBS/HR) 164 WATTS
SHELF 4
CPU NO 3 (282 LBS/HR) 313 WATTS
IOP NO 3 (310 LBS/HR) 340 WATTS
C&W (52 LBS/HR) 35 WATTS
FREE CONVECTION AIR-COOLED EQUIPMENT
SHELF 1
S-BAND FM SIG PROC (3.8 WATTS)
SHELF 2
S-BAND FM MULTIPLEXER (0 WATTS)
S-BAND ANT SW ASSY (2) (.6 WATT EA)
S-BAND FM RF SW (.9 WATTS)
SHELF 3
INV DIST AND CONTR NO 3 (2.7 WATTS)
SMOKE DETECTOR A
8.9 WATTS EA
SMOKE DETECTOR B
AVIONICS BAY 3 FIRE BOTTLE
MAX IN TEMP 95°
MAX OUT TEMP 130° F
ECLSS BAY
NOMINAL 1 FAN AIR FLOW 675 LBS/HR
FAN B
FAN A
180 WATTS
180 WATTS
70µ
AV BAY 3 AIR OUT TEMP
45 TO 145°F
AV BAY 3 FAN ΔP
0 TO 5.0 IN-H2O
ARS H2O LOOP 2
ARS H2O LOOP 1
AVIONICS BAY 3A HEAT EXCHANGER
TO C&W
AV BAY 3 FAN A PH A ON
AV BAY 3 FAN A PH A OFF
AV BAY 3 FAN B PH A ON
AV BAY 3 FAN B PH A OFF
AV BAY 3 FAN A
AV BAY 3 FAN B
AV BAY 3 FAN A PH A
AV BAY 3 FAN B PH A
AV BAY 3 FAN A PH B
AV BAY 3 FAN B PH B
AV BAY 3 FAN A PH B
AV BAY 3 FAN B PH B
1=ON
1=OFF
1 S/S
F
GSE
LF1
VPFT BUS 2
VFMCA1
VAC30A
VAC30B
VAC30C
VAC10A
VAC10B
VAC10C
AC30A
AC30B
AC30C
AC10A
AC10B
AC10C
3A
PNL L4+G
PNL L4+H
CB18
CB31
CB32
S19
S20
IMU FAN C
IMU FAN B
IMU FAN A
IMU FAN
PNL L1A2
S14
S13
S12
IMU FAN C PH A OFF
IMU FAN C PH A ON
IMU FAN C SPEED NORM
IMU FAN B PH A OFF
IMU FAN B PH A ON
IMU FAN B SPEED NORM
IMU FAN A PH A OFF
IMU FAN A PH A ON
IMU FAN A P
IMU FAN B P
IMU FAN C P
0 TO 7 IN-H2O
1=NORM
50 WATTS
FAN C
CABIN T CNTLR
VCNTLAB1
ECLSS ROTATING EQUIPMENT AVERAGE RUN/STALL CURRENTS
CURRENT (AMPS/PHASE)
EQUIPMENT | RUN | STALL
CABIN FAN | 1.7 | 7.4
AV BAY FAN | 0.72 | 2.0
IMU FAN | 0.17 | 0.5
HUM SEP | 0.28 | 0.8
TYPICAL AVERAGE ECLSS FAN DELTS P'S
DELTA PRESSURES (IN. H20)
OV 102 | OV 103 | OV 104
14.7 10.2 | 14.7 10.2 | 14.7 10.2
CABIN FAN 6.52 - | 5.78 4.35 | 6.06 4.36
AV BAY 1 3.40 - | 3.22 2.54 | 3.30 2.60
AV BAY 2 3.44 - | 3.39 2.66 | 3.10 2.42
AV BAY 3 4.33 - | 4.24 3.30 | 4.09 3.21
IMU FAN 4.35 - | 4.34 3.30 | 4.45 3.43
USEFUL DATA: Cp AIR = 0.25 BTU/LB °F
1 LBm AIR = 12.5 FT3 @ 14.7 PSI
BASIC REV E

DATE: 09/03/93	NAME: JMB	VERSION: BPT: 24
DATE: 09/22/93	NAME: VSH	VERSION: INK: 5
DATE: 10/07/93	NAME: MDU	VERSION: INK: 6

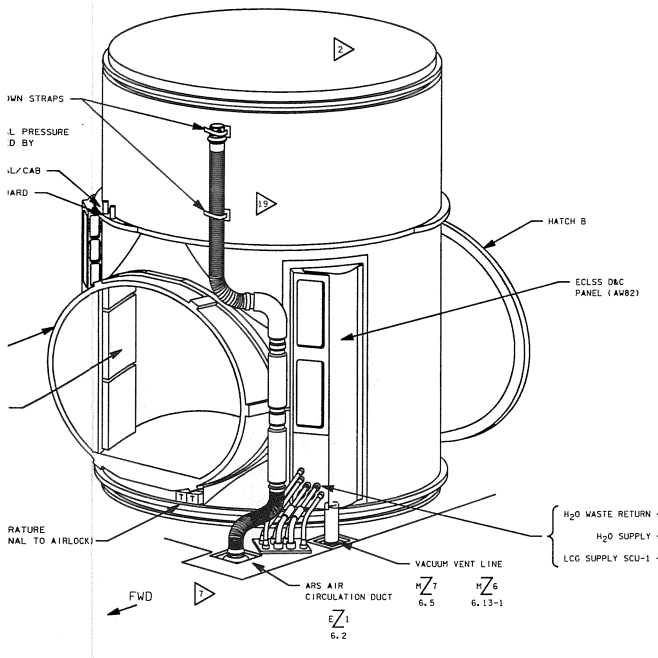

ARS DUCT STOWED POSITION
(NON-MODULE FLIGHTS)

AIRLOCK

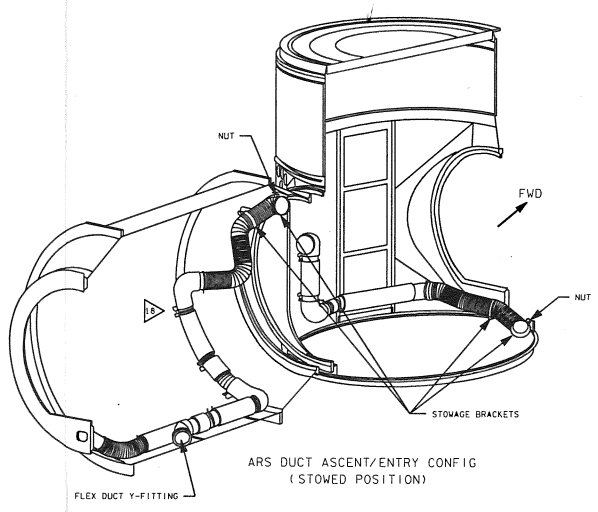

ARS DUCT ASCENT/ENTRY CONFIG
(STOWED POSITION)

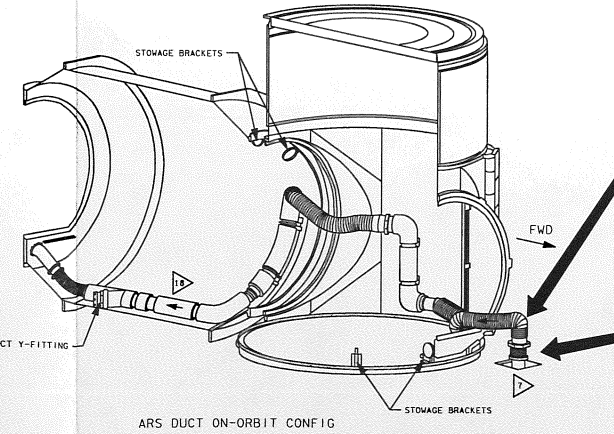

ARS DUCT ON-ORBIT CONFIG

AIRLOCK AND TUNNEL ADAPTER
(SPACELAB OR SPACEHAB CONFIG)

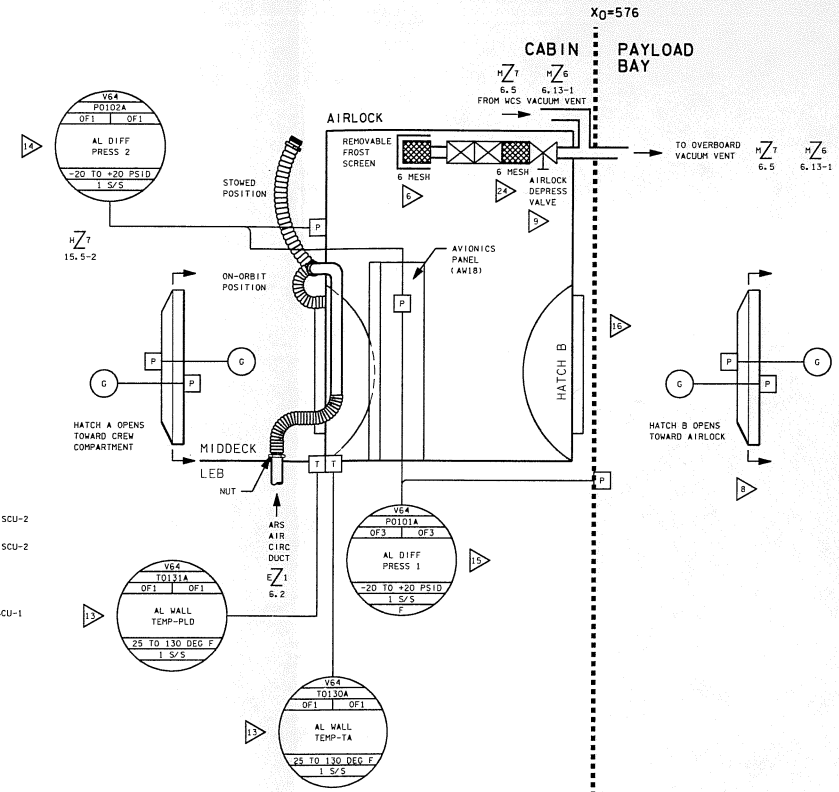

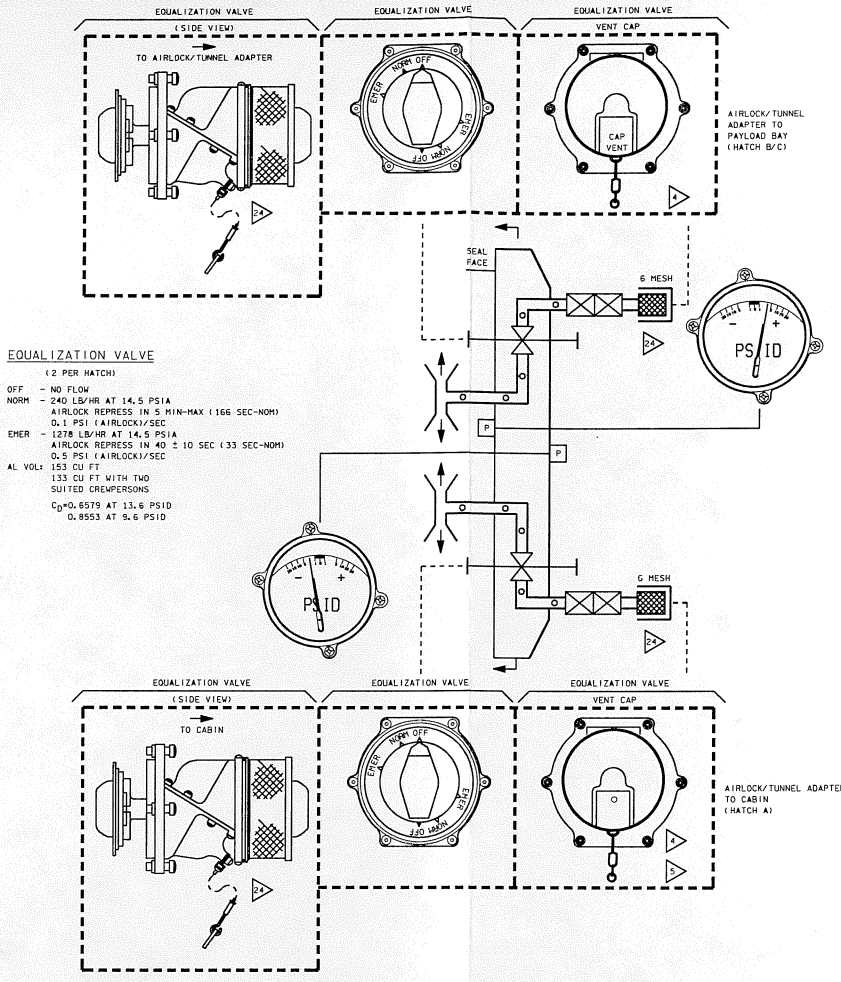

EQUALIZATION VALVE

(2 PER HATCH)

OFF - NO FLOW
NORM - 240 LB/HR AT 14.5 PSIA
AIRLOCK REPRESS IN 5 MIN-MAX (166 SEC-NOM)
0.1 PSI (AIRLOCK)/SEC
EMER - 1278 LB/HR AT 14.5 PSIA
AIRLOCK REPRESS IN 40 ± 10 SEC (33 SEC-NOM)
0.5 PSI (AIRLOCK)/SEC
AL VOL: 153 CU FT
153 CU FT WITH TWO SUITED CREWPERSONS
C_D=0.6579 AT 13.6 PSID
0.8553 AT 9.6 PSID



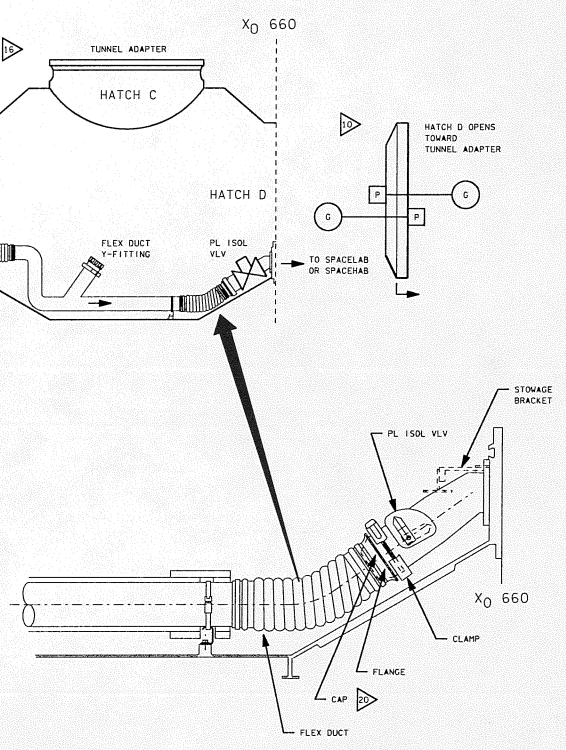

△24 VALVE INLET FILTER SCREENS ARE ON ALL EQUALIZATION VALVES AND THE DEPRESS VALVE AND ARE NOT REMOVABLE

△23 A FULL EMU H_2O RECHARGE IS EQUIVALENT TO 6% OF ORBITER H_2O TANK QUANTITY

△22 BACTERIA CARTRIDGE/POTABLE WATER FILTER (ITEM 416) CONSISTS OF IODINE-IMPREGNATED EPOXY BEADS ENCLOSED BY A 2μ SCREEN

△21 THE PORTABLE OXYGEN SUPPLY (POS) QD'S WERE ORIGINALLY INTENDED FOR USE BY THE EVA CREWMEMBERS DURING PREBREATHE ACTIVITIES. HOWEVER, MORE EFFICIENT PREBREATHE SYSTEMS HAVE BEEN IMPLEMENTED AND THESE QD'S HAVE NEVER BEEN USED

△20 THE CAP IS INSTALLED FOR ASCENT/ENTRY AS A BACKUP TO THE PAYLOAD ISOL VALVE FOR PRESSURE INTEGRITY. IT IS REMOVED ON-ORBIT DURING SPACELAB ACTIVATION

△19 THE FLEXIBLE PORTIONS OF THE ARS AIR CIRCULATION DUCT ARE REMOVED FOR MODULE FLIGHTS. FOR NON-MODULE FLIGHTS, ONLY THE UPPER FLEX HOSE IS EXPOSED. ALL OTHER PARTS ARE COVERED BY CLOSEOUT PANELS

△18 ARS AIR CIRCULATION DUCT
FOR SPACELAB MODULE: ±2.86 IN. DIA AND FLOWS 48 CFM (3 IN. O.D.)
FOR SPACEHAB MODULE: ±3.86 IN. DIA AND FLOWS 125 CFM (4 IN. O.D.)
(48 CFM CONDITIONED, 77 CFM UNCONDITIONED)

△17 IN POST INSERTION, DIFFUSER CAP IS REMOVED FROM FLOOR FITTING AND INSTALLED ON THE FLEX DUCT Y-FITTING IN THE TUNNEL ADAPTER

△16 FOR TUNNEL ADAPTER CONFIGURATION, HATCH B IS PHYSICALLY REMOVED AND REINSTALLED IN THE C LOCATION

△15 AL DIFF PRESS 1 MEASURES DIFFERENTIAL PRESSURE BETWEEN AIRLOCK AND PAYLOAD BAY

△14 AL DIFF PRESS 2 MEASURES DIFFERENTIAL PRESSURE BETWEEN CABIN AND AIRLOCK

△13 SERVES AS BACKUP TO MIDDECK TEMPERATURE SENSORS. THEY ARE LOCATED ON THE INNER SIDE OF THE AIRLOCK WALL, BELOW HATCH A, AND ARE NOT ACCESSIBLE OR VISIBLE BY THE CREW

△12 FITTINGS TORQUED TO 10-14 FT-LBS

△11 FITTINGS TORQUED TO 15-25 FT-LBS

△10 HATCH IS PHYSICALLY LOCATED INSIDE TUNNEL ADAPTER

△9 A/L DEPRESS VALVE PHYSICALLY LOCATED ON PANEL AW82B

△8 HATCH IS PHYSICALLY LOCATED INSIDE AIRLOCK

△7 TWO AIRLOCK "AIR CIRCULATION DUCT" CONFIGURATIONS EXIST, HOWEVER, ONLY ONE IS FLOWN AT ANY GIVEN TIME

△6 THE DEBRIS SCREEN ASSEMBLY IS FRICTION FIT. IT IS EASILY REMOVED VIA A STRAIGHT PULL ON A HANDLE AND IS TETHERED TO THE VALVE BODY WITH A WIRE CABLE. REMOVAL CAPABILITY IS PROVIDED IN CASE OF FROST BUILDUP ON THE SCREEN DURING DEPRESS. IN THIS CASE, THE SCREEN CAN BE REMOVED AND THE DEPRESS CONTINUED

△5 THE MANUALLY OPERATED PRESSURE BLEED VALVE HAS BEEN REMOVED FROM THE VENT CAPS (2) ON THE AIRLOCK/TUNNEL ADAPTER TO CABIN HATCH EQUALIZATION VALVES (HATCH A). A 0.18 INCH DIAMETER ORIFICE IS EXPOSED TO PREVENT AIRLOCK OVERPRESSURIZATION WITH AN O_2 LEAK INTO THE AIRLOCK OF UP TO 21.3 LB/HR AT 14.5 PSIA

△4 THE VENT CAPS OF ALL HATCH EQUALIZATION VALVES AND THE AIRLOCK DEPRESS VALVE ARE THREADED AND MUST BE ROTATED TO BE REMOVED. A MANUALLY OPERATED PRESSURE BLEED VALVE IS LOCATED ON THE VENT CAP TO ALLOW PRESSURE EQUALIZATION ACROSS THE CAP (SEE NOTE 5). AN IDENTICAL VALVE SELECT KNOB WITH DETENTS IS LOCATED ON EACH SIDE OF THE EQUALIZATION VALVES. E.G. THEY CAN BE OPERATED FROM EITHER SIDE. DISCHARGE COEFFICIENT (C_D)=0.59

△3 THE ECLSS/SCU INTERFACES SHOWN ARE FIXED DYNA-TUBE CONNECTORS (EXCEPT ELECTRICAL). FOR DETAILS OF THE SCU/EMU INTERFACES, REFER TO FIG 2.2-25, VOLUME 15 OF THE SFOH

△2 THE ORIENTATION OF THE AIRLOCK AND ITS CONTROLS AND DISPLAYS IS INVERTED 180 DEGREES FROM THE ORBITER CREW COMPARTMENT I-G ORIENTATION

NOTES: 1. THE INTENT OF THIS DRAWING IS TO SHOW ONLY:
A. THE ECLSS/AIRLOCK INTERFACES
B. AIRLOCK INSTRUMENTATION
C. BASIC AIRLOCK PLACEMENT/ORIENTATION

3 AEI

SIGNATURE	DATE	NATIONAL AERONAUTICS AND SPACE ADMINISTRATION LYNDON B. JOHNSON SPACE CENTER HOUSTON, TEXAS	
DSGN P. SHERRILL	5/10/78		
DR		AIRLOCK/ECLSS INTERFACES	
ENGR T.DOELING/S.DOERING			
ENGR	9/30/93		
APP	10/5/93		
APP		SPACE SHUTTLE	DWG NO 6.3
CADS	10-8-93	ALL	
LTR E	PCN 3	121 X 34	PAGE SHEET 1 OF 2

BASIC REV E-3

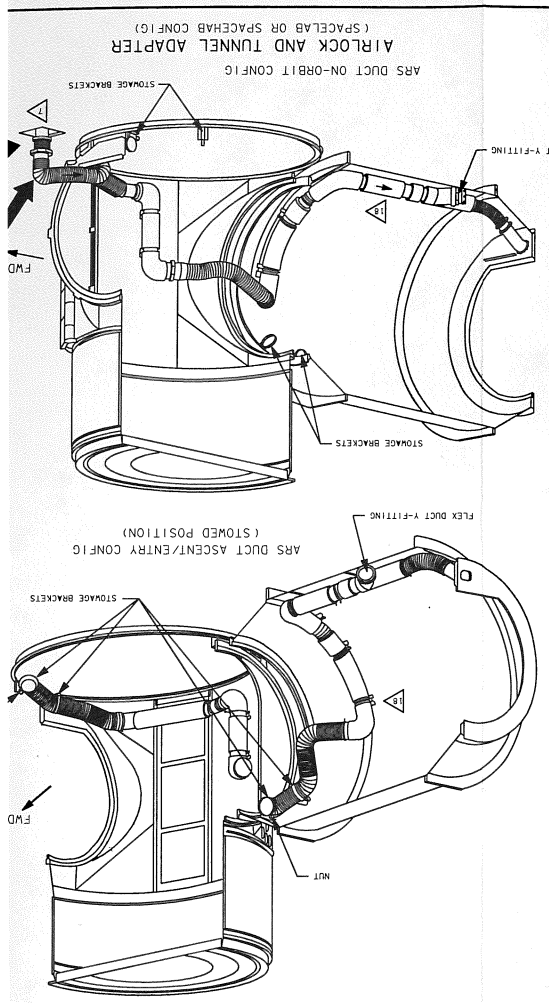
AIRLOCK AND TUNNEL ADAPTER
(SPACELAB OR SPACEHAB CONFIG)
ARS DUCT ON-ORBIT CONFIG
STOWAGE BRACKETS
FLEX DUCT Y-FITTING
FWD
STOWAGE BRACKETS
ARS DUCT ASCENT/ENTRY CONFIG
(STOWED POSITION)
FLEX DUCT Y-FITTING
STOWAGE BRACKETS
FWD
NUT
AIRLOCK
ARS DUCT STOWED POSITION
(NON-MODULE FLIGHTS)
FWD
VACUUM VENT LINE
ARS AIR
CIRCULATION DUCT
AIRLOCK WALL TEMPERATURE
SENSORS (2) (INTERNAL TO AIRLOCK)
AVIONICS D&C
PANEL (AW18)
HATCH A
HATCH
HOLD DOWN STRAPS
AIRLOCK DIFFERENTIAL PRESSURE
SENSORS (2) (COVERED BY
CLOSEOUT PANELS) *
* AL/CAB
* AL/OVERHEAD
ECLSS D&C PANEL
AW82H
AW82D
AW82A
AW82B
SUPPLY H2O
WASTE H2O
REGULATING
SUPPLY O2
WASTE O2
TP R
TP O
WATER SUPPLY
PRESSURE REG (419)
8-15 PSID
CONDENSATE
WATER REG (419)
15.5 ± 0.5 PSID
(MANUAL OVERRIDE
0-5 PSID)
SUPPLY
WASTE
WATER
CAP VENT
CAP VENT
CAB VENT
LOW WATER
LOW WATER
LOW WATER
LOW WATER
CAB VENT
CAB VENT
CAB VENT

DATE: 10/07/93	NAME: MDU	VERSION: INK.6

AW82 FEEDTROUGH PLATE

3/8 IN O.D. LEB/MIDDECK — ECLSS D&C PANEL

3/8 IN O.D.

LOOP FLOW OF 250 (+20/-50) LB/HR/LOOP
PROVIDED BY EMU-PLSS H2O LOOP PUMP

ARS H2O LOOPS

LOOP 1

FLOW: 560-1350 LB/HR/LOOP
TEMP: 40-45 DEG F

LOOP 2

LCVG HX
MAX LOAD
4000 BTU/HR

PZ 1 T.4

PZ 2 T.4

3/8 IN O.D.

3/8 IN O.D.

CD	POSITION	ORIFICE DIA. IN	ORIFICE EFF AREA, IN²	AVG VALVE FLOW RATES 14.7 → 5.0 PSIA/SEC	AVG VALVE FLOW RATES 10.2 → 5.0 PSIA/SEC	AVG VALVE FLOW RATES 5.0 → 0.2 PSIA/SEC	TIME TO DEPRESS A/L, MIN 14.7 → 5.0	TIME TO DEPRESS A/L, MIN 10.2 → 5.0	TIME TO DEPRESS A/L, MIN 5.0 → 0.2
	CLOSED	0	0	0	0	0	——	——	——
0.59	5	0.5925	0.1627	.067	.055	.009	2.42	1.58	9.25
0.59	0	1.0164	0.4787	.195	.173	.026	0.83	.50	3.25

ASSUMPTIONS: A/L VOLUME 130 FT³ (150 FT³ - 10 FT³/EMU)
A/L TEMP 75°F
ISENTROPIC DEPRESS

MZ 6 6.13-1 — MZ 7 6.5 — TO C VACL

O2 SUPPLY

CRYO

PRESS: 900 ± 50 PSIG
(803 - 882 PSIG NOM)
MAX FLOW: 50 LB/HR/2 SYSTEMS
QTY: APPROX 1.2 LB/EMU/RECHARGE (FULL)

KZ 4 6.1-2

1/4 IN O.D.

V64 P0202A OF3 OF3 — EVLSS O2 SUPPLY PRESS — 0-1500 PSIA — 1 S/S

SUPPLY PRESS O2 H2O

PNL AW82D

V64 P0201A OF1 OF1 — EVLSS H2O SUPPLY PRESS — 0-40 PSIG — 1 S/S

EV-1 OXYGEN — OPEN — CLOSE — PNL AW82B — MAX FLOW 50 LB/HR

EV-2 OXYGEN — OPEN — CLOSE — PNL AW82B — MAX FLOW 50 LB/HR

V64 X0515E OF1 N/A — EMU 1 WATER SUPPLY-OPEN — 1=OPEN — 1 S/S

V64 X0505E OF1 N/A — EMU 1 WATE WASTE-OPEN — 1=OPEN — 1 S/S

EMU WATER SUPPLY

PRESS: 15.5 - 16.5 PSIG
LOCKUP: 17.0 PSIG
RELIEF: 17.0 - 20.0 PSIG
FLOW: 100-130 LB/HR
FULL EMU RECHARGE:
10 LB H20 AT 70 DEG F
TIME: 6 MIN AT 10 PSIG

1/4 IN O.D.

NZ 3 6.4

NZ 1 6.13-1 — SZ 5 6.5

EMU WASTE WATER

0-10 LB/EMU RECHARGE

MN C — EMU 1 H2O SUPPLY — 3A — PNL ML86B+E CB58 — VMNC ML86B

EMU 1 WATER SUPPLY — OP CL — (DS1) — OPEN — CLOSE — PNL AW82D S1 — CL OP

MN C — EMU 1 H2O WASTE — 3A — PNL ML86B+E CB61 — VMNC ML86B

EMU 1 WATER WASTE — OP CL — (DS2) — OPEN — CLOSE — PNL AW82D S2 — CL OP

MN A — EMU 2 H2O SUPPLY — 3A — PNL ML86B+E CB57 — VMNA ML86B

EMU 2 WATER SUPPLY — OP CL — (DS3) — OPEN — CLOSE — PNL AW82D S3 — CL OP

MN A — EMU 2 H2O WASTE — 3A — PNL ML86B+E CB60 — VMNA ML86B

EMU 2 WATER WASTE — OP CL — (DS4) — OPEN — CLOSE — PNL AW82D S4 — CL OP

V64 X0535E OF2 N/A — EMU 2 WATER SUPPLY-OPEN — 1=OPEN — 1 S/S

V64 X0525E OF2 N/ — EMU 2 WATE WASTE-OPEN — 1=OPEN — 1 S/S

BASIC REV E-3

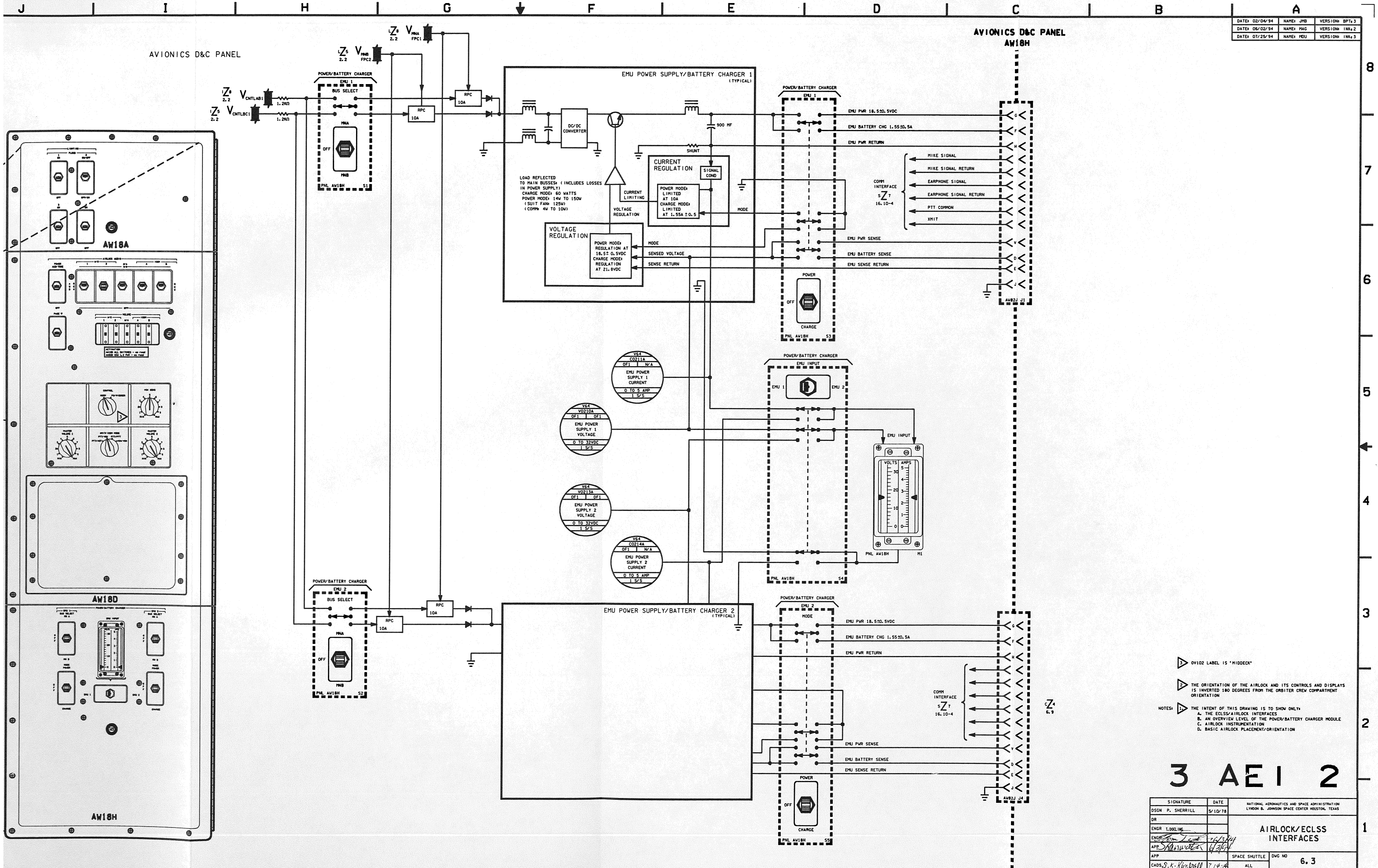

DATE: 02/04/94	NAME: JMB	VERSION: BPT: 3
DATE: 06/02/94	NAME: MAG	VERSION: INK: 2
DATE: 07/25/94	NAME: MDU	VERSION: INK: 3

3 OV102 LABEL IS "MIDDECK"

2 THE ORIENTATION OF THE AIRLOCK AND ITS CONTROLS AND DISPLAYS IS INVERTED 180 DEGREES FROM THE ORBITER CREW COMPARTMENT ORIENTATION

NOTES: 1. THE INTENT OF THIS DRAWING IS TO SHOW ONLY:
A. THE ECLSS/AIRLOCK INTERFACES
B. AN OVERVIEW LEVEL OF THE POWER/BATTERY CHARGER MODULE
C. AIRLOCK INSTRUMENTATION
D. BASIC AIRLOCK PLACEMENT/ORIENTATION

3 AEI 2

SIGNATURE	DATE	NATIONAL AERONAUTICS AND SPACE ADMINISTRATION LYNDON B. JOHNSON SPACE CENTER HOUSTON, TEXAS
DSGN P. SHERRILL	5/10/78	
DR		AIRLOCK/ECLSS INTERFACES
ENGR T. DOELING		
ENGR	7/6/3/94	
APP	6/3/94	
APP		SPACE SHUTTLE ALL
CADS S.K. Kimbrell	7/14/94	DWG NO 6.3
LTR E	PCN 4	66 X 34
		PAGE / SHEET 2 OF 2

BASIC REV E-4

AVIONICS D&C PANEL

MID DECK FLOOR

"AIRLOCK CEILING"

FWD HATCH

"AIRLOCK FLOOR"

MID DECK CEILING

AW18A

AW18D

AW18H

POWER/BATTERY CHARGER

EMU 1

BUS SELECT

MNA

OFF

MNB

PNL AW18H S1

EMU 2

PNL AW18H S2

RPC 10A

V_{MNA} FPC1

V_{MNB} FPC2

V_{CNTLA1}

V_{CNTLB1}

1.2KΩ

DATE: 03/13/91	NAME: JDF	VERSION: BPT-23
DATE: 04/01/91	NAME: SKK	VERSION: INK-4
DATE: 08/01/94	NAME: LAM	VERSION: INK-5

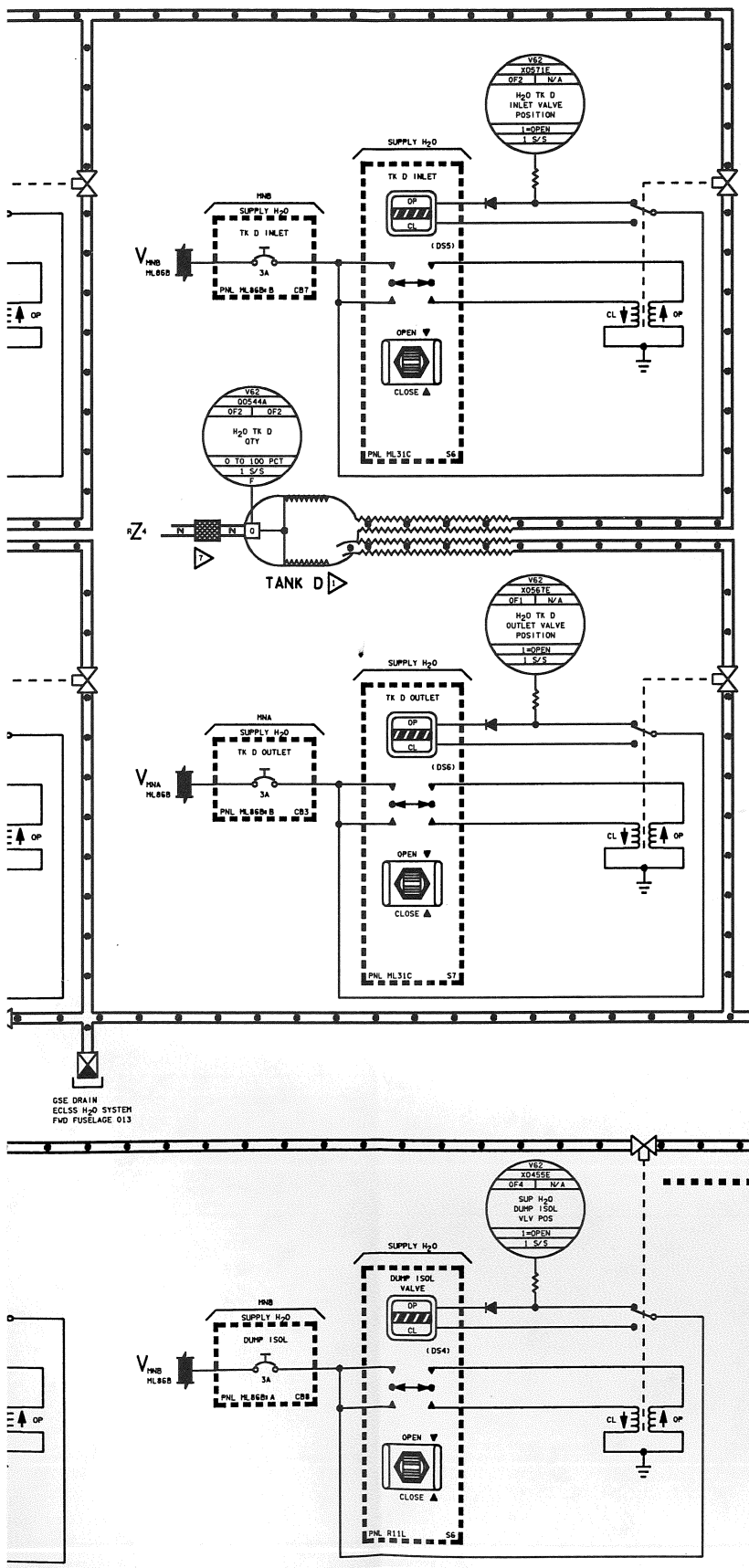

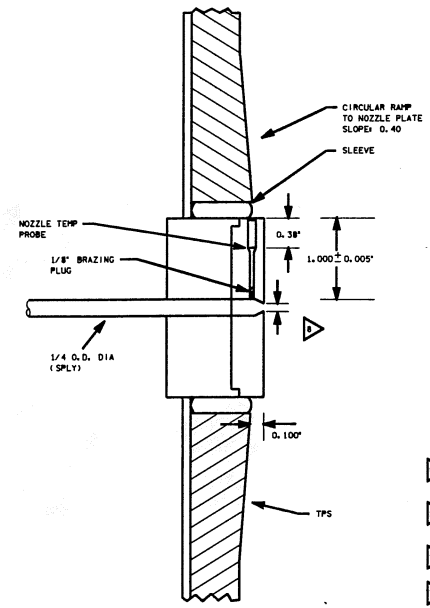

ACTUAL NOZZLE DIAMETER (ALL VEH)

	OV-102	OV-103	OV-104
SUPPLY DUMP NOZZLE	0.0565	0.052	0.0550

12. TP7 NOT ACCESSIBLE TO THE CREW

13. GAGE ON PANEL AV82D SAYS, "PRESS H2O" "SEE DWG 6.3-1"

14. DYNATUBE FITTING

15. CONTINGENCY VACUUM HOSES
- LENGTH
  - BLUE/BLUE - 10 FT
  - RED/RED - 10 FT
  - YELLOW/YELLOW - 8 FT
  - MATERIAL - TEFLON
  - DIAMETER -1/4 IN OD
- FREE FLUID NOZZLE LENGTH = ~13 5/8 IN
- STOWED IN CONTINGENCY HOSE AND CABLE KIT

OD COMPATIBILITY

-1101	-3102
-1141	-3142
-1201	-3142, -3302
-1301	-3142, -3302

16. RESERVED

11. ALL SUPPLY H_2O TUBING IS 1/4" O.D. WITH .016" WALL THICKNESS UNLESS OTHERWISE INDICATED

10. REFER TO TABLE 6-I FOR DRAWING REFERENCES

△ H_2 SEPARATORS LOCATED IN ECLSS BAY AND SLIGHTLY FWD OF STA BULKHEAD

△ SPEC DIAMETER OF NOZZLE 0.056 ±0.005 INCHES

△ 4μ HYDROPHOBIC FILTER PRECLUDES WATER FROM EXITING TANK TO H_2 SUPPLY LINES IN THE EVENT OF BELLOWS LEAK

△ ALLOWS WASTE TANK WATER TO BE SUPPLIED IN A CONTINGENCY TO FES WHEN CONTINGENCY H_2O X-TIE WASTE QD CONNECTED TO SUPPLY H_2O QD. ALSO ALLOWS DUMP NOZZLES TO BE CROSS-TIED. SEE 13

△ RELIEF VALVE CRACK 0.8 PSID TO 2.5 PSID MAX RESEAT 0.8 PSID MIN

△ THE A AND B (REDUNDANT) LINE HEATERS ARE CONTINUOUSLY WRAPPED TOGETHER THE FULL LENGTH OF THE LINE FROM X_0=576

△ DUMP NOZZLE
EXIT DIAMETER: .056 IN
MAX FLOW RATE: 185-195 LB/HR FLUID
1.5-2.0 LB/HR AIR
AVG FLOW RATE: 130-160 LB/HR FLUID

△ MICROBIAL FILTER: RESIN IMPREGNATED WITH TRIIODIDE(I3) FOR CONTACT BACTERIA KILL. NOT CHANGED OUT IN FLIGHT

NOTES:

△ WATER STORAGE TANKS
USABLE CAPACITY: 165 LBS
LENGTH: 35.5 IN
DIAMETER: 15.5 IN
WEIGHT: 39.5 LB
BELLOWS MATERIAL: INCONEL 718

* 4 SPLY H_2O

SIGNATURE	DATE	NATIONAL AERONAUTICS AND SPACE ADMINISTRATION LYNDON B. JOHNSON SPACE CENTER HOUSTON, TEXAS	
DSGN L. BUCHANAN	10/4/78		
DR L. BUCHANAN	10/1/79	SUPPLY WATER STORAGE	
ENGR J.H. SOLOMON			
ENGR	2/7/79		
APP	2/7/79		
APP		SPACE SHUTTLE	DWG NO 6.4
CADS S.K. Kimbrell 2-10-94		ALL	
LTR E PCN 4		126.5 X 34 PAGE	SHEET 1 OF 1

BASIC REV E-4

MIDDECK

ECLSS BAY

TANK A

TANK B

TANK C

TANK D

POTABLE TANK A

SUPPLY H2O

WASTE H2O

CABIN

ITEM 1.27

ITEM 1.111

ITEM 1.110

ITEM 1.85

ITEM 1.2.27

ITEM 1.2.28

ITEM 1.2.29

ITEM 1.2.30

ITEM 1.2.31

ITEM 1.2.32

ITEM 1.2.33

ITEM 1.2.34

ITEM 1.2.35

ITEM 1.2.36

ITEM 1.2.37

ITEM 1.2.38

ITEM 1.2.39

ITEM 1.2.40

ITEM 1.2.41

ITEM 1.2.42

ITEM 1.2.43

ITEM 1.2.44

ITEM 1.2.45

ITEM 1.2.46

ITEM 1.2.47

ITEM 1.2.48

ITEM 1.2.49

ITEM 1.2.50

ITEM 1.2.51

ITEM 1.2.52

ITEM 1.2.53

ITEM 1.2.54

ITEM 1.2.55

ITEM 1.2.56

ITEM 1.2.57

ITEM 1.2.58

ITEM 1.2.59

ITEM 1.2.60

ITEM 1.2.61

ITEM 1.2.62

ITEM 1.2.63

ITEM 1.2.64

ITEM 1.2.65

ITEM 1.2.66

ITEM 1.2.67

ITEM 1.2.68

ITEM 1.2.69

ITEM 1.2.70

ITEM 1.2.71

ITEM 1.2.72

ITEM 1.2.73

ITEM 1.2.74

ITEM 1.2.75

ITEM 1.2.76

ITEM 1.2.77

ITEM 1.2.78

ITEM 1.2.79

ITEM 1.2.80

ITEM 1.2.81

ITEM 1.2.82

ITEM 1.2.83

ITEM 1.2.84

ITEM 1.2.85

ITEM 1.2.86

ITEM 1.2.87

ITEM 1.2.88

ITEM 1.2.89

ITEM 1.2.90

ITEM 1.2.91

ITEM 1.2.92

ITEM 1.2.93

ITEM 1.2.94

ITEM 1.2.95

ITEM 1.2.96

ITEM 1.2.97

ITEM 1.2.98

ITEM 1.2.99

ITEM 1.2.100

ITEM 1.2.101

ITEM 1.2.102

ITEM 1.2.103

ITEM 1.2.104

ITEM 1.2.105

ITEM 1.2.106

ITEM 1.2.107

ITEM 1.2.108

ITEM 1.2.109

ITEM 1.2.110

ITEM 1.2.111

ITEM 1.2.112

ITEM 1.2.113

ITEM 1.2.114

ITEM 1.2.115

ITEM 1.2.116

ITEM 1.2.117

ITEM 1.2.118

ITEM 1.2.119

ITEM 1.2.120

ITEM 1.2.121

ITEM 1.2.122

ITEM 1.2.123

ITEM 1.2.124

ITEM 1.2.125

ITEM 1.2.126

ITEM 1.2.127

ITEM 1.2.128

ITEM 1.2.129

ITEM 1.2.130

ITEM 1.2.131

ITEM 1.2.132

ITEM 1.2.133

ITEM 1.2.134

ITEM 1.2.135

ITEM 1.2.136

ITEM 1.2.137

ITEM 1.2.138

ITEM 1.2.139

ITEM 1.2.140

ITEM 1.2.141

ITEM 1.2.142

ITEM 1.2.143

ITEM 1.2.144

ITEM 1.2.145

ITEM 1.2.146

ITEM 1.2.147

ITEM 1.2.148

ITEM 1.2.149

ITEM 1.2.150

ITEM 1.2.151

ITEM 1.2.152

ITEM 1.2.153

ITEM 1.2.154

ITEM 1.2.155

ITEM 1.2.156

ITEM 1.2.157

ITEM 1.2.158

ITEM 1.2.159

ITEM 1.2.160

ITEM 1.2.161

ITEM 1.2.162

ITEM 1.2.163

ITEM 1.2.164

ITEM 1.2.165

ITEM 1.2.166

ITEM 1.2.167

ITEM 1.2.168

ITEM 1.2.169

ITEM 1.2.170

ITEM 1.2.171

ITEM 1.2.172

ITEM 1.2.173

ITEM 1.2.174

ITEM 1.2.175

ITEM 1.2.176

ITEM 1.2.177

ITEM 1.2.178

ITEM 1.2.179

ITEM 1.2.180

ITEM 1.2.181

ITEM 1.2.182

ITEM 1.2.183

ITEM 1.2.184

ITEM 1.2.185

ITEM 1.2.186

ITEM 1.2.187

ITEM 1.2.188

ITEM 1.2.189

ITEM 1.2.190

ITEM 1.2.191

ITEM 1.2.192

ITEM 1.2.193

ITEM 1.2.194

ITEM 1.2.195

ITEM 1.2.196

ITEM 1.2.197

ITEM 1.2.198

ITEM 1.2.199

ITEM 1.2.200

ITEM 1.2.201

ITEM 1.2.202

ITEM 1.2.203

ITEM 1.2.204

ITEM 1.2.205

ITEM 1.2.206

ITEM 1.2.207

ITEM 1.2.208

ITEM 1.2.209

ITEM 1.2.210

ITEM 1.2.211

ITEM 1.2.212

ITEM 1.2.213

ITEM 1.2.214

ITEM 1.2.215

ITEM 1.2.216

ITEM 1.2.217

ITEM 1.2.218

ITEM 1.2.219

ITEM 1.2.220

ITEM 1.2.221

ITEM 1.2.222

ITEM 1.2.223

ITEM 1.2.224

ITEM 1.2.225

ITEM 1.2.226

ITEM 1.2.227

ITEM 1.2.228

ITEM 1.2.229

ITEM 1.2.230

ITEM 1.2.231

ITEM 1.2.232

ITEM 1.2.233

ITEM 1.2.234

ITEM 1.2.235

ITEM 1.2.236

ITEM 1.2.237

ITEM 1.2.238

ITEM 1.2.239

ITEM 1.2.240

ITEM 1.2.241

ITEM 1.2.242

ITEM 1.2.243

ITEM 1.2.244

ITEM 1.2.245

ITEM 1.2.246

ITEM 1.2.247

ITEM 1.2.248

ITEM 1.2.249

ITEM 1.2.250

ITEM 1.2.251

ITEM 1.2.252

ITEM 1.2.253

ITEM 1.2.254

ITEM 1.2.255

ITEM 1.2.256

ITEM 1.2.257

ITEM 1.2.258

ITEM 1.2.259

ITEM 1.2.260

ITEM 1.2.261

ITEM 1.2.262

ITEM 1.2.263

ITEM 1.2.264

ITEM 1.2.265

ITEM 1.2.266

ITEM 1.2.267

ITEM 1.2.268

ITEM 1.2.269

ITEM 1.2.270

ITEM 1.2.271

ITEM 1.2.272

ITEM 1.2.273

ITEM 1.2.274

ITEM 1.2.275

ITEM 1.2.276

ITEM 1.2.277

ITEM 1.2.278

ITEM 1.2.279

ITEM 1.2.280

ITEM 1.2.281

ITEM 1.2.282

ITEM 1.2.283

ITEM 1.2.284

ITEM 1.2.285

ITEM 1.2.286

ITEM 1.2.287

ITEM 1.2.288

ITEM 1.2.289

ITEM 1.2.290

ITEM 1.2.291

ITEM 1.2.292

ITEM 1.2.293

ITEM 1.2.294

ITEM 1.2.295

ITEM 1.2.296

ITEM 1.2.297

ITEM 1.2.298

ITEM 1.2.299

ITEM 1.2.300

ITEM 1.2.301

ITEM 1.2.302

ITEM 1.2.303

ITEM 1.2.304

ITEM 1.2.305

ITEM 1.2.306

ITEM 1.2.307

ITEM 1.2.308

ITEM 1.2.309

ITEM 1.2.310

ITEM 1.2.311

ITEM 1.2.312

ITEM 1.2.313

ITEM 1.2.314

ITEM 1.2.315

ITEM 1.2.316

ITEM 1.2.317

ITEM 1.2.318

ITEM 1.2.319

ITEM 1.2.320

ITEM 1.2.321

ITEM 1.2.322

ITEM 1.2.323

ITEM 1.2.324

ITEM 1.2.325

ITEM 1.2.326

ITEM 1.2.327

ITEM 1.2.328

ITEM 1.2.329

ITEM 1.2.330

ITEM 1.2.331

ITEM 1.2.332

ITEM 1.2.333

ITEM 1.2.334

ITEM 1.2.335

ITEM 1.2.336

ITEM 1.2.337

ITEM 1.2.338

ITEM 1.2.339

ITEM 1.2.340

ITEM 1.2.341

ITEM 1.2.342

ITEM 1.2.343

ITEM 1.2.344

ITEM 1.2.345

ITEM 1.2.346

ITEM 1.2.347

ITEM 1.2.348

ITEM 1.2.349

ITEM 1.2.350

ITEM 1.2.351

ITEM 1.2.352

ITEM 1.2.353

ITEM 1.2.354

ITEM 1.2.355

ITEM 1.2.356

ITEM 1.2.357

ITEM 1.2.358

ITEM 1.2.359

ITEM 1.2.360

ITEM 1.2.361

ITEM 1.2.362

ITEM 1.2.363

ITEM 1.2.364

ITEM 1.2.365

ITEM 1.2.366

ITEM 1.2.367

ITEM 1.2.368

ITEM 1.2.369

ITEM 1.2.370

ITEM 1.2.371

ITEM 1.2.372

ITEM 1.2.373

ITEM 1.2.374

ITEM 1.2.375

ITEM 1.2.376

ITEM 1.2.377

ITEM 1.2.378

ITEM 1.2.379

ITEM 1.2.380

ITEM 1.2.381

ITEM 1.2.382

ITEM 1.2.383

ITEM 1.2.384

ITEM 1.2.385

ITEM 1.2.386

ITEM 1.2.387

ITEM 1.2.388

ITEM 1.2.389

ITEM 1.2.390

ITEM 1.2.391

ITEM 1.2.392

ITEM 1.2.393

ITEM 1.2.394

ITEM 1.2.395

ITEM 1.2.396

ITEM 1.2.397

ITEM 1.2.398

ITEM 1.2.399

ITEM 1.2.400

ITEM 1.2.401

ITEM 1.2.402

ITEM 1.2.403

ITEM 1.2.404

ITEM 1.2.405

ITEM 1.2.406

ITEM 1.2.407

ITEM 1.2.408

ITEM 1.2.409

ITEM 1.2.410

ITEM 1.2.411

ITEM 1.2.412

ITEM 1.2.413

ITEM 1.2.414

ITEM 1.2.415

ITEM 1.2.416

ITEM 1.2.417

ITEM 1.2.418

ITEM 1.2.419

ITEM 1.2.420

ITEM 1.2.421

ITEM 1.2.422

ITEM 1.2.423

ITEM 1.2.424

ITEM 1.2.425

ITEM 1.2.426

ITEM 1.2.427

ITEM 1.2.428

ITEM 1.2.429

ITEM 1.2.430

ITEM 1.2.431

ITEM 1.2.432

ITEM 1.2.433

ITEM 1.2.434

ITEM 1.2.435

ITEM 1.2.436

ITEM 1.2.437

ITEM 1.2.438

ITEM 1.2.439

ITEM 1.2.440

ITEM 1.2.441

ITEM 1.2.442

ITEM 1.2.443

ITEM 1.2.444

ITEM 1.2.445

ITEM 1.2.446

ITEM 1.2.447

ITEM 1.2.448

ITEM 1.2.449

ITEM 1.2.450

ITEM 1.2.451

ITEM 1.2.452

ITEM 1.2.453

ITEM 1.2.454

ITEM 1.2.455

ITEM 1.2.456

ITEM 1.2.457

ITEM 1.2.458

ITEM 1.2.459

ITEM 1.2.460

ITEM 1.2.461

ITEM 1.2.462

ITEM 1.2.463

ITEM 1.2.464

ITEM 1.2.465

ITEM 1.2.466

ITEM 1.2.467

ITEM 1.2.468

ITEM 1.2.469

ITEM 1.2.470

ITEM 1.2.471

ITEM 1.2.472

ITEM 1.2.473

ITEM 1.2.474

ITEM 1.2.475

ITEM 1.2.476

ITEM 1.2.477

ITEM 1.2.478

ITEM 1.2.479

ITEM 1.2.480

ITEM 1.2.481

ITEM 1.2.482

ITEM 1.2.483

ITEM 1.2.484

ITEM 1.2.485

ITEM 1.2.486

ITEM 1.2.487

ITEM 1.2.488

ITEM 1.2.489

ITEM 1.2.490

ITEM 1.2.491

ITEM 1.2.492

ITEM 1.2.493

ITEM 1.2.494

ITEM 1.2.495

ITEM 1.2.496

ITEM 1.2.497

ITEM 1.2.498

ITEM 1.2.499

ITEM 1.2.500

ITEM 1.2.501

ITEM 1.2.502

ITEM 1.2.503

ITEM 1.2.504

ITEM 1.2.505

ITEM 1.2.506

ITEM 1.2.507

ITEM 1.2.508

ITEM 1.2.509

ITEM 1.2.510

ITEM 1.2.511

ITEM 1.2.512

ITEM 1.2.513

ITEM 1.2.514

ITEM 1.2.515

ITEM 1.2.516

ITEM 1.2.517

ITEM 1.2.518

ITEM 1.2.519

ITEM 1.2.520

ITEM 1.2.521

ITEM 1.2.522

ITEM 1.2.523

ITEM 1.2.524

ITEM 1.2.525

ITEM 1.2.526

ITEM 1.2.527

ITEM 1.2.528

ITEM 1.2.529

ITEM 1.2.530

ITEM 1.2.531

ITEM 1.2.532

ITEM 1.2.533

ITEM 1.2.534

ITEM 1.2.535

ITEM 1.2.536

ITEM 1.2.537

ITEM 1.2.538

ITEM 1.2.539

ITEM 1.2.540

ITEM 1.2.541

ITEM 1.2.542

ITEM 1.2.543

ITEM 1.2.544

ITEM 1.2.545

ITEM 1.2.546

ITEM 1.2.547

ITEM 1.2.548

ITEM 1.2.549

ITEM 1.2.550

ITEM 1.2.551

ITEM 1.2.552

ITEM 1.2.553

ITEM 1.2.554

ITEM 1.2.555

ITEM 1.2.556

ITEM 1.2.557

ITEM 1.2.558

ITEM 1.2.559

ITEM 1.2.560

ITEM 1.2.561

ITEM 1.2.562

ITEM 1.2.563

ITEM 1.2.564

ITEM 1.2.565

ITEM 1.2.566

ITEM 1.2.567

ITEM 1.2.568

ITEM 1.2.569

ITEM 1.2.570

ITEM 1.2.571

ITEM 1.2.572

ITEM 1.2.573

ITEM 1.2.574

ITEM 1.2.575

ITEM 1.2.576

ITEM 1.2.577

ITEM 1.2.578

ITEM 1.2.579

ITEM 1.2.580

ITEM 1.2.581

ITEM 1.2.582

ITEM 1.2.583

ITEM 1.2.584

ITEM 1.2.585

ITEM 1.2.586

ITEM 1.2.587

ITEM 1.2.588

ITEM 1.2.589

ITEM 1.2.590

ITEM 1.2.591

ITEM 1.2.592

ITEM 1.2.593

ITEM 1.2.594

ITEM 1.2.595

ITEM 1.2.596

ITEM 1.2.597

ITEM 1.2.598

ITEM 1.2.599

ITEM 1.2.600

ITEM 1.2.601

ITEM 1.2.602

ITEM 1.2.603

ITEM 1.2.604

ITEM 1.2.605

ITEM 1.2.606

ITEM 1.2.607

ITEM 1.2.608

ITEM 1.2.609

ITEM 1.2.610

ITEM 1.2.611

ITEM 1.2.612

ITEM 1.2.613

ITEM 1.2.614

ITEM 1.2.615

ITEM 1.2.616

ITEM 1.2.617

ITEM 1.2.618

ITEM 1.2.619

ITEM 1.2.620

ITEM 1.2.621

ITEM 1.2.622

ITEM 1.2.623

ITEM 1.2.624

ITEM 1.2.625

ITEM 1.2.626

ITEM 1.2.627

ITEM 1.2.628

ITEM 1.2.629

ITEM 1.2.630

ITEM 1.2.631

ITEM 1.2.632

ITEM 1.2.633

ITEM 1.2.634

ITEM 1.2.635

ITEM 1.2.636

ITEM 1.2.637

ITEM 1.2.638

ITEM 1.2.639

ITEM 1.2.640

ITEM 1.2.641

ITEM 1.2.642

ITEM 1.2.643

ITEM 1.2.644

ITEM 1.2.645

ITEM 1.2.646

ITEM 1.2.647

ITEM 1.2.648

ITEM 1.2.649

ITEM 1.2.650

ITEM 1.2.651

ITEM 1.2.652

ITEM 1.2.653

ITEM 1.2.654

ITEM 1.2.655

ITEM 1.2.656

ITEM 1.2.657

ITEM 1.2.658

ITEM 1.2.659

ITEM 1.2.660

ITEM 1.2.661

ITEM 1.2.662

ITEM 1.2.663

ITEM 1.2.664

ITEM 1.2.665

ITEM 1.2.666

ITEM 1.2.667

ITEM 1.2.668

ITEM 1.2.669

ITEM 1.2.670

ITEM 1.2.671

ITEM 1.2.672

ITEM 1.2.673

ITEM 1.2.674

ITEM 1.2.675

ITEM 1.2.676

ITEM 1.2.677

ITEM 1.2.678

ITEM 1.2.679

ITEM 1.2.680

ITEM 1.2.681

ITEM 1.2.682

ITEM 1.2.683

ITEM 1.2.684

ITEM 1.2.685

ITEM 1.2.686

ITEM 1.2.687

ITEM 1.2.688

ITEM 1.2.689

ITEM 1.2.690

ITEM 1.2.691

ITEM 1.2.692

ITEM 1.2.693

ITEM 1.2.694

ITEM 1.2.695

ITEM 1.2.696

ITEM 1.2.697

ITEM 1.2.698

ITEM 1.2.699

ITEM 1.2.700

ITEM 1.2.701

ITEM 1.2.702

ITEM 1.2.703

ITEM 1.2.704

ITEM 1.2.705

ITEM 1.2.706

ITEM 1.2.707

ITEM 1.2.708

ITEM 1.2.709

ITEM 1.2.710

ITEM 1.2.711

ITEM 1.2.712

ITEM 1.2.713

ITEM 1.2.714

ITEM 1.2.715

ITEM 1.2.716

ITEM 1.2.717

ITEM 1.2.718

ITEM 1.2.719

ITEM 1.2.720

ITEM 1.2.721

ITEM 1.2.722

ITEM 1.2.723

ITEM 1.2.724

ITEM 1.2.725

ITEM 1.2.726

ITEM 1.2.727

ITEM 1.2.728

ITEM 1.2.729

ITEM 1.2.730

ITEM 1.2.731

ITEM 1.2.732

ITEM 1.2.733

ITEM 1.2.734

ITEM 1.2.735

ITEM 1.2.736

ITEM 1.2.737

ITEM 1.2.738

ITEM 1.2.739

ITEM 1.2.740

ITEM 1.2.741

ITEM 1.2.742

ITEM 1.2.743

ITEM 1.2.744

ITEM 1.2.745

ITEM 1.2.746

ITEM 1.2.747

ITEM 1.2.748

ITEM 1.2.749

ITEM 1.2.750

ITEM 1.2.751

ITEM 1.2.752

ITEM 1.2.753

ITEM 1.2.754

ITEM 1.2.755

ITEM 1.2.756

ITEM 1.2.757

ITEM 1.2.758

ITEM 1.2.759

ITEM 1.2.760

ITEM 1.2.761

ITEM 1.2.762

ITEM 1.2.763

ITEM 1.2.764

ITEM 1.2.765

ITEM 1.2.766

ITEM 1.2.767

ITEM 1.2.768

ITEM 1.2.769

ITEM 1.2.770

ITEM 1.2.771

ITEM 1.2.772

ITEM 1.2.773

ITEM 1.2.774

ITEM 1.2.775

ITEM 1.2.776

ITEM 1.2.777

ITEM 1.2.778

ITEM 1.2.779

ITEM 1.2.780

ITEM 1.2.781

ITEM 1.2.782

ITEM 1.2.783

ITEM 1.2.784

ITEM 1.2.785

ITEM 1.2.786

ITEM 1.2.787

ITEM 1.2.788

ITEM 1.2.789

ITEM 1.2.790

ITEM 1.2.791

ITEM 1.2.792

ITEM 1.2.793

ITEM 1.2.794

ITEM 1.2.795

ITEM 1.2.796

ITEM 1.2.797

ITEM 1.2.798

ITEM 1.2.799

ITEM 1.2.800

ITEM 1.2.801

ITEM 1.2.802

ITEM 1.2.803

ITEM 1.2.804

ITEM 1.2.805

ITEM 1.2.806

ITEM 1.2.807

ITEM 1.2.808

ITEM 1.2.809

ITEM 1.2.810

ITEM 1.2.811

ITEM 1.2.812

ITEM 1.2.813

ITEM 1.2.814

ITEM 1.2.815

ITEM 1.2.816

ITEM 1.2.817

ITEM 1.2.818

ITEM 1.2.819

ITEM 1.2.820

ITEM 1.2.821

ITEM 1.2.822

ITEM 1.2.823

ITEM 1.2.824

ITEM 1.2.825

ITEM 1.2.826

ITEM 1.2.827

ITEM 1.2.828

ITEM 1.2.829

ITEM 1.2.830

ITEM 1.2.831

ITEM 1.2.832

ITEM 1.2.833

ITEM 1.2.834

ITEM 1.2.835

ITEM 1.2.836

ITEM 1.2.837

ITEM 1.2.838

ITEM 1.2.839

ITEM 1.2.840

ITEM 1.2.841

ITEM 1.2.842

ITEM 1.2.843

ITEM 1.2.844

ITEM 1.2.845

ITEM 1.2.846

ITEM 1.2.847

ITEM 1.2.848

ITEM 1.2.849

ITEM 1.2.850

ITEM 1.2.851

ITEM 1.2.852

ITEM 1.2.853

ITEM 1.2.854

ITEM 1.2.855

ITEM 1.2.856

ITEM 1.2.857

ITEM 1.2.858

ITEM 1.2.859

ITEM 1.2.860

ITEM 1.2.861

ITEM 1.2.862

ITEM 1.2.863

ITEM 1.2.864

ITEM 1.2.865

ITEM 1.2.866

ITEM 1.2.867

ITEM 1.2.868

ITEM 1.2.869

ITEM 1.2.870

ITEM 1.2.871

ITEM 1.2.872

ITEM 1.2.873

ITEM 1.2.874

ITEM 1.2.875

ITEM 1.2.876

ITEM 1.2.877

ITEM 1.2.878

ITEM 1.2.879

ITEM 1.2.880

ITEM 1.2.881

ITEM 1.2.882

ITEM 1.2.883

ITEM 1.2.884

ITEM 1.2.885

ITEM 1.2.886

ITEM 1.2.887

ITEM 1.2.888

ITEM 1.2.889

ITEM 1.2.890

ITEM 1.2.891

ITEM 1.2.892

ITEM 1.2.893

ITEM 1.2.894

ITEM 1.2.895

ITEM 1.2.896

ITEM 1.2.897

ITEM 1.2.898

ITEM 1.2.899

ITEM 1.2.900

ITEM 1.2.901

ITEM 1.2.902

ITEM 1.2.903

ITEM 1.2.904

ITEM 1.2.905

ITEM 1.2.906

ITEM 1.2.907

ITEM 1.2.908

ITEM 1.2.909

ITEM 1.2.910

ITEM 1.2.911

ITEM 1.2.912

ITEM 1.2.913

ITEM 1.2.914

ITEM 1.2.915

ITEM 1.2.916

ITEM 1.2.917

ITEM 1.2.918

ITEM 1.2.919

ITEM 1.2.920

ITEM 1.2.921

ITEM 1.2.922

ITEM 1.2.923

ITEM 1.2.924

ITEM 1.2.925

ITEM 1.2.926

ITEM 1.2.927

ITEM 1.2.928

ITEM 1.2.929

ITEM 1.2.930

ITEM 1.2.931

ITEM 1.2.932

ITEM 1.2.933

ITEM 1.2.934

ITEM 1.2.935

ITEM 1.2.936

ITEM 1.2.937

ITEM 1.2.938

ITEM 1.2.939

ITEM 1.2.940

ITEM 1.2.941

ITEM 1.2.942

ITEM 1.2.943

ITEM 1.2.944

ITEM 1.2.945

ITEM 1.2.946

ITEM 1.2.947

ITEM 1.2.948

ITEM 1.2.949

ITEM 1.2.950

ITEM 1.2.951

ITEM 1.2.952

ITEM 1.2.953

ITEM 1.2.954

ITEM 1.2.955

ITEM 1.2.956

ITEM 1.2.957

ITEM 1.2.958

ITEM 1.2.959

ITEM 1.2.960

ITEM 1.2.961

ITEM 1.2.962

ITEM 1.2.963

ITEM 1.2.964

ITEM 1.2.965

ITEM 1.2.966

ITEM 1.2.967

ITEM 1.2.968

ITEM 1.2.969

ITEM 1.2.970

ITEM 1.2.971

ITEM 1.2.972

ITEM 1.2.973

ITEM 1.2.974

ITEM 1.2.975

ITEM 1.2.976

ITEM 1.2.977

ITEM 1.2.978

ITEM 1.2.979

ITEM 1.2.980

ITEM 1.2.981

ITEM 1.2.982

ITEM 1.2.983

ITEM 1.2.984

ITEM 1.2.985

ITEM 1.2.986

ITEM 1.2.987

ITEM 1.2.988

ITEM 1.2.989

ITEM 1.2.990

ITEM 1.2.991

ITEM 1.2.992

ITEM 1.2.993

ITEM 1.2.994

ITEM 1.2.995

ITEM 1.2.996

ITEM 1.2.997

ITEM 1.2.998

ITEM 1.2.999

ITEM 1.2.1000

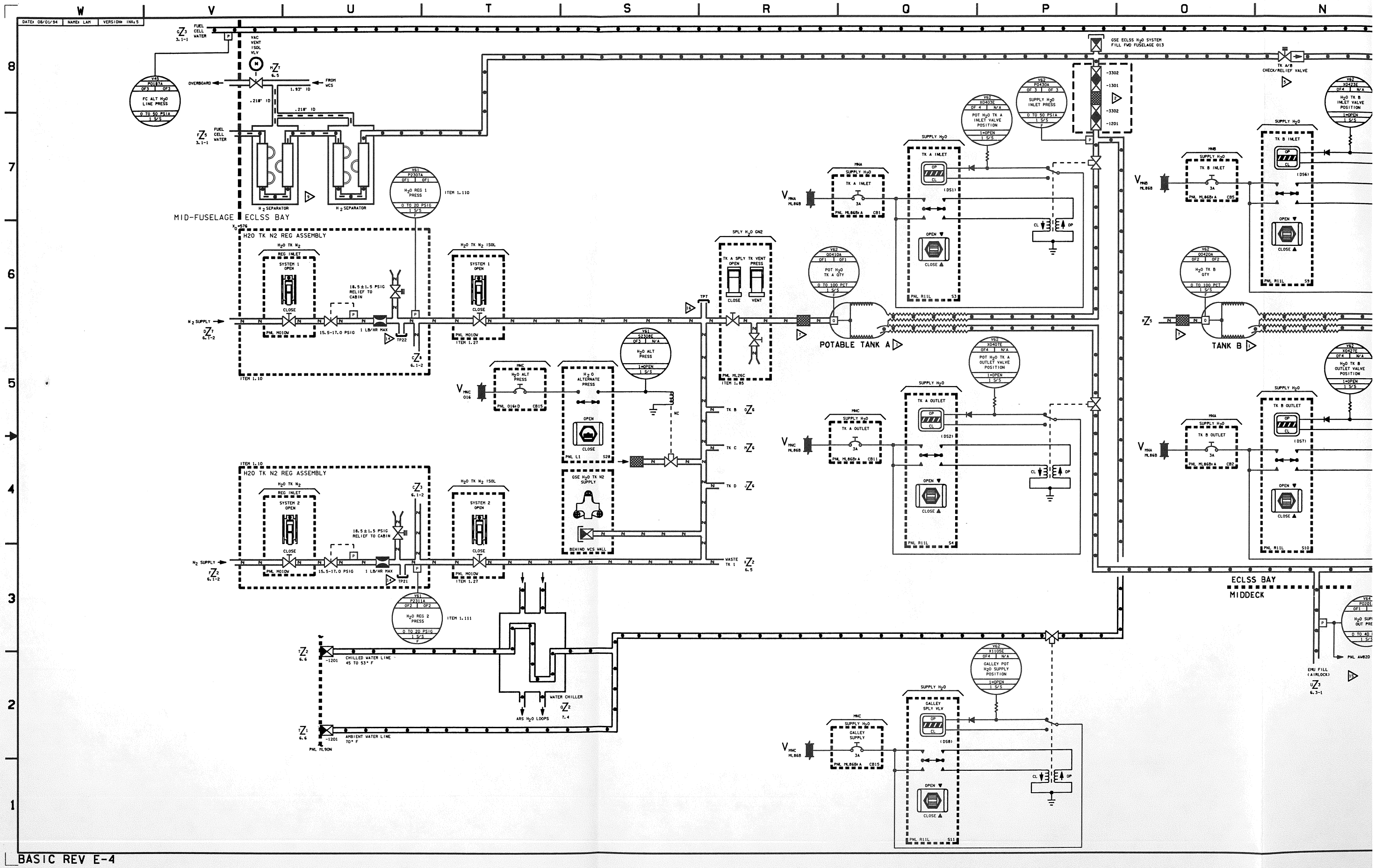
DATE: 08/01/94
NAME: LAM
VERSION: INK.5
W V U T S R Q P O N
8 7 6 5 4 3 2 1
FUEL CELL WATER
VAC VENT ISOL VLV
OVERBOARD
FROM WCS
1.93" ID
.218" ID
.218" ID
V45 P0187A
FC ALT H2O LINE PRESS
0 TO 50 PSIA
FUEL CELL WATER
H2 SEPARATOR
H2 SEPARATOR
V61 P2307A
H2O REG 1 PRESS
0 TO 20 PSIG
ITEM 1.110
MID-FUSELAGE ECLSS BAY
H20 TK N2 REG ASSEMBLY
H2O TK N2 REG INLET
SYSTEM 1 OPEN
CLOSE
PNL M01OV
18.5±1.5 PSIG RELIEF TO CABIN
15.5-17.0 PSIG
1 LB/HR MAX
TP22
H2O TK N2 ISOL
SYSTEM 1 OPEN
CLOSE
PNL M01OV ITEM 1.27
ITEM 1.10
H20 TK N2 REG ASSEMBLY
H2O TK N2 REG INLET
SYSTEM 2 OPEN
CLOSE
PNL M01OV
18.5±1.5 PSIG RELIEF TO CABIN
15.5-17.0 PSIG
1 LB/HR MAX
TP21
H2O TK N2 ISOL
SYSTEM 2 OPEN
CLOSE
PNL M01OV ITEM 1.27
V61 P2311A
H2O REG 2 PRESS
0 TO 20 PSIG
ITEM 1.111
CHILLED WATER LINE 45 TO 53° F
AMBIENT WATER LINE 70° F
PNL ML90N
WATER CHILLER
ARS H2O LOOPS
SPLY H2O GN2
TK A SPLY TK VENT PRESS
OPEN
CLOSE
VENT
PNL ML26C ITEM 1.85
TPT
TK B
TK C
TK D
WASTE TK 1
V62 X0410A
POT H2O TK A QTY
0 TO 100 PCT
V62 X0403E
POT H2O TK A INLET VALVE POSITION
1=OPEN
V62 P0430A
SUPPLY H2O INLET PRESS
0 TO 50 PSIA
SUPPLY H2O
TK A INLET
PNL R11L S3
V62 X0440E
POT H2O TK A OUTLET VALVE POSITION
SUPPLY H2O
TK A OUTLET
PNL R11L S4
V62 X1105E
GALLEY POT H2O SUPPLY POSITION
SUPPLY H2O
GALLEY SPLY VLV
GALLEY SUPPLY
PNL R11L S11
GSE ECLSS H2O SYSTEM FILL FWD FUSELAGE 013
TK A/B CHECK/RELIEF VALVE
-3302
-1301
-3302
-1201
V62 X0423E
H2O TK B INLET VALVE POSITION
SUPPLY H2O
TK B INLET
PNL R11L S2
V62 X0420A
H2O TK B QTY
TANK B
V62 X0442E
H2O TK B OUTLET VALVE POSITION
SUPPLY H2O
TK B OUTLET
PNL R11L S10
ECLSS BAY
MIDDECK
EMU FILL (AIRLOCK)
PNL AW82D
POTABLE TANK A

BASIC REV E-4

DATE: 07/15/93	NAME: JDF	VERSION: BPT: 44
DATE: 08/24/93	NAME: PSD	VERSION: BPT: 45
DATE: 09/07/93	NAME: VEM	VERSION: INK: 5

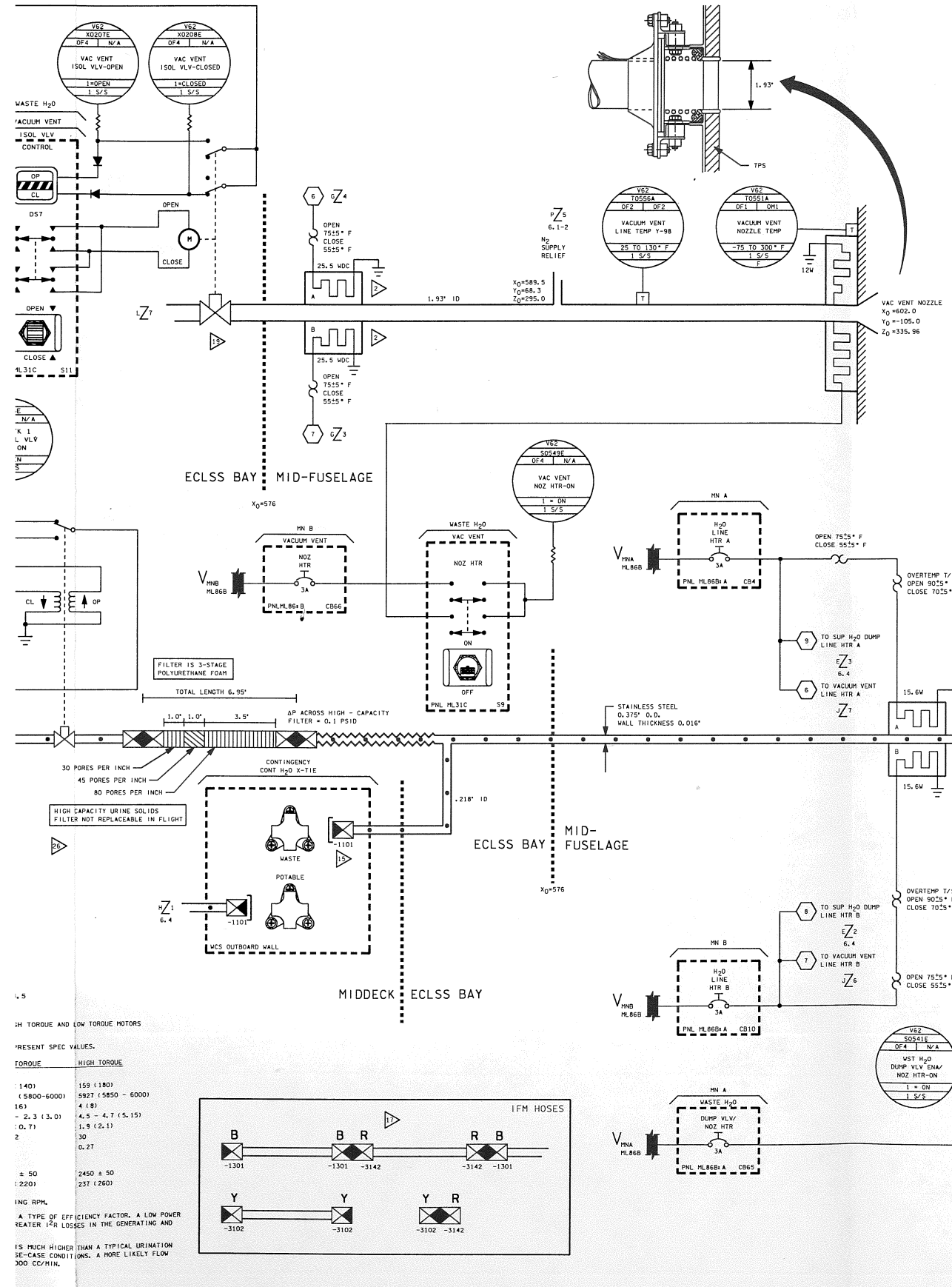

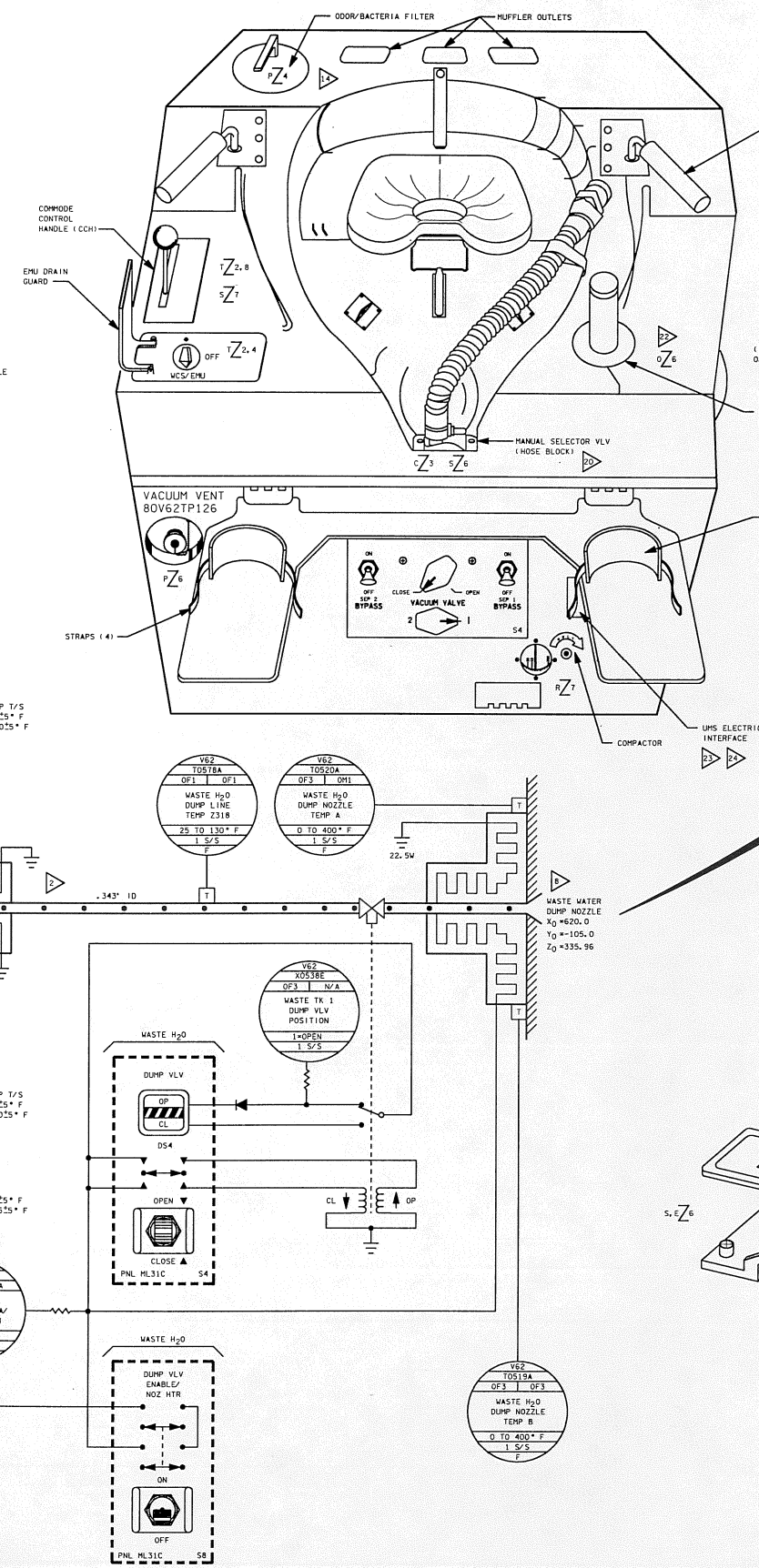

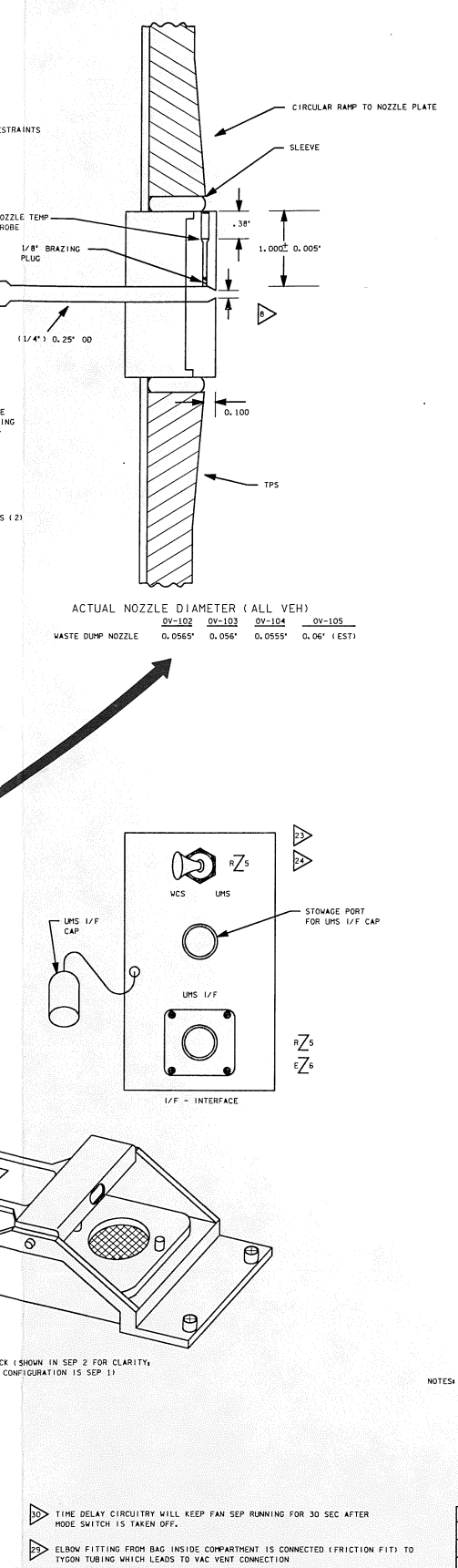

ACTUAL NOZZLE DIAMETER (ALL VEH)

	OV-102	OV-103	OV-104	OV-105
WASTE DUMP NOZZLE	0.0565"	0.056"	0.0555"	0.06" (EST)

HOSE BLOCK (SHOWN IN SEP 2 FOR CLARITY, STANDARD CONFIGURATION IS SEP 1)

▷24 A SPARE URINE SOLIDS FILTER IS CARRIED EACH FLIGHT. IT IS NOT A REPLACEMENT FOR THE INSTALLED DUMP LINE FILTER. SPARE FILTER IS DESIGNED TO BE UTILIZED IN COMBINATION WITH THE IFM Y-Y HOSE (SEE ▷1) THROUGH THE CONTINGENCY XTIE WASTE QD

▷23 LIOH BOX/ AUX WET TRASH BOX INSTALLED ON MISSION - SPECIFIC BASIS. OV-102, 104, 105 ARE SCARRED TO RECEIVE THIS CONFIG. BOX CONTAINS WET TRASH SPACE PLUS STORAGE FOR 9 CANS (TYPICALLY 8 LIOH CANS PLUS CHARCOAL OR ATCO)

▷22 WCS/UMS SWITCH (SEE NOTE 23) ALLOWS FAN SEP 1 CONTROL BY UMS ELECTRONICS WHEN IN UMS POSITION. IN WCS POSITION, CONTROL REVERTS TO WCS. UMS DRAWING AND CONTROL DETAILS CAN BE FOUND IN FLIGHT SPECIFIC CARGO SYSTEMS MANUAL

▷21 LOCATED ON A SPECIAL WCS KICKPLATE WHICH IS INSTALLED ONLY WHEN UMS IS FLOWN

▷20 BEGINNING WITH STS-58, ALL CONVENTIONAL WCS FLY ONLY THIS FLANGE FITTING ONTO WHICH THE "COFFEE CAN" (WCS TRASH CAN) AND ITS HOSE CAN FIT. THE BALLAST VLV IS NO LONGER FLOWN

▷19 THE COMPACTOR DRIVE AND ELASTIC NET SHOULD ONLY BE USED ONCE. IT MAKES ROOM IN THE COMMODE BY COMPACTING THE FECAL MATTER INTO A SMALL AREA. MAX TRAVEL IS 330°. BACKGROUND INDICATOR IS NORMALLY WHITE, AND WILL SHOW YELLOW WHEN VANE (NET) IS UNDER TRANSPORT TUBE

▷18 TO USE THE OTHER SEPARATOR, LIFT LEVER ARM UP, ROTATE THE MANUAL SELECTOR VALVE 180° AND LOCK IN PLACE

▷17 VAC VENT ISOL VLV ORIFICE IN VLV PLATE
FLOW 3.0±0.25 LBS/HR @ 14.7 PSIA INLET PRESSURE AND A DELTA P OF 6.7 PSID
ORIFICE DIA: 0.0635 TO 0.0638 INCHES
DISCHARGE COEFF.: (C_d): 0.8
KSC TESTING: 4.3±0.36 LBS/HR @ 6.7 PSID

▷16 RESERVED

▷15 IFM HOSES
- LENGTH
  - BLUE/BLUE - 10 FT
  - RED/RED - 10 FT
  - YELLOW/YELLOW - 8 FT
  - MATERIAL - TEFLON
  - DIAMETER - 1/4 IN OD
- FREE FLUID NOZZLE (NOT SHOWN) LENGTH -13 5/8"
- STOWED IN CONTINGENCY HOSE AND CABLE KIT

QD COMPATIBILITY	
-1101	-3102
-1141	-3142
-1201	-3142, -3302
-1301	-3142, -3302

▷14 TRASH CAN AND HOSES INSTALLED DURING POST INSERTION AND STOWED DURING DEORBIT PREP

▷13 ALLOWS WASTE TANK TO BE SUPPLIED TO FES IN A CONTINGENCY BY CONNECTING WASTE H2O QD TO SUPPLY H2O QD. ALSO ALLOWS DUMP NOZZLES TO BE CROSS-TIED (SEE ▷17) AND PERMITS CONTINGENCY WATER CONTAINER (CWC) TO BE USED IN THE EVENT OF A WASTE TANK LEAK

▷12 FILTER IS REMOVABLE IN FLIGHT

▷11 RESERVED

▷10 COMMODE
- VOLUME: 2.5 FT^3
- WEIGHT: 135 LBS
- COLLECTOR AIR OUTLET IS THROUGH A 0.45μ HYDROPHOBIC FILTER WHICH PREVENTS FREE LIQUID FROM EXITING COLLECTOR
- COLLECTOR AIR OUTLET HAS 20 X 20 MESH FILTER WITH .018 IN DIA WIRE, WHICH PREVENTS SOLID WASTE FROM EXITING COLLECTOR

▷11 PNL ML86B NOMENCLATURE

OV-105/104	WCS CNTLR (CB19 AND CB22)	5 AMPS
OV-103	CB19 WCS CNTLR/SLINGER	5 AMPS
	CB22 WCS CNTLR	3 AMPS
OV-102	CB19 WCS CNTLR	5 AMPS
	CB22 WCS CNTRL	5 AMPS

▷10 THE DOT (".") WAS FORMERLY KNOWN AS "PHS". STILL FUNCTIONAL. SELECTED FAN SEP WILL OPERATE, BUT INTERLOCK WITH COMMODE LINKAGE WILL NOT FUNCTION, AND COMMODE OPS NOT POSSIBLE (SLIDE VLV WILL NOT OPEN). NOTE THAT THOUGH THE POSITION IS STILL FUNCTIONAL, THE "." EMBLEM IS NO LONGER VISIBLE.

▷9 1μ HYDROPHOBIC FILTER PRECLUDES WATER FROM EXITING TANK TO N_2 SUPPLY LINES IN EVENT OF BELLOWS LEAK, BUT WATER WILL BREAK THROUGH THE HYDROPHOBIC FILTER IF THE PRESSURE IS 5 PSID ACROSS IT

▷8 DUMP NOZZLE LOCATED ON THE PORT SIDE OF THE VEHICLE
MAX FLOW RATE: 185-195 LB/HR FLUID
1.5-2.0 LB/HR AIR

▷7 AN OVAL-SHAPED CAM LOCATED AT THE END OF THE SHAFT TO WHICH THE SWITCH IS ATTACHED CLOSES THE SAME SET OF CONTACTS WHETHER THE SWITCH IS IN THE "WCS/EMU" OR "." POSITION.

▷6 SEPARATOR OUTLET CABIN ODOR/BACTERIA FILTER. CAN BE CHANGED IN FLIGHT, BUT ONLY ONE SPARE IS CARRIED ONBOARD

▷5 COMMODE REPRESS SCREEN:
SCREEN: 40 MESH, 0.0065 WIRE
LINE DIAMETER ENSURES COMMODE REPRESS IN ~20 SEC
FILTER: 0.45M ABSOLUTE
0.5 INCH DIA I.D. LINE AND VALVE ACT AS A RESTRICTOR

▷4 RESTRICTOR INSIDE DIAMETER: 1.03 INCHES
MAX FLOW: 30 CFM

▷3 REFER TO TABLE 6.1 FOR DRAWING REFERENCES

▷2 THE A AND B (REDUNDANT) LINE HEATERS ARE CONTINUOUSLY WRAPPED TOGETHER THE FULL LENGTH OF THE LINE FROM X_O = 576

NOTES:

▷1 WASTE WATER STORAGE TANK
- USABLE CAPACITY: 165 LBS
- LENGTH: 35.5 IN
- DIAMETER: 15.50 IN
- DRY WEIGHT: 39.5 LBS

*5 WMS

▷30 TIME DELAY CIRCUITRY WILL KEEP FAN SEP RUNNING FOR 30 SEC AFTER MODE SWITCH IS TAKEN OFF.

▷29 ELBOW FITTING FROM BAG INSIDE COMPARTMENT IS CONNECTED (FRICTION FIT) TO TYGON TUBING WHICH LEADS TO VAC VENT CONNECTION

▷28 VOL F WET TRASH COMPARTMENT LINE FITTING IS AN "AN" (ARMY - NAVY) TYPE

▷27 FAN SEP CONFIG IS MISSION DEPENDENT. SEE TABLE K_Z1.2

SIGNATURE		DATE	NATIONAL AERONAUTICS AND SPACE ADMINISTRATION LYNDON B. JOHNSON SPACE CENTER HOUSTON, TEXAS
DSGN L. DUMIS		10/15/78	
DR			WASTE MANAGEMENT SYSTEM
ENGR S. TRIPODI			
ENGR Stanley J. Tripodi		9/6/83	
APP L. W. Dumis		9/14/83	
APP			SPACE SHUTTLE / DWG NO 6.5
CADS S.K. Kindrell		10-4-83	ALL
LTR E	PCN 3		121 X 34 / PAGE / SHEET 1 OF 1

BASIC REV E-3

T S R Q P O N M L K J

COMMODE CONTROL

TO DEFECATION
ILL UP
IT 20 SEC
PUSH FWD

COMMODE CONTROL HANDLE (CCH) (SEAT SLIDE VALVE)

FWD

WHEN CCH FWD, SLIDE VLV OPENS

CABIN AIR

CABIN AIR RATE: 27 CFM - COMMODE SLIDE VLV OP
16 CFM - COMMODE SLIDE VLV OP WITH SEATED USER

COMPACTOR DRIVE

LIOH BOX AUX WET TRASH

WET TRASH (VOLF)

CABIN AIR

3 LB AIR/DAY AT 14.7 ATM

V62 P0505A OF1 N/A
WASTE COLLECTOR PRESSURE
0 TO 2.0 PSIA
1 S/S

27 CFM AIR (MIN)

COMMODE CONTROL HANDLE CONTROLS ACTIVATES 4 VALVES AND A S3 MICROSWITCH. COMMODE CONTROL HANDLE NOT OPERABLE IF MODE SWITCH IS IN OFF POSITION OR IN THE "0" POSITION. MODE SWITCH NOT OPERABLE IF COMMODE CONTROL HANDLE IS IN READY TO USE POSITION

22 X 22 MESH FILTER WITH .0075 IN DIA WIRE

7/8" ID

URINE FLOW RATES
0.05 LBS/SEC (NOMINAL)
0.088 LBS/SEC (MAX)

10 CFM AIR FLOW RATE (MINIMUM)

TO REMOVE THE HOSE

TO LOCK HOSE IN PLACE

20 X 20 MESH WITH .016 IN DIA WIRE

20 X 20 MESH WITH .016 IN DIA WIRE

EMU DRAIN

CCH BACK & DOWN

CCH UP OR FWD

CCH BACK & DOWN OR UP

VALVE CLOSED WHEN CCH FWD

CCH FWD

CCH BACK & DOWN OR UP

3 LB/HR AT 14.7 ATM

VACUUM VENT

PNL WCS TP 126

3 LB AIR/DAY AT 14.7 ATM

AUX WMC WET TRASH

CABIN AIR OUTBOARD (PORTSIDE) OF WCS COMPARTMENT

WCS VACUUM VALVE

CLOSE OPEN

PNL WCS VLV 5.8

MIDDECK ECLSS BAY

(EDO OV-102 AND OV-105 ONLY)

RCRS

1.93" ID

.944" ID

AIRLOCK VENT

1.93" ID

H_2 SEPARATOR OVERBOARD VENT

H_2 FLOW= ~10 SCCM OR 6 SCIM

.218" ID

LENGTH BETWEEN VACUUM VALVE AND VACUUM VENT ISOL VALVE IS 10 FEET FOR OV-103, 104 (20 FEET FOR OV-102, 105)

MN A VAC VENT ISOL VLV 3A PNL ML868B CB67

MN B VAC VENT ISOL VLV 3A PNL ML868B CB68

V62 S0205E OF4 N/A VAC VENT ISOL VLV-MN A 1=MN A 1 S/S

V62 S0206E OF4 N/A VAC VENT ISOL VLV-MN B 1=MN B 1 S/S

V62 K0207E OF4 N/A VAC VENT ISOL VLV-OPEN 1=OPEN 1 S/S

V62 K0208E OF4 N/A VAC VENT ISOL VLV-CLOSED 1=CLOSED 1 S/S

WASTE H_2O VACUUM VENT ISOL VLV BUS SELECT MN A PNL ML31C S10

WASTE H_2O VACUUM VENT ISOL VLV CONTROL DS7 OPEN CLOSE MN B PNL ML31C S11

ECLSS BAY

V62 K0533E OF1 N/A WASTE TK 1 DUMP ISOL VLV POSITION 1=OPEN 1 S/S

WASTE H_2O DUMP ISOL VLV DS3 OPEN CLOSE PNL ML31C S3

MN A WASTE H_2O DUMP ISOL 3A PNL ML868B CB17

FILTER IS 3-STAGE POLYURETHANE FOAM

TOTAL LENGTH 6.95"

1.0" 1.0" 3.5"

30 PORES PER INCH
45 PORES PER INCH
80 PORES PER INCH

HIGH CAPACITY URINE SOLIDS FILTER NOT REPLACEABLE IN FLIGHT

V62 P0500A OF2 OF2 WASTE LIQUID PRESSURE 0 TO 40 PSIG 1 S/S F

WCS/UMS

UMS

WCS

IF UMS FLOWN

TO UMS CONTROL

TO UMS CONTROL

IF UMS FLOWN

WCS/UMS SWITCH ONLY ON UMS FLIGHTS

20 X 20 MESH WITH .018 IN DIA WIRE

CAN FLOW

CABIN AIR

TRASH CAN

ALSO CALLED COFFEE CAN

THERMAL SW

OPEN 248°F

K1

THERMAL SWITCHES (ONE PER FAN SEP) ARE INTERNAL TO THEIR RESPECTIVE MOTORS

SEP 1

LIQUID

.343" ID

FAN/SEPARATOR 1

AIR

45Ω

38 CFM TO CABIN (MIN)

MUFFLER (AT REAR OF WASTE MANAGEMENT COMPARTMENT)

.09 LB/SEC (MAX)

EACH CHECK VLV CRACK/RESEAT AT 1.0 ± .25 PSI

.09 LB/SEC (MAX)

SEP 2

FAN/SEPARATOR 2

AC 1 WCS FAN SEP 1
ØA 3A PNL MA73C×E CB47 V_{AC10A}
ØB 3A PNL MA73C×E CB48 V_{AC10B}
ØC 3A PNL MA73C×E CB49 V_{AC10C}

GSE FLUSH

ECLS H_2O SYSTEM FWD FUSELAGE

ARS CONDENSATE

.218" ID

MIDDECK ECLSS BAY

V62 K0570E OF1 N/A WASTE TK 1 INLET VALVE POSITION 1=OPEN 1 S/S

WASTE H_2O TANK 1 VLV OP CL DS2 OPEN CLOSE PNL ML31C S2

MN A WASTE H_2O TK 1 VALVE 3A PNL ML868×B CB16 V_{MNA} ML86B

V62 005404 OF1 OF1 WASTE WATER TANK QUANTITY 0 TO 100 PCT 1 S/S

0.25"

WASTE TANK 1

V62 K0565E OF2 N/A WASTE TK 1 DRAIN VALVE POSITION 1=OPEN 1 S/S

WASTE H_2O TK 1 DRAIN VLV OP CL DS1 OPEN CLOSE PNL ML31C S1

MN B WASTE H_2O TK 1 DRAIN 3A PNL ML868×B CB23 V_{MNB} ML86B

ECLS H_2O SYSTEM FWD FUSELAGE O-13

GSE DRAIN

30 SEC SHUTDOWN TIME DELAY

MODE

OFF

30 SEC SHUTDOWN TIME DELAY

WCS/EMU OR "-"

WCS/EMU OR "-"

SEP 1

SEP 2

OPEN 248°F

THERMAL SW

K2

COMMODE CONTROL HANDLE (CCH)

COMMODE CONTROL VALVE ASSEMBLY

BONNET (WITH COVER REMOVED)

OFF

WCS/EMU

INTERLOCK CAM PIN DOUBLE SHEAR DOWEL PIN

ROLL PIN
COMPONENT LEVEL STOP PIN. SYSTEM LEVEL STOPS ARE ON THE COMMODE CONTROL HANDLE

COMMODE CONTROL LINKAGE PIN DOUBLE SHEAR DOWEL PIN (88 LB ON CCH TO SHEAR)

CCH LINKAGE SHOWN IN WCS/EMU POSITION

AC 2 WCS FAN SEP 2
ØA 3A PNL MA73C×E CB50 V_{AC20A}
ØB 3A PNL MA73C×E CB51 V_{AC20B}
ØC 3A PNL MA73C×E CB52 V_{AC20C}

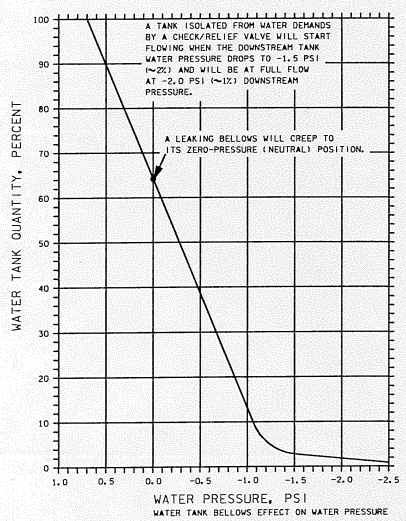

WASTE TANK BELLOWS DATA
NEUTRAL POINT= ~ 65% TANK QTY
MAX ΔP ACROSS (GAS TO LIQUID)
-OPERATIONAL= 28 PSID
-STRUCTURAL= 32 PSID
-LIFE CYCLE= 17 PSID
MAX ΔP ACROSS (LIQUID TO GAS)
-OPERATIONAL= 25 PSID
-LIFE CYCLE= 10 PSID

TYPICAL FAN SEP PARAMETERS - HIGH TORQUE AND LOW TORQUE MOTORS

NOTE: NUMBERS IN PARENTHESES REPRESENT SPEC VALUES.

	LOW TORQUE	HIGH TORQUE
DRY		
POWER (WATTS)	119 (140)	159 (180)
SPEED (RPM)	5892 (5800-6000)	5927 (5850 - 6000)
START UP TIME (SEC)[1]	11 (16)	4 (8)
START CURRENT (AMPS)	2.1 - 2.3 (3.0)	4.5 - 4.7 (5.15)
RUN CURRENT (AMPS)	0.7 (0.7)	1.9 (2.1)
MIN START TORQUE (IN-OZ)	16 ± 2	30
MIN POWER FACTOR[2]	0.50	0.27
WET		
FLOW (CC/MIN)[3]	2450 ± 50	2450 ± 50
POWER (WATTS)	181 (220)	237 (260)

1. TIME TO REACH NOMINAL OPERATING RPM.

2. POWER FACTOR IS A MEASURE OF A TYPE OF EFFICIENCY FACTOR. A LOW POWER FACTOR MEANS MORE CURRENT AND GREATER I^2R LOSSES IN THE GENERATING AND TRANSMITTING EQUIPMENT.

3. THE FLOW USED IN THIS CHART IS MUCH HIGHER THAN A TYPICAL URINATION AND WAS USED TO DEMONSTRATE WORSE-CASE CONDITIONS. A MORE LIKELY FLOW MEASURES NO HIGHER THAN ABOUT 2000 CC/MIN.

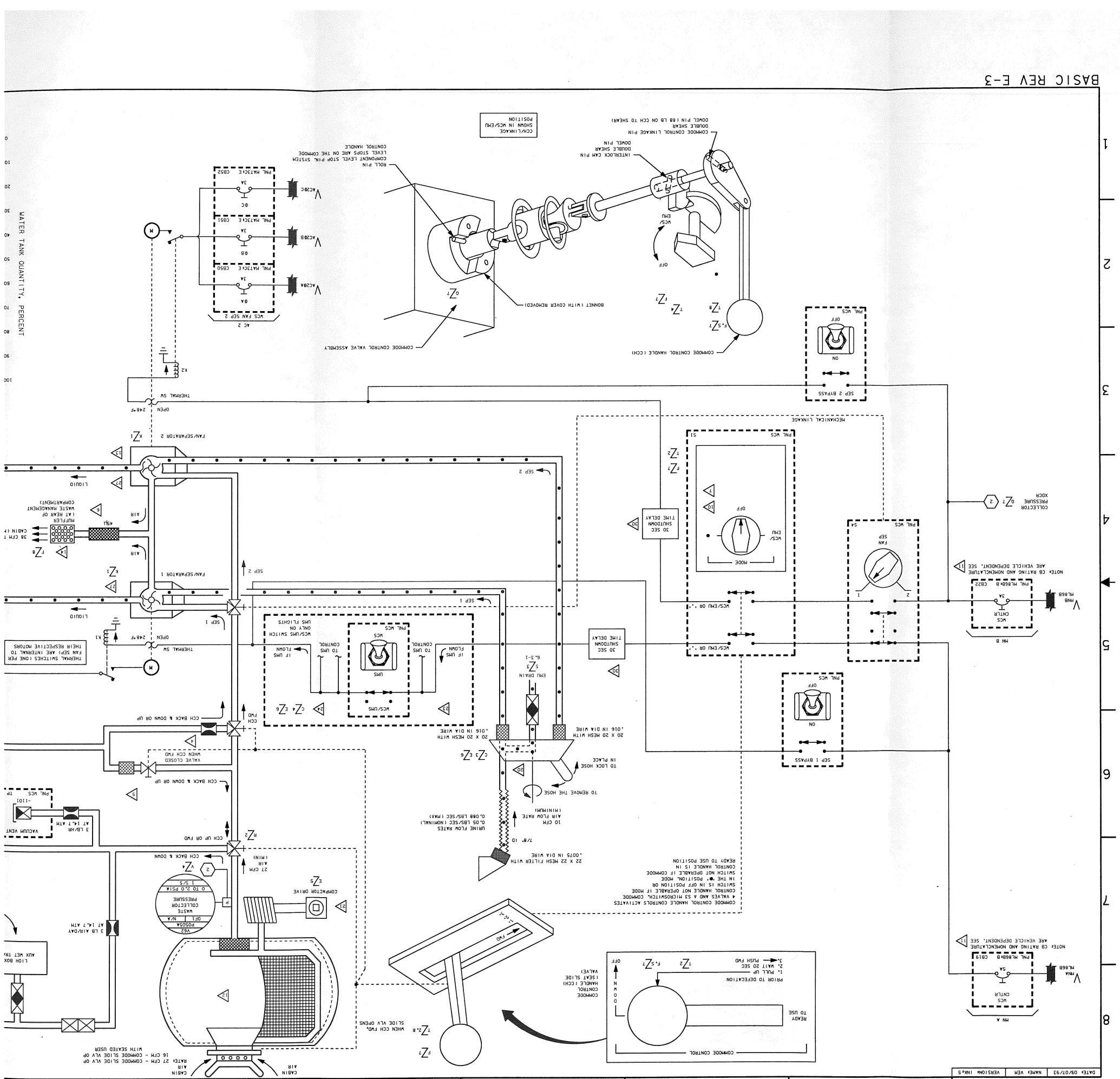
WATER TANK QUANTITY, PERCENT
COMPOSITE CONTROL LINKAGE SHOWN IN WCS/EMU POSITION
COMPOSITE CONTROL LINKAGE PIN
DOUBLE SHEAR
DOWEL PIN (68 LB ON CCH TO SHEAR)
INTERLOCK CAM PIN
DOUBLE SHEAR
DOWEL PIN
ROLL PIN
COMPONENT LEVEL STOP PIN. SYSTEM LEVEL STOPS ARE ON THE COMPOSITE CONTROL HANDLE
COMPOSITE CONTROL VALVE ASSEMBLY
BONNET (WITH COVER REMOVED)
COMPOSITE CONTROL HANDLE (CCH)
WCS/EMU
OFF
PNL WCS
ON
OFF
SEP 2 BYPASS
AC 2
VAC2PH
VAC2PB
VAC2PA
PNL MA73CXE CB52
PNL MA73CXE CB51
PNL MA73CXE CB50
2A
0C
0B
0A
THERMAL SW
OPEN
240°F
K2
FAN/SEPARATOR 2
FAN/SEPARATOR 1
SEP 2
SEP 1
LIQUID
AIR
48SL
MUFFLER (AT REAR OF WASTE MANAGEMENT COMPARTMENT)
38 CFM TO CABIN (+
CABIN AIR
RATE 27 CFM - COMPOSITE SLICE VLV OP
16 CFM - COMPOSITE SLICE VLV OP WITH SEATED USER
SLICE VLV OPENS
WHEN CCH FWD
FWD
COMPOSITE CONTROL HANDLE (CCH) (SEAT SLICE VALVE)
OFF
PUSH FWD
3s
READY TO USE
PRIOR TO DEFECATION
2. WAIT 20 SEC
1. PULL UP
COMPOSITE CONTROL
COMPACTOR DRIVE
WASTE COLLECTOR PRESSURE
P0502A
VAC
P
0 TO 2.0 PSIA
1 S/S
PVI
N/A
3 LB AIR/DAY AT 14.7 ATM
LiOH BOX AUX WET TRA
VACUUM VENT
3 LB/HR AT 14.7 ATM
-1101
TP
CCH BACK & DOWN OR UP
CCH FWD
VALVE CLOSED WHEN CCH FWD
CCH UP OR FWD
CCH BACK & DOWN
27 CFM AIR (MIN)
22 X 22 MESH FILTER WITH .0075 IN DIA WIRE
7/8" ID
10 CFM AIR FLOW RATE (MINIMUM)
UBINE FLOW RATES
0.05 LBS/SEC (NOMINAL)
0.088 LBS/SEC (MAX)
TO REMOVE THE HOSE
TO LOCK HOSE IN PLACE
20 X 20 MESH WITH .016 IN DIA WIRE
20 X 20 MESH WITH .016 IN DIA WIRE
EMU DRAIN
6.3-1
30 SEC SHUTDOWN TIME DELAY
30 SEC SHUTDOWN TIME DELAY
COMPOSITE CONTROLS ACTIVATES 4 VALVES AND A 53 MICROSWITCH. COMPOSITE CONTROL HANDLE NOT OPERABLE IF MODE SWITCH NOT OPERABLE IF COMPOSITE CONTROL HANDLE IS IN READY TO USE POSITION
MECHANICAL LINKAGE
PNL WCS
S1
MODE
WCS/EMU
OFF
WCS/EMU OR *
PNL WCS
S4
FAN
SEP
1
2
WCS/UMS
UMS
PNL WCS
IF UMS FLOW
TO UMS CONTROL
WCS/UMS SWITCH ONLY ON IF LIGHTS
THERMAL SWITCHES (ONE PER FAN SEP) ARE INTERNAL TO THEIR RESPECTIVE MOTORS
COLLECTOR PRESSURE XDCR
NOTE: CB RATING AND NOMENCLATURE ARE VEHICLE DEPENDENT. SEE
PNL MLB68A-B CB52
PNL MLB68A-B CB19
WCS CNTLR
MN B
MN A
MN8
MN9
MLB68
5A
3A
DATE 09/07/93
NAMEX VEM
VERSION INK45

DATE: 07/07/94	NAME: BJB	VERSION: BPT, 8
DATE: 07/11/94	NAME: JMB	VERSION: BPT, 9
DATE: 07/18/94	NAME: JMB	VERSION: INK, 8

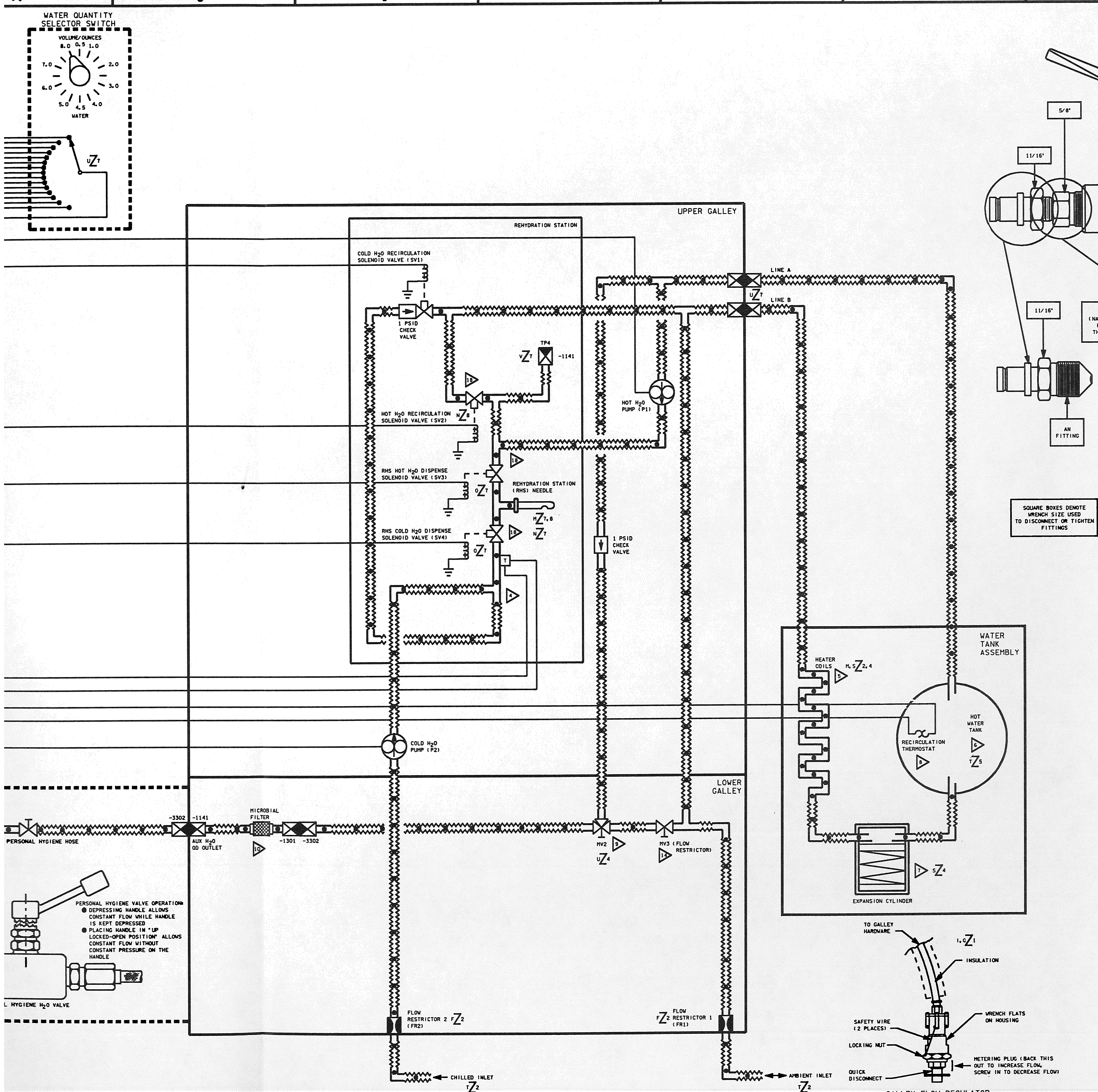

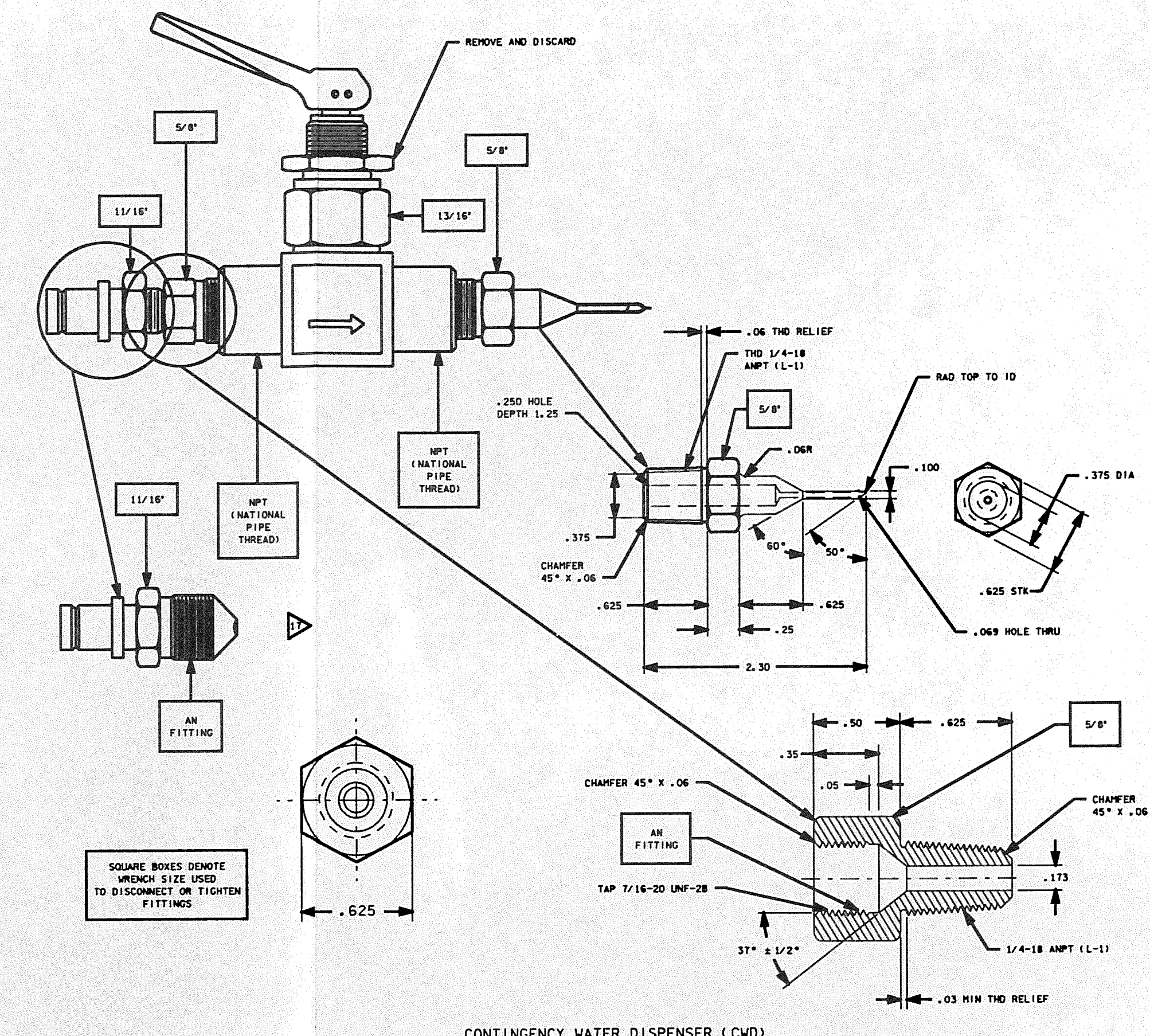

CONTINGENCY WATER DISPENSER (CWD)

NOTES:

13. TWO FIRE PORTS EXIST ON THE REPACKAGED GALLEY - ONE JUST BELOW THE MV2 VALVE AND ONE ON THE LEFT CORNER OF THE TOP FACE (SEE DRAWING LOCATIONS T3 AND P8

12. THE TWO HINGES AND THE LATCH PIN ALLOW THE REPACKAGED GALLEY TO BE TILTED OUTWARD 45 DEGREES ON THE BOTTOM HINGES

11. TEST CONNECTORS ARE USED BY GROUND SUPPORT TO CHECK THE OPEN/CLOSE OPERATION OF HEATER THERMOSTATS

10. MICROBIAL FILTER: RESIN IMPREGNATED WITH TRIIODIDE (I_3) TO INHIBIT BACTERIAL GROWTH/REPRODUCTION. ALSO KNOWN AS THE MICROBIAL CHECK VALVE (MCV) BUT THIS IS A MISNOMER BECAUSE IT IS NOT A WATER CHECK VALVE

9. OPENING THE MV2 VALVE ALLOWS HOT WATER TO MIX WITH THE AMBIENT TEMPERATURE WATER BEING SUPPLIED TO THE AUX H_2O OD OUTLET (AUXILIARY PORT)

8. WHEN THE HOT WATER TEMPERATURE AT THE HOT WATER RECIRCULATION THERMOSTAT DROPS BELOW 145±5°F, THE CONTROL ELECTRONICS ASSEMBLY OPENS THE HOT H_2O RECIRCULATION SOLENOID VALVE (SV2) AND STARTS THE HOT H_2O PUMP (P1) TO RECIRCULATE HOT WATER. THE RECIRCULATION PATH RUNS FROM THE HOT WATER TANK THROUGH P1, SV2, AND THE HEATING COIL AND BACK TO THE HOT WATER TANK. WHEN THE RECIRCULATION THERMOSTAT TEMPERATURE REACHES 165±5°F, THE CEA STOPS THE RECIRCULATION PROCESS. TO KEEP THE WATER IN THE HOT WATER TANK HOT, IT MUST BE RECIRCULATED PERIODICALLY BECAUSE THE WATER IS HEATED IN THE LINE WHICH FEEDS THE TANK RATHER THAN IN THE TANK ITSELF

7. THE EXPANSION CYLINDER PROVIDES A VOLUME FOR HOT WATER EXPANSION FROM THE HOT WATER TANK IN THE EVENT THAT THE TANK IS OVERHEATED. THIS CYLINDER REPLACES THE FUNCTION OF THE OLD MV3 VALVE ON THE OLD GALLEY. PREVIOUSLY, IF THE WATER TANK WAS OVERHEATED WATER WOULD EXPAND AND FLOW BACK THROUGH THE AMBIENT INLET AND INTO THE SH20 SYSTEM. THE MAXIMUM VOLUME OF THE EXPANSION CYLINDER IS 7.5 CU. IN. OR ABOUT 1/2 A CUP

THE PREVIOUS VERSION OF THE GALLEY HAD AN MV4 VALVE THAT ALLOWED FOR BLEEDOUT OF AIR DURING GROUND SERVICING. THIS VALVE WHICH HAS BECOME OBSOLETE HAS BEEN REMOVED ON THE REPACKAGED GALLEY

6. WATER TANK CAPACITY IS 12 LBM. THE WATER TANK IS LOCATED OUTSIDE THE REPACKAGED GALLEY ON THE PORT SIDE. INSULATION ENCLOSES THE BOTTOM AND CIRCUMFERENCE OF THE WATER TANK/COIL ASSEMBLY. THE EXTERNAL DIMENSIONS OF THE WATER TANK ARE 12 INCHES IN DIAMETER AND 5.2 INCHES IN LENGTH

5. AMBIENT TEMPERATURE WATER ENTERS A HEATER COIL ASSEMBLY CONSISTING OF THREE 12.66 INCH DIAMTER COILS OF STAINLESS STEEL TUBING. EACH COIL HAS 2 STRIP HEATERS BONDED ON THE OUTSIDE OF THE TUBE SURFACE. A SMALL AIRSPACE EXISTS BETWEEN EACH COIL AND THE WATER TANK. HEATER COIL SETS EXTEND ABOUT 1/3 OF THE CIRCUMFERENCE OF THE TANK

4. WHEN THE COLD WATER TEMPERATURE SENSED BY THE RESISTANCE TEMPERATURE DETECTOR (RTD) EXCEEDS 60°F, THE CONTROL ELECTRONICS ASSEMBLY (CEA) OPENS THE COLD H_2O RECIRCULATION SOLENOID VALVE (SV1) AND STARTS THE COLD H_2O PUMP (P2) TO RECIRCULATE COLD WATER FOR A MINIMUM OF 10 SECONDS. IF, AFTER 10 SECONDS OF RECIRCULATION, THE TEMPERATURE AT THE RTD IS BELOW 55°F, THEN THE CEA WILL TERMINATE RECIRCULATION. THE RECIRCULATION PATH RUNS FROM THE WATER CHILLER THROUGH P2 AND SV1 AND RETURNS TO THE SUPPLY WATER SYSTEM THROUGH THE AMBIENT WATER INLET. IF THE WATER IN THE WATER CHILLER IS ABOVE THE RTD RESET POINT OF 55°F, DUE TO HIGHER THAN NORMAL ARS H_2O COOLANT LOOP TEMPERATURES FOR EXAMPLE, THE CEA WILL INHIBIT THE RECIRCULATION PROCESS AFTER 20 SECONDS. THE CEA WILL REINITIATE RECIRCULATION IF AND WHEN THE RTD TEMPERATURE EXCEEDS 60°F. COLD WATER RECIRCULATION INHIBIT LASTS FOR FIVE MINUTES, AFTER WHICH TIME THE CEA WILL REINITIATE RECIRCULATION IF AND WHEN THE RTD TEMPERATURE EXCEEDS 60°F. COLD WATER RECIRCULATION WAS IMPLEMENTED TO INSURE THAT THE COLDEST AVAILABLE WATER WAS IMMEDIATELY AVAILABLE AT THE REHYDRATION STATION. THIS TIMED COLD WATER RECIRCULATION PROCESS IS DESIGNED TO PREVENT CONTINUOUS COLD WATER RECIRCULATION IN THE EVENT THE WATER CHILLER TEMPERATURE IS ABOVE THE RESET POINT

3. DEPRESSION OF THE BLUE COLD WATER PUSHBUTTON ALLOWS DISPENSING OF COLD WATER FROM THE WATER CHILLER. THE BLUE COLD PUSHBUTTON WILL ILLUMINATE WHEN ACTUATED. WHEN SELECTED VOLUME OF WATER HAS BEEN DISPENSED, THE PUSHBUTTON WILL BEGIN TO FLASH ON AND OFF. THE LIGHT WILL EXTINGUISH WHEN THE REHYDRATION STATION (RHS) PACKAGE SWITCH IS OPENED BY RETRACTING THE FOOD/DRINK PACKAGE. THE SPECIFIC FUNCTIONS THAT OCCUR WHEN THE COLD PUSHBUTTON IS DEPRESSED ARE:

- THE CONTROL ELECTRONICS ASSEMBLY (CEA) OPENS COLD H_2O RECIRCULATION SOLENOID VALVE (SV1) AND STARTS COLD H_2O PUMP (P2). COLD WATER IS RECIRCULATED FOR THREE SECONDS TO PURGE THE LINE
- WHEN THREE SECONDS ARE UP, THE CEA CLOSES SV1 AND OPENS COLD H_2O DISPENSE SOLENOID VALVE (SV4) TO DISPENSE THE SELECTED QUANTITY
- WHEN DISPENSE OF THE SELECTED QUANTITY IS COMPLETE, THE CEA CLOSES SV4 AND STOPS PUMP P2. QUANTITY DISPENSED IS A FUNCTION OF TIME AND IS CONTROLLED BY A TIMER IN THE CEA

2. DEPRESSION OF THE YELLOW HOT WATER PUSHBUTTON ALLOWS DISPENSING OF HOT WATER FROM THE HOT WATER TANK. THE YELLOW HOT WATER PUSHBUTTON WILL ILLUMINATE WHEN ACTUATED. WHEN SELECTED VOLUME OF WATER HAS BEEN DISPENSED, THE PUSHBUTTON WILL BEGIN TO FLASH ON AND OFF. THE LIGHT WILL EXTINGUISH WHEN THE REHYDRATION STATION (RHS) PACKAGE SWITCH IS OPENED BY RETRACTING THE FOOD/DRINK PACKAGE. THE SPECIFIC FUNCTIONS THAT OCCUR WHEN THE HOT PUSHBUTTON IS DEPRESSED ARE:

- THE CONTROL ELECTRONICS ASSEMBLY (CEA) OPENS HOT H_2O RECIRCULATION SOLENOID VALVE (SV2) AND STARTS HOT H_2O PUMP (P1). HOT WATER IS RECIRCULATED FOR THREE SECONDS TO PURGE THE LINE
- WHEN THREE SECONDS ARE UP, THE CEA CLOSES SV2 AND OPENS THE RHS HOT H_2O DISPENSE SOLENOID VALVE (SV3) TO DISPENSE THE SELECTED QUANTITY
- WHEN DISPENSE OF THE SELECTED QUANTITY IS COMPLETE, THE CEA CLOSES SV3 AND STOPS PUMP P1. QUANTITY DISPENSED IS A FUNCTION OF TIME AND IS CONTROLLED BY A TIMER IN THE CEA

1. THE REHYDRATION STATION (RHS) PACKAGE SWITCH SERVES AS AN INTERLOCK SWITCH WHICH MUST BE CLOSED BEFORE THE RHS WATER DISPENSING SYSTEM WORKS. THIS IS ACHIEVED BY INSERTING AND PUSHING IN A FOOD/DRINK PACKAGE TO DEPRESS THE SWITCH TO THE CLOSED POSITION. ONCE WATER HAS BEEN DISPENSED, THE SWITCH MUST BE OPENED AND THEN CLOSED AGAIN BEFORE MORE WATER CAN BE DISPENSED. WHILE THE RHS PACKAGE SWITCH IS DEPRESSED, RECIRCULATION IS INHIBITED WITH ONE EXCEPTION. SWITCHING OVEN/RHS-ON, ACTIVATES AN INITIALIZATION PROCESS WHERE BOTH HOT AND COLD H_2O RECIRCULATE FOR 40 SECONDS, DURING WHICH TIME REHYDRATION STATION (RHS) DISPENSE IS INHIBITED. HAVING THE RHS PACKAGE SWITCH DEPRESSED WILL NOT INHIBIT THIS INITIALIZATION RECIRCULATION PROCESS

19. REHYDRATION STATION DISPENSE TIMES

QUANTITY (OUNCES)	COLD TIME (SECONDS)	HOT TIME (SECONDS)
0.5	0.92	0.86
1.0	2.06	1.89
1.5	3.08	3.04
2.0	4.06	4.41
2.5	5.11	5.79
3.0	6.13	7.17
3.5	7.14	8.55
4.0	8.16	9.92
4.5	9.18	11.30
5.0	10.20	12.68
5.5	11.22	14.06
6.0	12.24	15.43
6.5	13.25	16.81
7.0	14.27	18.19
7.5	15.29	19.56
8.0	16.31	20.94

18. LABORATORY TESTING HAS SHOWN THAT THE HOT WATER SOLENOID VALVE COULD POTENTIALLY BACKFLOW AIR INTO THE GALLEY LINES AT A DELTA PRESSURE OF 3.525 PSID. LIKEWISE, THE COLD WATER SOLENOID COULD DO THE SAME AT A DELTA PRESSURE OF 4.775 PSID. THIS DELTA EQUATES TO THE DIFFERENCE IN PRESSURE SEEN AT THE RHS NEEDLE AND POTABLE H2O TANK A SUPPLY PRESSURE. AIR COULD BE DRAWN IN WHEN THIS DELTA IS EXCEEDED

17. CONTINGENCY WATER DISPENSER (CWD) IS CONNECTED TO EITHER THE AMBIENT OR CHILLED QD'S ON ML90N VIA THE IFM RED-RED HOSE. CWD IS LOCATED IN THE IFM CONTINGENCY HOSE AND CABLE KIT, AND IS USED IN THE EVENT THAT DISPENSE OF POTABLE WATER THROUGH THE RHS IS NO LONGER POSSIBLE OR DESIRED

16. BOTH WATER HEATER SWITCHES MUST BE IN THE 'ON' POSITION TO RECEIVE & TELEMETERED 'POTABLE HOT H_2O HEATER - ON' INDICATION

15. THE WATER HEATER SWITCHES AND THE OVEN/RHS SWITCH ARE SENSED CIRCUIT BREAKER TOGGLE SWITCHES. WHEN A TOGGLE IS IN AN 'ON' POSITION AND CURRENT EXCEEDS 10 AMPS, THE BREAKERS WILL OPEN AND THE TOGGLE WILL MOVE TO THE 'OFF' POSITION. IF ONE OF THESE CIRCUIT BREAKERS DETERIORATES AND OPENS WHILE THE TOGGLE IS IN THE 'ON' POSITION, THE OTHER BREAKER WILL OPEN AND THE TOGGLE WILL GO TO THE 'OFF' POSITION. NOTE: DURING NOMINAL OPERATIONS, A CLOSED SWITCH COULD BE AN INDICATION OF A CURRENT SPIKE

14. MV3 ON THE REPACKAGED GALLEY HAD A DIFFERENT LOCATION AND FUNCTION THAN THE OLD MV3 ON THE GALLEY. THE REPACKAGED GALLEY MV3 ACTS ONLY AS A FLOW RESTRICTOR TO THE AMBIENT FEED INTO MV2 AND IS ALWAYS OPEN. THIS VALVE IS INTERNAL TO THE REPACKAGED GALLEY

CEA DISPENSE/RECIRC LOGIC:

POWER ON INITIAL RECIRC......40 SECONDS
(WHEN OVEN/RHS-ON, SORG GOES THROUGH INITIALIZATION PROCESS. BOTH HOT AND COLD WATER PUMPS CIRCULATE AND THE RHS DISPENSE IS INHIBITED)

COLD RECIRC:

IF COLD THERMOSTAT TEMP EXCEEDS 60 DEG F, THE COLD WATER PUMP CIRCULATES:
COLD RECIRCULATION...............10 SECONDS (MIN)

IF TEMP EXCEEDS 55 DEG F, THE PUMP CIRCULATES ANOTHER 10 SEC
COLD RECIRCULATION...............20 SECONDS (INITIAL 10 SEC + ANOTHER 10 SEC)

IF TEMP STILL EXCEEDS 55 DEG F, THE PUMP IS INHIBITED FOR 5 MINUTES
COLD TIME OUT.............. 5 MINUTES (MAX). WHEN COLD TEMP REACHES 60 DEG F, COLD RECIRC PROCESS STARTS AGAIN

HOT RECIRC:

THE HOT WATER CIRCULATION STARTS WHEN TEMP DROPS BELOW 145 DEG F AND STOPS WHEN TEMP EXCEEDS 165 DEG F

DISPENSE PROCESS:

1. DISPENSE AMOUNT IS SELECTED (0.5 TO 8 OUNCES)
2. BEVERAGE OR FOOD CONTAINER IS PLACED IN THE RHS
3. DEPRESS EITHER THE BLUE (COLD) OR YELLOW (HOT) PUSH - BUTTON
4. THE LINE IS THEN PURGED OF STANDING WATER - THE RECIRC VALVE IS OPENED AND THE COLD OR HOT WATER RECIRC PUMP OPERATES FOR 3 SECONDS. DISPENSE IS INH DURING THIS TIME
5. THE RECIRC VALVE CLOSES AND THE DISPENSE VALVE OPENS. WHEN DISPENSE IS COMPLETE, SELECTED BUTTON FLASHES

*6 RPGD GLY

SIGNATURE	DATE	NATIONAL AERONAUTICS AND SPACE ADMINISTRATION LYNDON B. JOHNSON SPACE CENTER HOUSTON, TEXAS
DSGN M. MURPHY	5/4/84	
DR B. TEDDER JR.		REPACKAGED GALLEY
ENGR S. TRIPODI		
ENGR [signature]	7/20/94	
APR [signature]	7/20/94	
APP		SPACE SHUTTLE — DWG NO 6.6
CADS S.K. Kimbree	7-21-94	ALL
LTR E	PCN 4	126.5 X 34 — PAGE — SHEET 1 OF 1

BASIC REV E-4

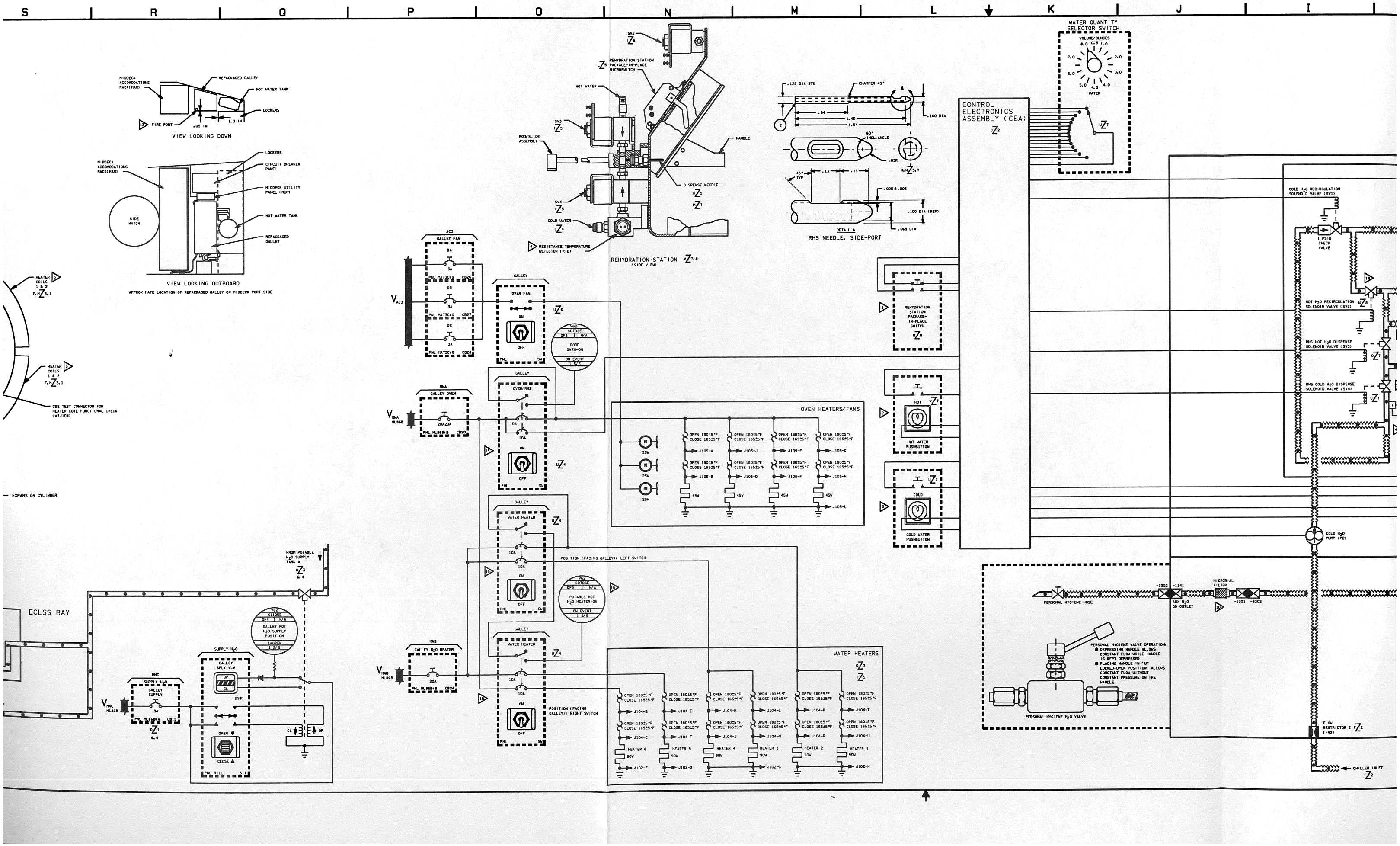

S
R
Q
P
O
N
M
L
K
J
I
MIDDECK ACCOMODATIONS RACK(MAR)
REPACKAGED GALLEY
HOT WATER TANK
LOCKERS
FIRE PORT
.05 IN
1.0 IN
VIEW LOOKING DOWN
MIDDECK ACCOMODATIONS RACK(MAR)
LOCKERS
CIRCUIT BREAKER PANEL
MIDDECK UTILITY PANEL (MUP)
SIDE HATCH
HOT WATER TANK
REPACKAGED GALLEY
VIEW LOOKING OUTBOARD
APPROXIMATE LOCATION OF REPACKAGED GALLEY ON MIDDECK PORT SIDE
HEATER COILS 1 & 2
GSE TEST CONNECTOR FOR HEATER COIL FUNCTIONAL CHECK (ATJ104)
EXPANSION CYLINDER
ECLSS BAY
FROM POTABLE H2O SUPPLY TANK A
GALLEY POT H2O SUPPLY POSITION
SUPPLY H2O
GALLEY SPLY VLV
GALLEY SUPPLY
SUPPLY H2O
REHYDRATION STATION PACKAGE-IN-PLACE MICROSWITCH
HOT WATER
ROD/SLIDE ASSEMBLY
HANDLE
DISPENSE NEEDLE
COLD WATER
RESISTANCE TEMPERATURE DETECTOR (RTD)
REHYDRATION STATION (SIDE VIEW)
.125 DIA STK
CHAMFER 45°
.94
1.46
1.54
.100 DIA
60° INCL. ANGLE
.03R
45° TYP
.13
.13
.025 ± .005
.100 DIA (REF)
.069 DIA
DETAIL A
RHS NEEDLE, SIDE-PORT
WATER QUANTITY SELECTOR SWITCH
VOLUME/OUNCES
WATER
CONTROL ELECTRONICS ASSEMBLY (CEA)
AC3
GALLEY FAN
GALLEY
OVEN FAN
ON
OFF
FOOD OVEN-ON
ON EVENT 1 S/S
MNA
GALLEY OVEN
OVEN/RHS
OVEN HEATERS/FANS
OPEN 180±5°F CLOSE 165±5°F
J105-A
J105-B
J105-J
J105-D
J105-E
J105-F
J105-K
J105-H
J105-L
45W
25W
REHYDRATION STATION PACKAGE-IN-PLACE SWITCH
HOT
HOT WATER PUSHBUTTON
COLD
COLD WATER PUSHBUTTON
WATER HEATER
POSITION (FACING GALLEY): LEFT SWITCH
POTABLE HOT H2O HEATER-ON
MNB
GALLEY H2O HEATER
POSITION (FACING GALLEY): RIGHT SWITCH
WATER HEATERS
HEATER 6
HEATER 5
HEATER 4
HEATER 3
HEATER 2
HEATER 1
90W
J102-F
J102-D
J102-G
J102-H
COLD H2O RECIRCULATION SOLENOID VALVE (SV1)
1 PSID CHECK VALVE
HOT H2O RECIRCULATION SOLENOID VALVE (SV2)
RHS HOT H2O DISPENSE SOLENOID VALVE (SV3)
RHS COLD H2O DISPENSE SOLENOID VALVE (SV4)
COLD H2O PUMP (P2)
PERSONAL HYGIENE HOSE
AUX H2O OD OUTLET
MICROBIAL FILTER
PERSONAL HYGIENE VALVE OPERATION:
● DEPRESSING HANDLE ALLOWS CONSTANT FLOW WHILE HANDLE IS KEPT DEPRESSED
● PLACING HANDLE IN "UP LOCKED-OPEN POSITION" ALLOWS CONSTANT FLOW WITHOUT CONSTANT PRESSURE ON THE HANDLE
PERSONAL HYGIENE H2O VALVE
FLOW RESTRICTOR 2 (FR2)
CHILLED INLET

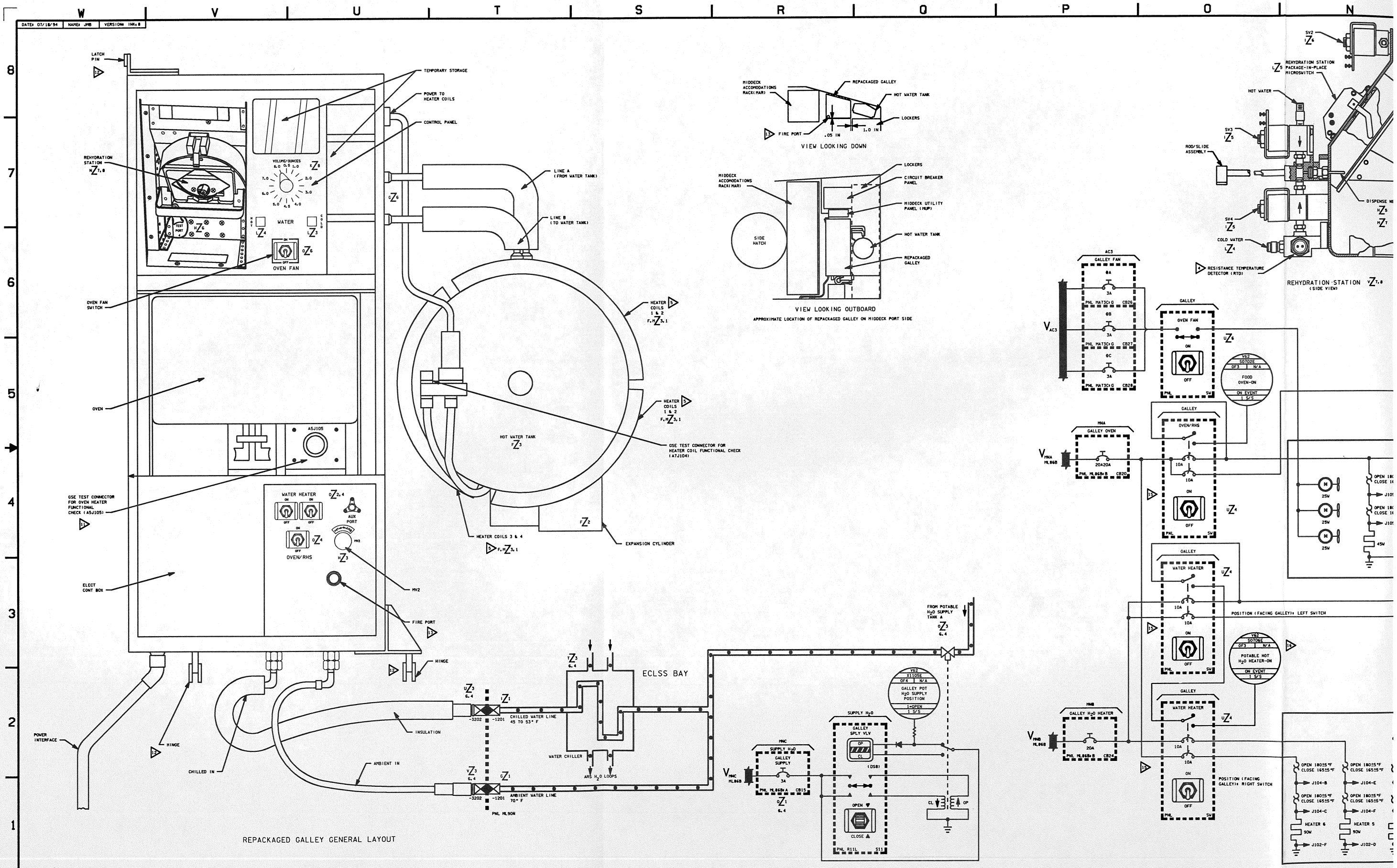

DATE: 07/18/94
NAME: JMB
VERSION: INK.8
LATCH PIN
TEMPORARY STORAGE
POWER TO HEATER COILS
CONTROL PANEL
REHYDRATION STATION
VOLUME/OUNCES
WATER
OVEN FAN
OVEN FAN SWITCH
OVEN
A5J105
GSE TEST CONNECTOR FOR OVEN HEATER FUNCTIONAL CHECK (A5J105)
WATER HEATER
AUX PORT
OVEN/RHS
ELECT CONT BOX
MV2
FIRE PORT
HINGE
POWER INTERFACE
CHILLED IN
INSULATION
AMBIENT IN
LINE A (FROM WATER TANK)
LINE B (TO WATER TANK)
HEATER COILS 1 & 2
HOT WATER TANK
GSE TEST CONNECTOR FOR HEATER COIL FUNCTIONAL CHECK (A7J104)
HEATER COILS 3 & 4
EXPANSION CYLINDER
ECLSS BAY
CHILLED WATER LINE 45 TO 53° F
AMBIENT WATER LINE 70° F
WATER CHILLER
ARS H2O LOOPS
REPACKAGED GALLEY GENERAL LAYOUT
MIDDECK ACCOMODATIONS RACK(MAR)
REPACKAGED GALLEY
HOT WATER TANK
LOCKERS
FIRE PORT
.05 IN
1.0 IN
VIEW LOOKING DOWN
CIRCUIT BREAKER PANEL
MIDDECK UTILITY PANEL (MUP)
SIDE HATCH
VIEW LOOKING OUTBOARD
APPROXIMATE LOCATION OF REPACKAGED GALLEY ON MIDDECK PORT SIDE
FROM POTABLE H2O SUPPLY TANK A
GALLEY POT H2O SUPPLY POSITION
SUPPLY H2O
GALLEY SPLY VLV
GALLEY SUPPLY
OPEN
CLOSE
GALLEY FAN
GALLEY OVEN
GALLEY H2O HEATER
FOOD OVEN-ON
POTABLE HOT H2O HEATER-ON
POSITION (FACING GALLEY): LEFT SWITCH
POSITION (FACING GALLEY): RIGHT SWITCH
REHYDRATION STATION PACKAGE-IN-PLACE MICROSWITCH
HOT WATER
ROD/SLIDE ASSEMBLY
COLD WATER
RESISTANCE TEMPERATURE DETECTOR (RTD)
REHYDRATION STATION (SIDE VIEW)

BASIC REV E-4

DATE:	NAME:	VERSION:
DATE: 06/04/92	NAME: VEM	VERSION: BPT.C
DATE: 06/11/92	NAME: VEM	VERSION: INR.1
DATE: 11/23/92	NAME: VSH	VERSION: INR.2

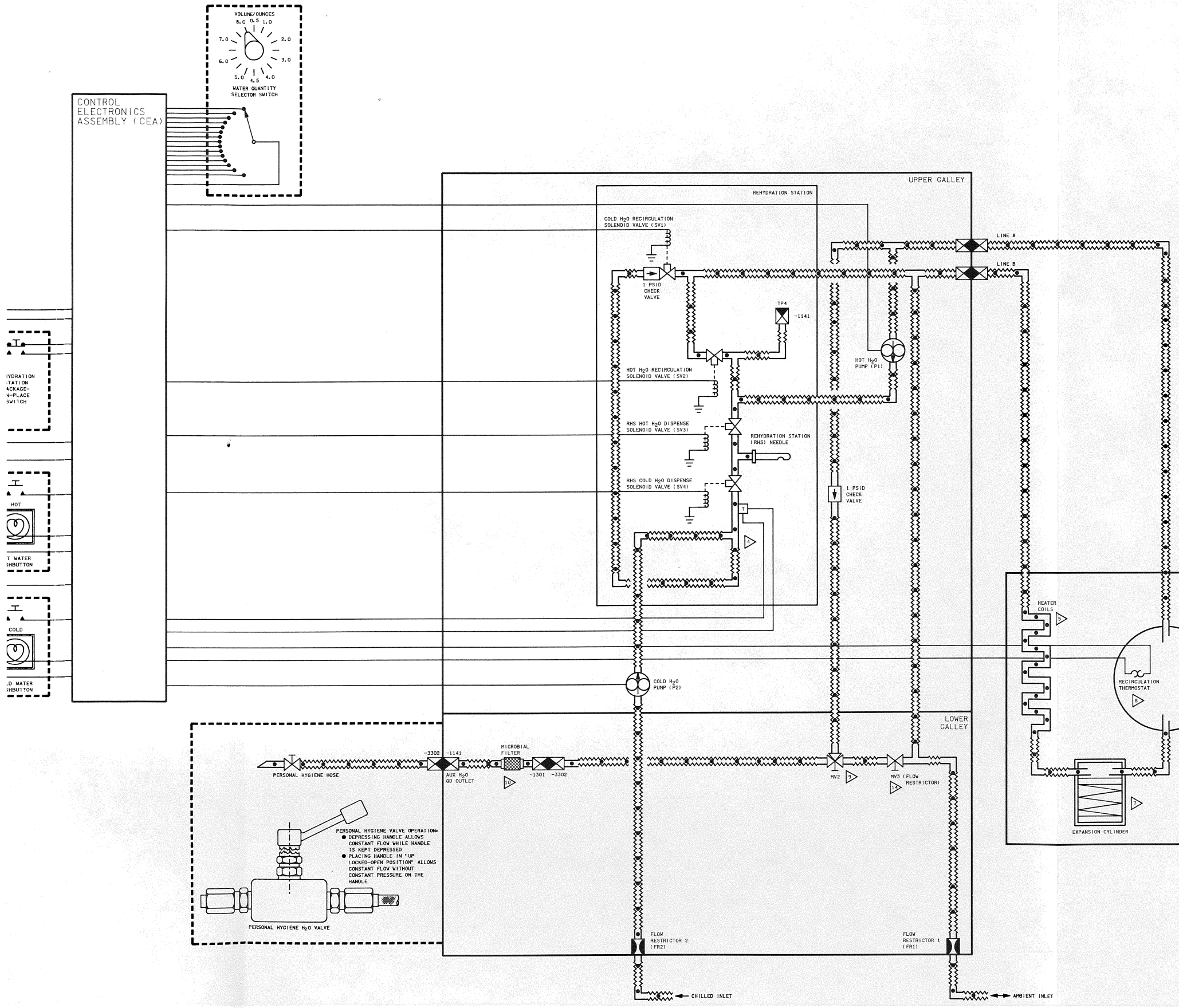

13 TWO FIRE PORTS EXIST ON THE REPACKAGED GALLEY - ONE JUST BELOW THE MV2 VALVE AND ONE ON THE LEFT CORNER OF THE TOP FACE (SEE DRAWING LOCATIONS T3 AND P8

12 THE TWO HINGES AND THE LATCH PIN ALLOW THE REPACKAGED GALLEY TO BE TILTED OUTWARD 45 DEGREES ON THE BOTTOM HINGES

11 TEST CONNECTORS ARE USED BY GROUND SUPPORT TO CHECK THE OPEN/CLOSE OPERATION OF HEATER THERMOSTATS

10 MICROBIAL FILTER: RESIN IMPREGNATED WITH TRIIODIDE (I_3) TO INHIBIT BACTERIAL GROWTH/REPRODUCTION. ALSO KNOWN AS THE MICROBIAL CHECK VALVE (MCV) BUT THIS IS A MISNOMER BECAUSE IT IS NOT A WATER CHECK VALVE

9 OPENING THE MV2 VALVE ALLOWS HOT WATER TO MIX WITH THE AMBIENT TEMPERATURE WATER BEING SUPPLIED TO THE AUX H_2O QD OUTLET (AUXILIARY PORT)

8 WHEN THE HOT WATER TEMPERATURE AT THE HOT WATER RECIRCULATION THERMOSTAT DROPS BELOW 145.35°F, THE CONTROL ELECTRONICS ASSEMBLY OPENS THE HOT H_2O RECIRCULATION SOLENOID VALVE (SV2) AND STARTS THE HOT H_2O PUMP (P1) TO RECIRCULATE HOT WATER . THE RECIRCULATION PATH RUNS FROM THE HOT WATER TANK THROUGH P1, SV2, AND THE HEATING COIL AND BACK TO THE HOT WATER TANK. WHEN THE RECIRCULATION THERMOSTAT TEMPERATURE REACHES 165.35°F, THE CEA STOPS THE RECIRCULATION PROCESS. TO KEEP THE WATER IN THE HOT WATER TANK HOT, IT MUST BE RECIRCULATED PERIODICALLY BECAUSE THE WATER IS HEATED IN THE LINE WHICH FEEDS THE TANK RATHER THAN IN THE TANK ITSELF

7 THE EXPANSION CYLINDER PROVIDES A VOLUME FOR HOT WATER EXPANSION FROM THE HOT WATER TANK IN THE EVENT THAT THE TANK IS OVERHEATED. THIS CYLINDER REPLACES THE FUNCTION OF THE OLD MV3 VALVE ON THE OLD GALLEY. PREVIOUSLY, IF THE WATER TANK WAS OVERHEATED WATER WOULD EXPAND AND FLOW BACK THROUGH THE AMBIENT INLET AND INTO THE SHDO SYSTEM. THE MAXIMUM VOLUME OF THE EXPANSION CYLINDER IS 7.5 CU. IN. OR ABOUT 1/2 A CUP

THE PREVIOUS VERSION OF THE GALLEY HAD AN MV4 VALVE THAT ALLOWED FOR BLEEDOUT OF AIR DURING GROUND SERVICING. THIS VALVE WHICH HAS BECOME OBSOLETE HAS BEEN REMOVED ON THE REPACKAGED GALLEY

6 WATER TANK CAPACITY IS 12 LBM. THE WATER TANK IS LOCATED OUTSIDE THE REPACKAGED GALLEY ON THE PORT SIDE. INSULATION ENCLOSES THE BOTTOM AND CIRCUMFERENCE OF THE WATER TANK/COIL ASSEMBLY. THE EXTERNAL DIMENSIONS OF THE WATER TANK ARE 12 INCHES IN DIAMETER AND 5.2 INCHES IN LENGTH

5 AMBIENT TEMPERATURE WATER ENTERS A HEATER COIL ASSEMBLY CONSISTING OF THREE 12.66 INCH DIAMTER COILS OF STAINLESS STEEL TUBING. EACH COIL HAS 2 STRIP HEATERS BONDED ON THE OUTSIDE OF THE TUBE SURFACE. A SMALL AIRSPACE EXISTS BETWEEN EACH COIL AND THE WATER TANK. HEATER COIL SETS EXTEND ABOUT 1/3 OF THE CIRCUMFERENCE OF THE TANK

4 WHEN THE COLD WATER TEMPERATURE SENSED BY THE RESISTANCE TEMPERATURE DETECTOR (RTD) EXCEEDS 60°F, THE CONTROL ELECTRONICS ASSEMBLY (CEA) OPENS THE COLD H_2O RECIRCULATION SOLENOID VALVE (SV1) AND STARTS THE COLD H_2O PUMP (P2) TO RECIRCULATE COLD WATER FOR A MINIMUM OF 10 SECONDS. IF, AFTER 10 SECONDS OF RECIRCULATION, THE TEMPERATURE AT THE RTD IS BELOW 55°F, THEN THE CEA WILL TERMINATE RECIRCULATION. THE RECIRCULATION PATH RUNS FROM THE WATER CHILLER THROUGH P2 AND SV1 AND RETURNS TO THE SUPPLY WATER SYSTEM THROUGH THE AMBIENT WATER INLET. IF THE WATER IN THE WATER CHILLER IS ABOVE THE RTD RESET POINT OF 55°F, DUE TO HIGHER THAN NORMAL ARS H_2O COOLANT LOOP TEMPERATURES FOR EXAMPLE, THE CEA WILL INHIBIT THE RECIRCULATION PROCESS AFTER 20 SECONDS. THE CEA RECIRCULATION INHIBIT LASTS FOR FIVE MINUTES, AFTER WHICH TIME THE CEA WILL REINITIATE RECIRCULATION IF AND WHEN THE RTD TEMPERATURE EXCEEDS 60°F. COLD WATER RECIRCULATION WAS IMPLEMENTED TO INSURE THAT THE COLDEST AVAILABLE WATER WAS IMMEDIATELY AVAILABLE AT THE REHYDRATION STATION. THIS TIMED COLD WATER RECIRCULATION PROCESS IS DESIGNED TO PREVENT CONTINUOUS COLD WATER RECIRCULATION IN THE EVENT THE WATER CHILLER TEMPERATURE IS ABOVE THE RESET POINT

3 DEPRESSION OF THE BLUE COLD WATER PUSHBUTTON ALLOWS DISPENSING OF COLD WATER FROM THE WATER CHILLER. THE BLUE COLD PUSHBUTTON WILL ILLUMINATE WHEN ACTUATED. WHEN SELECTED VOLUME OF WATER HAS BEEN DISPENSED, THE PUSHBUTTON WILL BEGIN TO FLASH ON AND OFF. THE LIGHT WILL EXTINGUISH WHEN THE REHYDRATION STATION (RHS) PACKAGE SWITCH IS OPENED BY RETRACTING THE FOOD/DRINK PACKAGE. THE SPECIFIC FUNCTIONS THAT OCCUR WHEN THE COLD PUSHBUTTON IS DEPRESSED ARE:

- THE CONTROL ELECTRONICS ASSEMBLY (CEA) OPENS COLD H_2O RECIRCULATION SOLENOID VALVE (SV1) AND STARTS COLD H_2O PUMP (P2). COLD WATER IS RECIRCULATED FOR THREE SECONDS TO PURGE THE LINE
- WHEN THREE SECONDS ARE UP, THE CEA CLOSES SV1 AND OPENS COLD H_2O DISPENSE SOLENOID VALVE (SV4) TO DISPENSE THE SELECTED QUANTITY
- WHEN DISPENSE OF THE SELECTED QUANTITY IS COMPLETE, THE CEA CLOSES SV4 AND STOPS PUMP P2. QUANTITY DISPENSED IS A FUNCTION OF TIME AND IS CONTROLLED BY A TIMER IN THE CEA

2 DEPRESSION OF THE YELLOW HOT WATER PUSHBUTTON ALLOWS DISPENSING OF HOT WATER FROM THE HOT WATER TANK. THE YELLOW HOT WATER PUSHBUTTON WILL ILLUMINATE WHEN ACTUATED. WHEN SELECTED VOLUME OF WATER HAS BEEN DISPENSED, THE PUSHBUTTON WILL BEGIN TO FLASH ON AND OFF. THE LIGHT WILL EXTINGUISH WHEN THE REHYDRATION STATION (RHS) PACKAGE SWITCH IS OPENED BY RETRACTING THE FOOD/DRINK PACKAGE. THE SPECIFIC FUNCTIONS THAT OCCUR WHEN THE HOT PUSHBUTTON IS DEPRESSED ARE:

- THE CONTROL ELECTRONICS ASSEMBLY (CEA) OPENS HOT H_2O RECIRCULATION SOLENOID VALVE (SV2) AND STARTS HOT H_2O PUMP (P1). HOT WATER IS RECIRCULATED FOR THREE SECONDS TO PURGE THE LINE
- WHEN THREE SECONDS ARE UP, THE CEA CLOSES SV2 AND OPENS THE RHS HOT H_2O DISPENSE SOLENOID VALVE (SV3) TO DISPENSE THE SELECTED QUANTITY
- WHEN DISPENSE OF THE SELECTED QUANTITY IS COMPLETE, THE CEA CLOSES SV3 AND STOPS PUMP P1. QUANTITY DISPENSED IS A FUNCTION OF TIME AND IS CONTROLLED BY A TIMER IN THE CEA

NOTES:

1 THE REHYDRATION STATION (RHS) PACKAGE SWITCH SERVES AS AN INTERLOCK SWITCH WHICH MUST BE CLOSED BEFORE THE RHS WATER DISPENSING SYSTEM WORKS. THIS IS ACHIEVED BY INSERTING AND PUSHING IN A FOOD/DRINK PACKAGE TO DEPRESS THE SWITCH TO THE CLOSED POSITION. ONCE WATER HAS BEEN DISPENSED, THE SWITCH MUST BE OPENED AND THEN CLOSED AGAIN BEFORE MORE WATER CAN BE DISPENSED. WHILE THE RHS PACKAGE SWITCH IS DEPRESSED, RECIRCULATION IS INHIBITED WITH ONE EXCEPTION. SWITCHING OVEN/RHS-ON, ACTIVATES AN INITIALIZATION PROCESS WHERE BOTH HOT AND COLD H_2O RECIRCULATE FOR 40 SECONDS, DURING WHICH TIME REHYDRATION STATION (RHS) DISPENSE IS INHIBITED. HAVING THE RHS PACKAGE SWITCH DEPRESSED WILL NOT INHIBIT THIS INITIALIZATION RECIRCULATION PROCESS

16 BOTH WATER HEATER SWITCHES MUST BE IN THE "ON" POSITION TO RECEIVE A TELEMETERED "POTABLE HOT H_2O HEATER - ON" INDICATION.

15 THE WATER HEATER SWITCHES AND THE OVEN/RHS SWITCH ARE SENSED CIRCUIT BREAKER TOGGLE SWITCHES. WHEN A TOGGLE IS IN AN "ON" POSITION AND CURRENT EXCEEDS 10 AMPS, THE BREAKERS WILL OPEN AND THE TOGGLE WILL MOVE TO THE "OFF" POSITION. IF ONE OF THESE CIRCUIT BREAKERS DETERIORATES AND OPENS WHILE THE TOGGLE IS IN THE "ON" POSITION, THE OTHER BREAKER WILL OPEN AND THE TOGGLE WILL GO TO THE "OFF" POSITION. NOTE: DURING NOMINAL OPERATIONS, A CLOSED SWITCH COULD BE AN INDICATION OF A CURRENT SPIKE

14 MV3 ON THE REPACKAGED GALLEY HAD A DIFFERENT LOCATION AND FUNCTION THAN THE OLD MV3 ON THE GALLEY. THE REPACKAGED GALLEY MV3 ACTS ONLY AS A FLOW RESTRICTOR TO THE AMBIENT FEED INTO MV2 AND IS ALWAYS OPEN. THIS VALVE IS INTERNAL TO THE REPACKAGED GALLEY

✳6 RPGD GLY

SIGNATURE		DATE	NATIONAL AERONAUTICS AND SPACE ADMINISTRATION LYNDON B. JOHNSON SPACE CENTER HOUSTON, TEXAS
DSGN	MICHAEL MURPHY	5/4/84	
DR	B. J. TEDDER JR.		REPACKAGED GALLEY
ENGR	P. J. WOODARD		
ENGR	P. J. Woodard	6/15/92	
APP	Schuyler Pyle	6/16/92	
APP			SPACE SHUTTLE
OMNIPLAN	J. F. Vinther	6-24-92	- ALL
LTR E	PCN 2		121 X 34

DWG NO 6.6
PAGE SHEET 1 OF 1

BASIC REV E-2

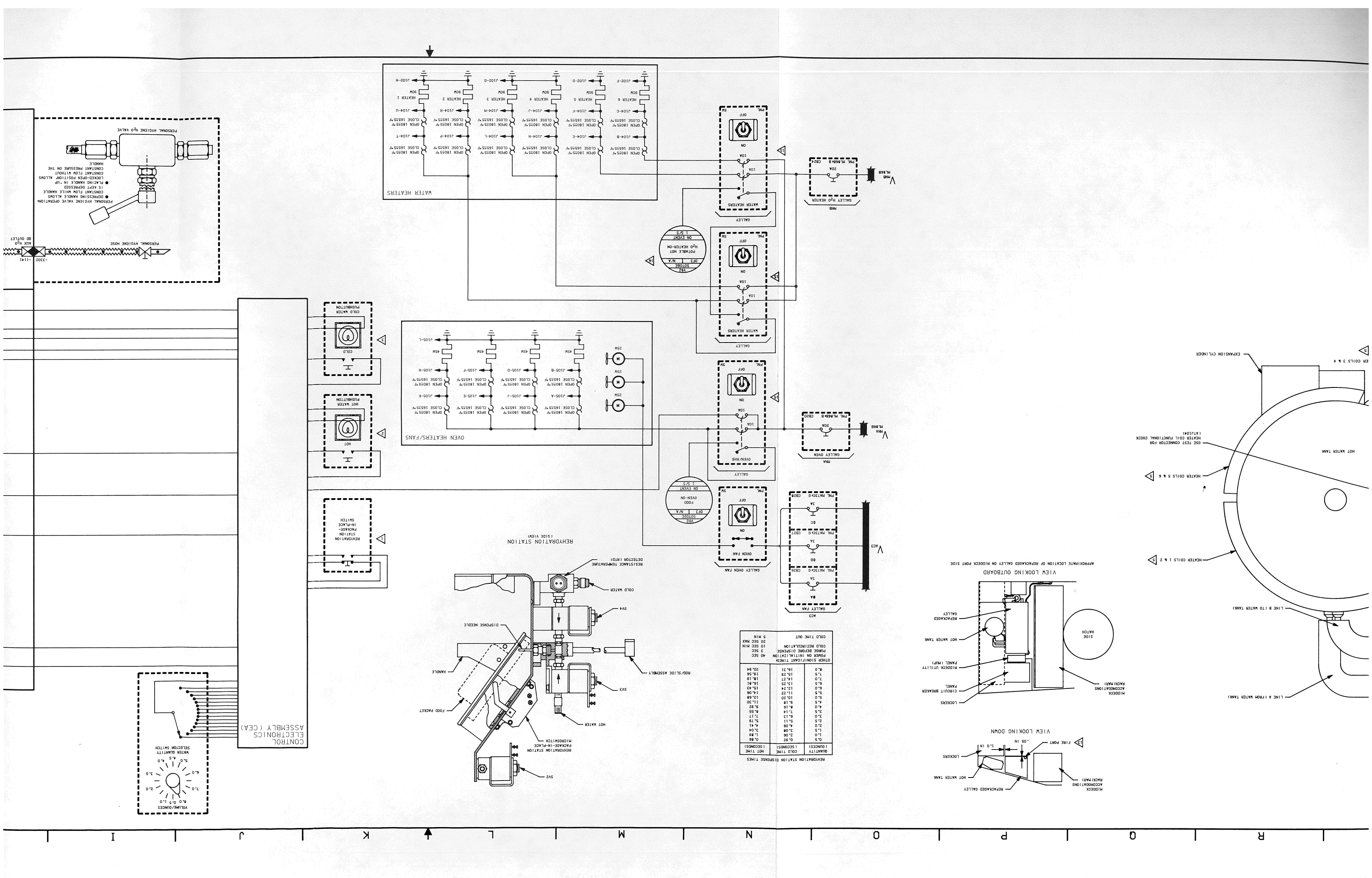

QUANTITY (OUNCES)	COLD TIME (SECONDS)	HOT TIME (SECONDS)
0.5	0.92	0.86
1.0	2.06	1.83
1.5	3.08	3.04
2.0	4.06	4.41
2.5	5.11	5.79
3.0	6.13	7.17
3.5	7.14	8.55
4.0	8.16	9.92
4.5	9.18	11.30
5.0	10.20	12.68
5.5	11.22	14.06
6.0	12.24	15.43
6.5	13.25	16.81
7.0	14.27	18.19
7.5	15.29	19.56
8.0	16.31	20.94

OTHER SIGNIFICANT TIMES	COLD TIME OUT
POWER ON INITIALIZATION	40 SEC
PUMP BEFORE DISPENSE	3 SEC
COLD RECIRCULATION	10 SEC MIN
	20 SEC MAX
	5 MIN

DATE: 11/23/92 | NAME: VSH | VERSION: INK 2

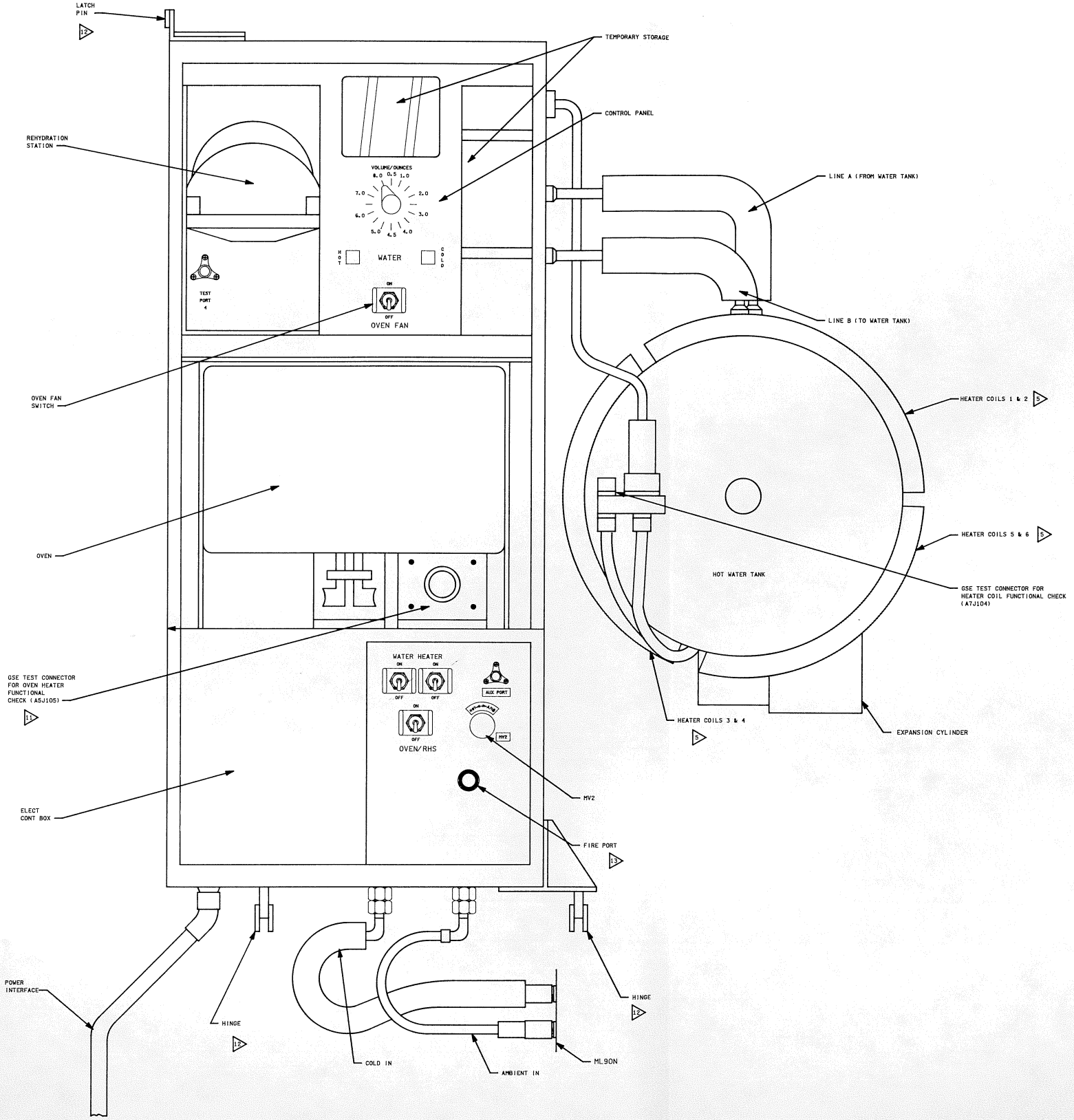

REPACKAGED GALLEY GENERAL LAYOUT

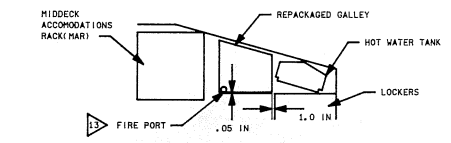

VIEW LOOKING DOWN

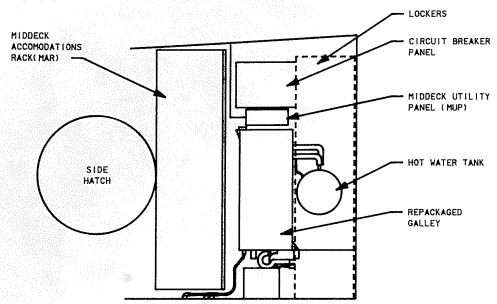

VIEW LOOKING OUTBOARD

APPROXIMATE LOCATION OF REPACKAGED GALLEY ON MIDDECK PORT SIDE

REHYDRATION STATION DISPENSE TIMES

QUANTITY (OUNCES)	COLD TIME (SECONDS)	HOT TIME (SECONDS)
0.5	0.92	0.86
1.0	2.06	1.89
1.5	3.08	3.04
2.0	4.06	4.41
2.5	5.11	5.79
3.0	6.13	7.17
3.5	7.14	8.55
4.0	8.16	9.92
4.5	9.18	11.30
5.0	10.20	12.68
5.5	11.22	14.06
6.0	12.24	15.43
6.5	13.25	16.81
7.0	14.27	18.19
7.5	15.29	19.56
8.0	16.31	20.94

OTHER SIGNIFICANT TIMES:	
POWER ON INITIALIZATION	40 SEC
PURGE BEFORE DISPENSE	3 SEC
COLD RECIRCULATION	10 SEC MIN 20 SEC MAX
COLD TIME OUT	5 MIN

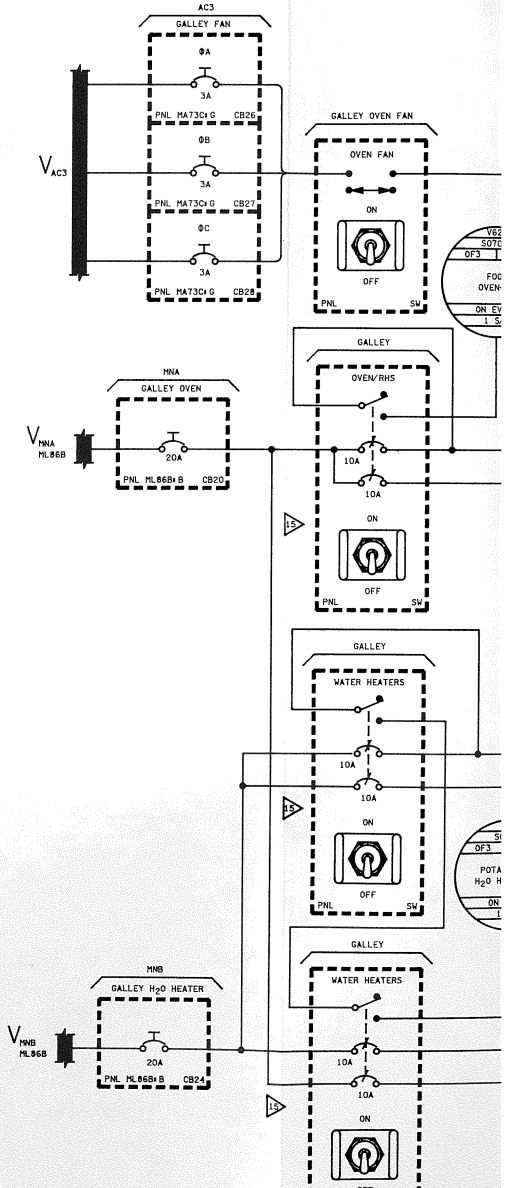

BASIC REV E-2

DATE: 7/25/87	NAME: CAR	VERSION: INK 2
DATE: 10/21/88	NAME: LAM	VERSION: INK 3
DATE: 8/18/90	NAME: VSH	VERSION: INK 4

1T2615A LP 1 H_2O AV BAY 1 HX OUT TEMP)

1T2616A LP 2 H_2O AV BAY 1 HX OUT TEMP)

1P2642A AV BAY 1 FAN ΔP)

1T2645A AV BAY 1 AIR OUT TEMP)

)1)

1T2618A LP 1 H_2O AV BAY 2 HX OUT TEMP)

1T2619A LP 2 H_2O AV BAY 2 HX OUT TEMP)

1P2647A AV BAY 2 FAN ΔP)

1T2650A AV BAY 2 AIR OUT TEMP)

)1)

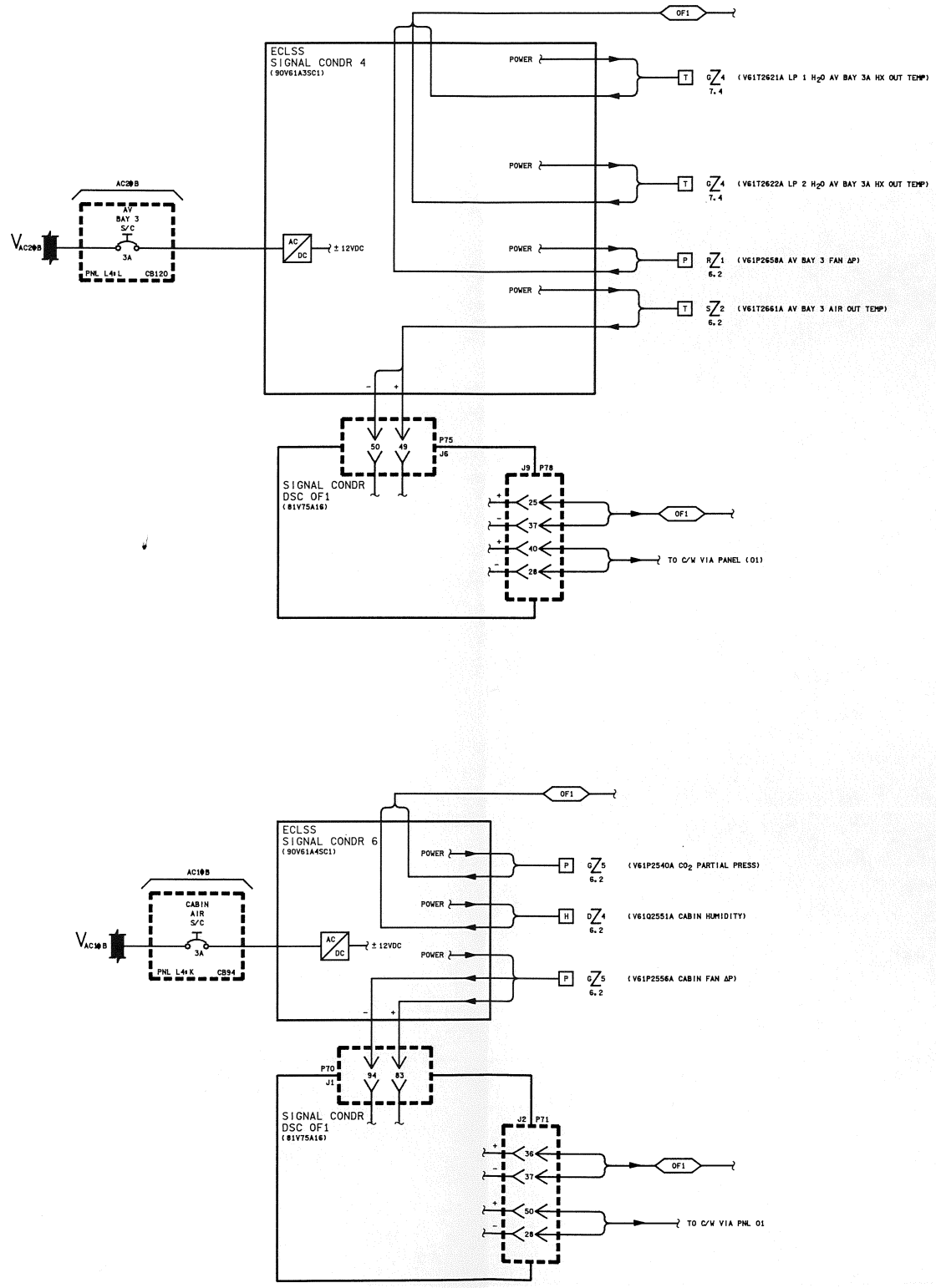

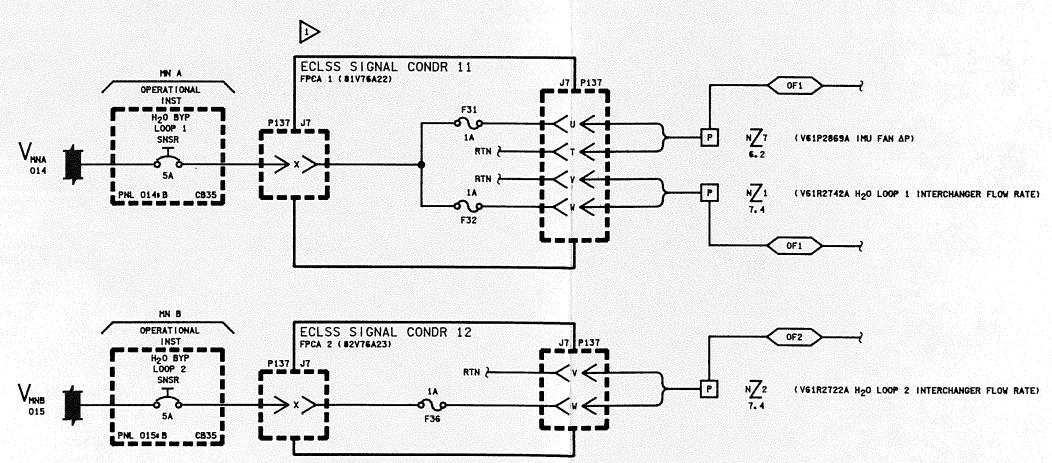

5. REFERENCE TABLE 6.1 FOR LISTING OF ROCKWELL INTERNATIONAL SCHEMATICS APPLICABLE TO THIS DRAWING

△1 THE PULSE/DC CONVERTER ACCEPTS FREQUENCY INPUTS WITH AMPLITUDES OF 0.2 TO 10.0 VAC FROM A PASSIVE ELECTROMAGNETIC SPEED PICKUP AND PROVIDES DISCRETE OUTPUTS. FOR THE FREQUENCY RANGE OF 550.0 ±7.5 Hz TO 645 ±15 Hz THE CONVERTER PROVIDES A 5.0 ±0.5 VDC OUTPUT SIGNAL. FOR FREQUENCIES OUTSIDE THIS RANGE THE CONVERTER OUTPUT IS 0 TO +0.5 VDC

△2 THE PULSE/DC CONVERTER ACCEPTS FREQUENCY INPUTS FROM THE SPEED SENSOR WITH A VOLTAGE OF 0.02 TO 10.0 VAC AND PROVIDES A 0.0 TO 5.0 VDC DISCRETE OUTPUT. THE OUTPUT IS 5.0 VDC FOR INPUTS BETWEEN 550 AND 635 Hz AND 0.0 VDC FOR ALL OTHER INPUT FREQUENCIES

△3 FREON SIGNAL CONDITIONER 1A NORMALLY POWERED BY AC2. FREON SIGNAL CONDITIONER 1B NORMALLY POWERED BY AC3

NOTES: △4 ECLSS SC 8,9,10 WERE DELETED WHEN DEVELOPMENTAL FLIGHT INSTRUMENTATION (OF1) WAS REMOVED AFTER OFT FLIGHTS. FPC 1,2 ARE GIVEN LABELS OF ECLSS SC 11,12 TO CORRESPOND TO PROCEDURES AND MALFUNCTIONS WHICH REFERENCE THEM. THEY ARE NOT TRUE SIGNAL CONDITIONERS

8 ECLSS

SIGNATURE		DATE	NATIONAL AERONAUTICS AND SPACE ADMINISTRATION LYNDON B. JOHNSON SPACE CENTER HOUSTON, TEXAS
DSGN	V. ORTIZ	3-7-78	
DR	M. GILLESPIE	2/24/87	ECLSS INSTRUMENTATION
ENGR	P. LANCZYK		
ENGR	[signature]	8/20/90	
APP	[signature]	8/20/90	
APP			SPACE SHUTTLE / DWG NO 6.8
OMNIPLAN	S.K. Kinkaid	11-27-90	ALL
LTR E	PCN		104.5 X 34 PAPER / SHEET 1 OF 1

BASIC REV E

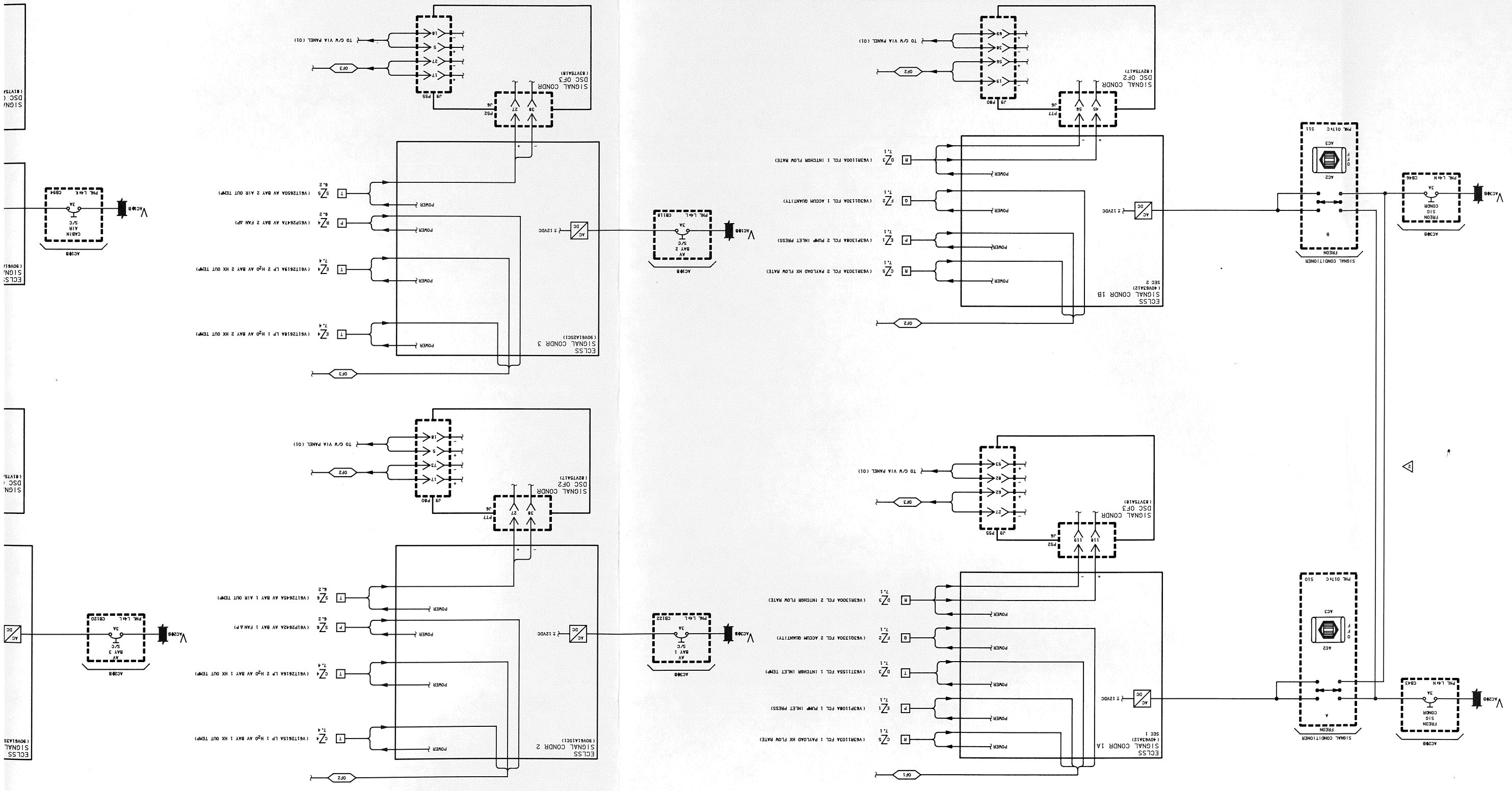

DATE: 8/16/90	NAME: VSH	VERSION: INX.4

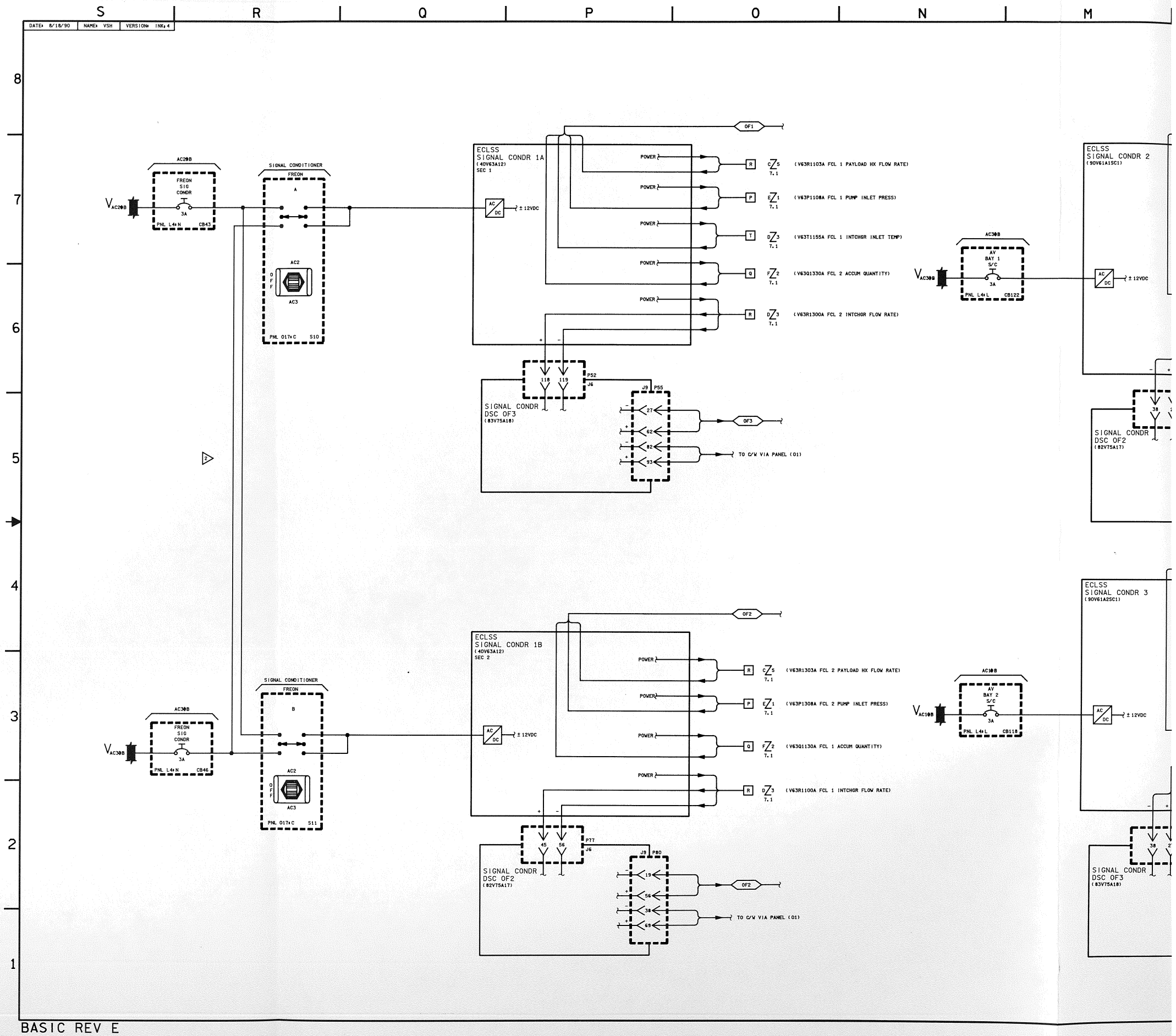

DATE: 8/18/90
NAME: VSH
VERSION: INK, 4
ECLSS SIGNAL CONDR 1A (40V63A12) SEC 1
ECLSS SIGNAL CONDR 1B (40V63A12) SEC 2
ECLSS SIGNAL CONDR 2 (90V61A1SC1)
ECLSS SIGNAL CONDR 3 (90V61A2SC1)
SIGNAL CONDITIONER
SIGNAL CONDR DSC OF3 (83V75A18)
SIGNAL CONDR DSC OF2 (82V75A17)
SIGNAL CONDR DSC OF2 (82V75A17)
SIGNAL CONDR DSC OF3 (83V75A18)
(V63R1103A FCL 1 PAYLOAD HX FLOW RATE)
(V63P1108A FCL 1 PUMP INLET PRESS)
(V63T1155A FCL 1 INTCHGR INLET TEMP)
(V63Q1330A FCL 2 ACCUM QUANTITY)
(V63R1300A FCL 2 INTCHGR FLOW RATE)
(V63R1303A FCL 2 PAYLOAD HX FLOW RATE)
(V63P1308A FCL 2 PUMP INLET PRESS)
(V63Q1130A FCL 1 ACCUM QUANTITY)
(V63R1100A FCL 1 INTCHGR FLOW RATE)
TO C/W VIA PANEL (01)
POWER
± 12VDC

BASIC REV E

DATE: 04/21/96	NAME: BJB	VERSION# BPT: 42
DATE: 05/22/96	NAME: MDU	VERSION# BPT: 43
DATE: 06/11/96	NAME: BJB	VERSION# INR: 10

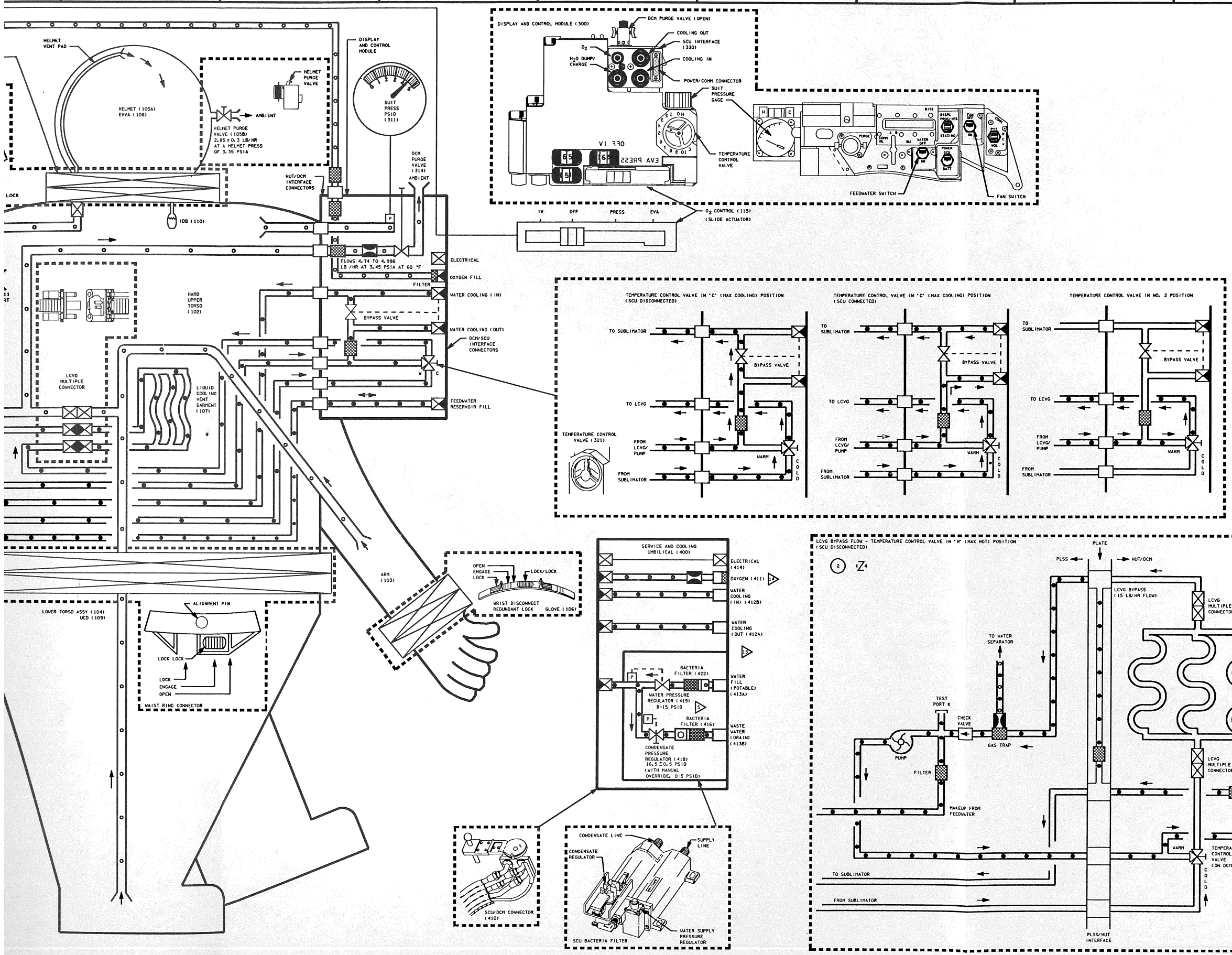

△1 ITEM 120A - FLOW 83-145 SCCH DRY O_2 W/T11 AT 4.3 ± 0.1 PSIA, TP F AT 15.15 ± 0.55 PSIA

△2 SOLENOID VALVE SHARES A SINGLE COIL FOR BOTH OPEN AND CLOSE COMMANDS, FOR LOSS OF EMU POWER, VALVES REMAIN IN LAST COMMANDED POSITION

△3 VALVE HAS BEEN FUNCTIONALLY REPLACED BY SCOF. VALVE ACTIVATION HAS BEEN OBSERVED AT V1103

△4 APPROXIMATELY 1 TO 10% OF VENT FLOW ACCOMPANIES CONDENSATE

△5 VALUES GIVEN ARE AT 3.35 PSIA, 5.4 ACFM MAX AT 4.3 PSIA

△6 SOP PRESSURE SENSOR MAY BE AFFECTED BY EMI

△7 SCU WATER (COOLING IN, COOLING OUT, FEEDWATER) LINES MAX OPERATING PRESSURE 40 PSIA, PROOF 60 PSIA, BURST 80 PSIA

△8 SCU O_2 LINE MAX OPERATING PRESSURE 1050 PSIA, PROOF 1575 PSIA, BURST 2100 PSIA

△9 TEST PORT F BTA ORIFICE CAP IS REMOVED FOR BTA OPERATIONS. FLOW THROUGH TEST PORT F TRIGGERS OPENING OF LOW MODE RELIEF VALVE (120)

△10 BTA IS INSTALLED ON POSITIVE PRESSURE RELIEF VALVE (PPRV) TO ALLOW SPACE SUIT ASSEMBLY TO BE PRESSURIZED UP TO 8.45 PSID FOR BENDS TREATMENT. POPPET KEEPER SCREW IS INSTALLED ON PPRV TO OVERRIDE THE RELIEF VALVE BEFORE BTA IS INSTALLED. POPPET KEEPER SCREW IS STOWED ON BTA HOUSING. IF POPPET KEEPER SCREW NOT INSTALLED, BTA RELIEF VALVE AND ITEM 146 BECOME ADDITIVE

△11 SOP INTERSTAGE GAGE IS USED TO VERIFY NOMINAL PERFORMANCE OF FIRST STAGE REGULATOR

△12 SCOF PRESSURE RELIEF VALVE FUNCTIONALLY REPLACES SOP CHECKOUT PACKAGE RELIEF VALVE (1145). 145 IS CURRENTLY UNRELIABLE DUE TO CORROSION PROBLEMS

△13 SOP CHECKOUT FIXTURE (SCOF) IS INSTALLED ON HELMET ATTACHING RING (VENT DUCT) TO SEAL OFF VENTILATION CIRCUIT FOR SOP CHECKOUT

△A REFER TO TABLE 6.1 FOR DRAWING TRACEABILITY

△B NOMINAL FILL TIME FOR PRIMARY O2 TANKS IS 15 MINUTES

△C NOMINAL FILL AND DRAIN TIMES FOR FEEDWATER TANKS (PRIMARY 1 & 2 AND RESERVE) ARE 15 MINUTES

△D 12 PSID, NOMINAL

△E PUMP PRIMING VALVE OPENS WHEN H2O SEPARATOR DEVELOPS 2-5 PSI HEAD OR WHEN MANUAL OVERRIDE ON BACK OF PLSS IS PRESSED

△F SOP PRESSURE REGULATED TO:
3.40-3.90 PSID AT 0.00-1.00 LB/HR
3.33-3.90 PSID AT 1.01-4.50 LB/HR
3.33-3.62 PSID AT 4.51-5.26 LB/HR
OVER AMBIENT

2. DELETED

NOTES: △ COOLANT ISOLATION VALVE OPEN WITH FAN SWITCH

*9 EMU INTRG SYS SCH

SIGNATURE		DATE	NATIONAL AERONAUTICS AND SPACE ADMINISTRATION LYNDON B. JOHNSON SPACE CENTER HOUSTON, TEXAS	
DSGN N. SABBAN		2-6-80		
DR JOAN F. KRANZ		8/4/83		
ENGR S. RAINWATER			EMU INTEGRATED SYSTEM SCHEMATIC	
ENGR				
APP				
APP			SPACE SHUTTLE	DWG NO 6.9
CADS J.K. Kimbell		6-14-96	ALL	
LTR E	PCN 6		126.5 X 34	PAGE SHEET 1 OF 1

BASIC REV E-6

PRIMARY LIFE SUPPORT SUBSYSTEM (100)

SECONDARY OXYGEN PACK (SOP) (200)

T S R Q P O N M L K J

DATE: 06/11/96 | NAME: BJB | VERSION: INK-10

W V U T S R Q P O N

8 7 6 5 4 3 2 1

PRIMARY LIFE SUPPORT SUBSYSTEM (100)

SECONDARY OXYGEN PACK (SOP) (200)

SECONDARY OXYGEN TANKS (210)
0 TO 6800 PSIA
80° TO -180°F
2.631 LBS AT 5800 PSIA AND 80°F (FOR TWO BOTTLES)
MAX OPERATING PRESSURE=7400 PSIA
NORMAL OPERATING PRESSURE=6000 ± 200 PSIA
VOLUME PER BOTTLE=89.2 IN³ (MIN)
PROOF PRESSURE=11,100 PSID
BURST PRESSURE=14,800 PSID

PRIMARY OXYGEN TANKS (111)
60 TO 950 PSI AT 60 TO 90°F
1.217 LBS USABLE AT 850 PSIA AND 90°F (FOR TWO BOTTLES)
DISCHARGE TO 60 PSI AND 60°F NOMINAL
STORAGE 900 ± 50 PSIA
MAX OPERATING PRESSURE=1050 PSIA
NORMAL OPERATING PRESSURE=900 ± 50 PSIA
VOLUME PER BOTTLE=240 IN³ (MIN)
PROOF PRESSURE=1575 PSIA
BURST PRESSURE=2100 PSIA (MIN)

O_2 FILL CONNECTOR (213F)

SOP PRESSURE SENSOR (215) (TO C&W)
0 TO 7400 PSIA
ERROR BAND= ±259 PSI

SOP PRESSURE GAGE (213E)
PRESSURE RANGE: 0 TO 8000 PSI
ERROR BAND= ±400 PSI

200 PSI

FIRST STAGE REGULATOR (213B)

TEST PORT D INTERSTAGE PRESS

INTERSTAGE GAGE (213G)
PRESSURE RANGE= 0 TO 8000 PSI
ERROR BAND= ±400 PSI

SOP MANUAL OVERRIDE (ITEM 213)
ACTUATION LEVER
SECOND STAGE ITEM 213D

COMBINATION SECOND STAGE REGULATOR, FLOW RESTRICTOR, AND OXYGEN SHUTOFF VALVE (213D), FLOWS 7.49 LB/HR MAX

PLSS/SOP INTERFACE CONNECTOR

SOP CHECKOUT FIXTURE (SCOF)
RELIEF VALVE (495)
7.49 LB/HR (MIN)
DRY O_2 AT 4.7 TO 5.5 PSIA AND 10.2 PSIA
NORMAL OPERATING PRESSURE AT 5.5 PSID
PROOF PRESSURE AT 8.25 PS
BURST PRESSURE AT 11.0 PS
CRACKING/RESEAT AT 4.7 PS

PRIMARY O_2 SOURCE PRESS SENSOR (112) (TO C&W)
PRESSURE RANGE: 0 TO 1100 PSIA
ERROR BAND= ±2.5% FS OR 27.5 PSI

CHECK VALVE (113A)

FLOW RESTRICTOR (113B)
7.49 LB/HR MAX AT 1050 PSIA
5.5 TO 7.1 LB/HR AT 900 ±50 PSIA

OXYGEN SHUTOFF VALVE (113C)

SUIT PRESSURE REGULATOR (113D)
SUIT PRESSURE REGULATED TO:
4.3 ± 0.1 PSID (EVA AND PRESS)
0.9 ± 0.5 PSID (IV)

WATER PRESSURE REGULATOR (113E)
15.15 ± 0.55 PSIG

LOW MODE OPENS WHEN P2-P1 ≥1 PSI

DUAL MODE RELIEF VALVE (120B)

P AMBIENT

HIGH MODE CRACKING AT 16.25 TO 17.8 PSID RESEAT AT 16.25 PSID

ORIFICE (120A)

TEST PORT G

CHECK VALVE (120C)

TEST PORT F (BTA ORIFICE AND ORIFICE CAP)

TEST PORT F
3/8-IN. HEX BTA ORIFICE CAP
SOP MANUAL OVERRIDE
INTERSTAGE GAGE
TP-G
TP-D
TP-E
SOP PRESSURE GAGE
SOP

BENDS TREATMENT ADAPTER (BTA)
BTA PRESSURE RELIEF VALVE (491)
0.05 - 7.57 LB/HR
DRY O_2 AT 8.04 - 8.45 PSID AND 14.7 PSIA
RESEAT 7.8 PSID MIN
POSITIVE PRESSURE RELIEF VALVE
OPEN
AMBIENT
NEGATIVE PRESSURE RELIEF VALVE
BTA GAGE
LOCK
POPPET KEEPER SCREW STOWED

RESERVE WATER TANK (148)
0.9 LBS OF WATER

PRIMARY WATER TANK NO 1 (131)

PRIMARY WATER TANKS 9.3 LBS OF WATER

PRIMARY WATER TANK NO 2 (162)

O_2 FEEDWATER SUPPLY PRESSURE SENSOR (132A) (TO C&W)
PRESSURE RANGE: 0 TO 40 PSI
ERROR BAND= ±1 PSIA

H_2O FEEDWATER SUPPLY PRESSURE SENSOR (132B) (TO C&W)
PRESSURE RANGE: 0 TO 40 PSI
ERROR BAND= ±1 PSIA

TEST PORT L
TEST PORT C
TEST PORT J
TEST PORT B

RELIEF VALVE (142)
RELIEF AT 4.0 PSID (MIN)
RESEAT AT 3.0 PSID

CHECK VALVE (143)

RELIEF AT 1.0 PSID (MAX)
RESEAT AT 0.5 PSID (MIN)

AMBIENT

FEEDWATER RELIEF VALVE (135)
CRACKING/RESEAT AT 19 PSID ± 1.0 PSID

RELIEF VALVE (172)
CRACKING AT 0.3 PSID (MIN)
RESEAT AT 0.1 PSID (MIN)

OXYGEN VENTILATION CIRCUIT

CONDENSATE WATER RELIEF VALVE (134)
RELIEF AND RESEAT 2.25-3.7 PSID

TEST PORT B

VENT FLOW SENSOR/ BACK FLOW CHECK VALVE (121) (TO C&W)
DEACT 0-3.7 ACFM
ACT 3.7-5.7 ACFM

WATER SEPARATOR (123B)

FEEDWATER PRESSURE SENSOR (138) (TO C&W)
PRESSURE RANGE: 0 TO 16 PSIA
ERROR BAND= ±0.4 PSI

SLURPER

WATER OFF / ON

FEEDWATER SHUTOFF VALVE (137)

SUBLIMATOR (140)
UA=120 BTU/HR °F (MIN)

FAN (123A)
FLOWS 6.72 ACFM IN
6.50 ACFM IN PRESS

SUBLIMATOR OUTLET TEMP (139) (TO C&W)
TEMPERATURE OPERATING RANGE: 32 TO 104°F

STEAM TO VACUUM

TEST PORT E

FEEDWATER PRESSURE REGULATOR (136)
2.05-4.15 PSID

EVA - 16.3 ± 0.0
2.6 AMPS
PRESS - 16.0 ± 0
4.5 AM

MOTOR (123D)
18-20 KRPM

TEST PORT H

MAGNETIC COUPLING

PUMP (123C)
240 LB/HR MIN.

FILTER (127)

MAKE UP FROM FEEDWATER

COOLANT ISOLATION VALVE (171)

FAN OFF / ON

BASIC REV E-6

DATE: 12/15/92	NAME: LAM	VERSION: BPT: 21
DATE: 12/23/92	NAME: VEM	VERSION: BPT: 22
DATE: 12-29-92	NAME: SKK	VERSION: INK: 6

DCM | BACKPACK

EXG CIRCUIT

(440) EEN

MUT PLSS INTERFACE

EVC 16.9-2

REAL TIME DATA SYSTEM (174)

RELAY AND CONTROL CKT | 2.4576 MHz | SYS CLK | CPU | DC/DC CONVERTER | +5V | MMULO | SYSTEM VOLTAGE | OBS SIGNALS | RELAY SWITCH | SERIAL DATA | ADDR LATCH | RAM | P2OM | UART | BUFFER | S/D | OPTO ISOL | ECHO S/D | LOW PASS FILTER | OPTO ISOL

CCA

DC VOLT REGULATOR | IN +V ADJ | 732K | 3.57K | 4.99K | 3.57K | AMPLIFIER STAGE | $+V_{REG}$ | SUMMING NETWORK STAGE | RIGHT MIC BOOM | 510 | 380 | 380 | 510 | 380 | 380 | DC ISOL TRANS | 604 | 604 | 604 | 604 | TO EVC 16.9-2 | FROM LEFT MIC BOOM | FROM EVC 16.9-2 | EARPHONES

CAUTION AND WARNING SYSTEM (150)

REVERSE PROTECT/ COND CKT | RESET CKT | CPU | 2.4576 MHz | SYSTEM CLOCK | I/O PORT | +5.0V | MEMORY | 12 BITS | BITE CKT | WARNING TONE | THRUSTER CUE AND STATUS TONES | I/O PORT | UART | UART CLK | SQUARE AND COND | DIFFER ISOLATION AMPS ≥10MΩ | MUX | FILTERS | FILTERS | +12.1V | V REF | A/D AND BUFFERS | 3 SPARE CHANNELS | ±12.1V | COND CKT | +12.1V | -12.1V | VOLTAGE DIVIDERS | +5V

+18V | REVERSE PROTECT AND ΔV DIODES | +5V | +12.1V | -12.1V | SYSTEM VOLTAGES

TONE INTERFACE 16.9-2

BATTERY +17V (490) | BAT VOLT SENSE (+) | BAT VOLT SENSE (-) | BAT VOLT SENSE CKT | BAT RETURN | 16.67 MΩ CURRENT SENSE RESISTOR | BAT CURRENT SENSE CKT

COOLANT ISOLATION VLV (171) | NC | OPEN

FEEDWATER SHUTOFF VLV (137) | NC | OPEN

FAN (WINDINGS) POWER | FAN ELECTRONICS POWER | TO FAN MOTOR LOGIC CIRCUITS

TACH OUTPUT

MOTOR (1230) | SPEED CONTROL | RAMP GENERATOR | PEAK DETECTOR | STALL | I=UNDERSPEED | SPD CNTL | I=OVERSPEED | I=SHUTDOWN | FAN RESTART (5 SEC) | ENABLE | DECODER | NO 1 | NO 2 | NO 3 | NO 4 | HALL SENSOR #1 | STATOR (WINDINGS AT 90°) | ROTOR (PERMANENT MAGNETS) | WINDINGS | HALL SENSOR #2 | PRE-AMP | COMP | BIAS ADJUST | PRE-AMP | COMP | BIAS ADJUST | MOTOR ASSEMBLY

DRIVE CIRCUIT 4 | DRIVE CIRCUIT 3 | DRIVE CIRCUIT 2 | DRIVE CIRCUIT 1

+5 | SUIT PRESS (114)

+5 | PRIMARY O_2 PRESS (112)

+5 | FEEDWATER PRESS (138)

SUBLIMATOR OUTLET TEMP (139)

+5 | FEEDWATER SUPPLY PRESS H_2O O_2 (132)

SOP

±12.1 | SOP PRESS (215)

-12.1 | EVA POSITION (116)

-12.1 | VENT FLOW SENSOR (121)

±12.1 | $PPCO_2$ TRANSDUCER (122)

13. THE WIRING HARNESS CONNECTIVITY DRAWING SHOWS THE ROUGH PHYSICAL LAYOUT OF THE WIRING BUNDLES IN THE EMU AND THE COMPONENTS TO WHICH THEY CONNECT

WIRING HARNESS LINE LEGEND

151 HARNESS — · — · — · —

152 HARNESS – – – – – –

153 HARNESS — — — — —

156 HARNESS ————

FRONT MOUNTED

(12) BOTH MICROPHONES AND BOTH EARPHONES HAVE REDUNDANT TRANSDUCER ELEMENTS. FAILURE OF ONE MICROPHONE AND/OR ONE EARPHONE STILL PERMITS FULL COMMUNICATION

11. REFER TO TABLE 6-I FOR DRAWING REFERENCE

(10) LEFT MIC BOOM CIRCUITRY IS IDENTICAL TO RIGHT MIC BOOM

(9) RTDS DATA TRANSMISSION AS FOLLOWS: 101 SEC OF EXG DATA FOLLOWED BY 4 SEC OF LOGIC DEADBAND, FOLLOWED BY 15 SEC OF SERIAL DATA AT 50 BAUD

(8) SPEED CONTROL IS ENABLED IF FAN RPM EXCEEDS 19,300 ±300.

(7) UNDERSPEED BIT IS SET WHEN FAN RPM DROPS BELOW 13,500.

(6) RATED AT 26.6 AMP-HR, MINIMUM NOMINAL VOLTAGE 16.8 VDC WITH FAN RUNNING. NOMINAL EMU CURRENT 2.6 TO 4.2 AMPS AT VACUUM.

(5) BOTH VALVES ARE IDENTICAL. CLOSE COMMAND ENERGIZES COIL FOR 51 MSEC AND LATCHES VALVE TO THE CLOSED POSITION. OPEN COMMAND ENERGIZES COIL FOR 66 MSEC AND LATCHES VALVE TO THE OPEN POSITION.

(4) WINDINGS ARE PHYSICALLY LOCATED IN THE MOTOR ASSEMBLY. THEY ARE REPRESENTED HERE TO SHOW THEIR INTERFACE WITH THE DRIVE CIRCUITS.

(3) RAMP GENERATOR AND PEAK DETECTOR CONSTITUTE THE SQUARE WAVE TO DC CONVERSION UNIT.

(2) AT STARTUP OUTPUT=1 FOR 5 SEC, OUTPUT=0 THEREAFTER.

NOTES: 1. -14.2V SUPPLY COMES FROM DC/DC CONVERTER

10 EMU ELEC SCHEM

SIGNATURE	DATE	NATIONAL AERONAUTICS AND SPACE ADMINISTRATION LYNDON B. JOHNSON SPACE CENTER HOUSTON, TEXAS
DSGN		
DR		
ENGR J. DUTTON		EMU ELECTRICAL SCHEMATIC
ENGR	12-30-92	
APP	12/30/92	
APP	12/30/92	SPACE SHUTTLE — DWG NO. 6.10
OMNIPLAN S.K. Kimbrell	1-12-93	ALL — PAGE — SHEET 1 OF 1
LTR E — PCN 2		126.5 X 34

BASIC REV E-2

T S R Q P O N M L K J

WIRING HARNESS CONNECTIVITY

DCM

DCM BACKPACK

PLSS (BACK VIEW)

RTDS 174

P38

PPCO$_2$ 122

P7

FAN/PUMP/ WATER SEPARATER MOTOR 123

COOLANT ISOLATION VALVE 171

P33

J10A

P10

P10 J10

EMU ELECTRICAL HARNESS 440

CCA

HUT (BACK VIEW)

P27

P28

EVA CABLE 13540

BIOMED SIGNAL ECG CONDITIONER

152 HARNESS

151 HARNESS

MOTOR DATA

P35

DCM ELECTRONICS MODULE 385 (FRONT VIEW)

J1 → TO SCU

J37 P37

O_2 ACT ASSY

J4 P4

J3 P3

SHEAR PLATE 115

MECHANICAL CABLE

SOP (BACK VIEW)

DISPLAY AND CONTROL MODULE (300)

DCM PURGE VALVE (OPEN)

SCU INTERFACE (330)

PRESSURE GAGE LIGHT

SCU CONNECTOR (J1)

DISPLAY SWITCH

FAN SWITCH

COMM SWITCH

SUIT PRESSURE GAGE

TEMPERATURE CONTROL VALVE

FRONT VIEW

TOP VIEW (WEARING DCM)

DISPLAY SWITCH

FEEDWATER SWITCH

POWER SWITCH

FAN SWITCH

O_2 ACTUATOR

PRESS

OFF

-14.2V

DISPLAY PROC/YES

STAT/NO

DISPLAY SW (368)

-14.2V

VEHICLE PWR SENSE

BATT VOLT SENSE

DISCRETE INTERFACE

FAN ON

FEEDWATER OPEN

BITE LCD (363)

+12V

+3.8V

DISPLAY INTERFACE

+5

CLOCK

LCD DISPLAY (369)

-21V

DISPLAY INTENSITY (361)

PRESSURE GAGE LIGHT

DC/DC CONVERTERS AND REGULATORS

+5.6V

+18V

+14.2V

-14.2V

TONE INTERFACE

16.9-2

BATTERY +17V (490)

BAT VOLT SEN

BAT VOLT SEN

BAT RETURN

16.67 MΩ CURR SENSE RESIST

25 SUIT PWR RTN -

12 SUIT PWR SENSE + (VEHICLE PWR)

13 +18.5VDC

16 BATT SENSE

11 BATT CHARGING VOLT

5

6

7

8

9

1 HARDLINE AUDIO IN LO

3 HARDLINE AUDIO IN HI

22 HARDLINE AUDIO OUT LO

20 HARDLINE AUDIO OUT HI

18 HARDLINE KEY RTN

2 HARDLINE KEY

14 SENSE RTN

J1 SCU CONNECTOR

EMI FILTER

CAM MICRO SW

SCU

G1

G2

T4 T6 T5 FAN & ELECTRONICS PWR

T7 T9 BATT + 17V

T8 T1 T3 EVC AND VLV PWR

T2

POWER SCU

BATT

POWER SW (364)

BATT + 17V

CB 1.4 ±.6A

EVC PRIMARY

CB 1.65 ±.2A

COMM HL A B BU

EVC MODE SW (362)

CLIV

EVC SECONDARY

CB 2.05 ±.2A

CB

FAN OFF ON

FAN SW (366)

CB .7 ±.2A

WATER OFF ON

WATER SW (367)

FROM EVC RCV

PTT VOX R C V

PTT SW (365)

G 6 16.9-2

3 16.9-2

8 16.9-2

6 16.9-2

EVC

OFF

VI 370 223B9 AV3

EVA PRESS

O2 PURGE

COMM

WATER SEP

POWER

STAT/NO

PROC/YES

BITE

FAN

VOX

DATE: 12-29-92 | NAME: SKK | VERSION: INK=6

W V U T S R Q P O N

8 7 6 5 4 3 2 1

WIRING HARNESS CONNECTIVITY

156 HARNESS

152 HARNESS

PLSS (BACK VIEW)

CWS 150

EVC

H_2O FEEDWATER SUPPLY PRESS 132B

SUIT PRESSURE 114

RTDS 174

$PPCO_2$ 122

O_2 FEEDWATER SUPPLY PRESS 132A

FAN/PUMP/ WATER SEPARATOR MOTOR 123

COOLANT ISOLATION VALVE 171

FEEDWATER SHUTOFF VALVE 137

SERIAL DATA PORT

VENT FLOW 121

FEEDWATER PRESS 138

SUBLIMATOR OUTLET TEMP 139

BATTERY 490

PRIMARY O2 PRESSURE 112

EVA POSITION MICROSWITCH 116

SHEAR PLATE 115

P10 J10 EMU ELECTRICAL HARNESS 440

CCA HUT (BACK VIEW)

P27 P28 EVA CABLE 13540

BIOMED SIGNAL ECG CONDITIONER

J10A P10

MOTOR DATA P35

DCM ELECTRONICS MODULE 385 (FRONT VIEW)

J1 TO SCU

J37 P37 O_2 ACT ASSY

J4 P4 J3 P3

152 HARNESS

151 HARNESS

153 HARNESS

MECHANICAL CABLE

SOP (BACK VIEW)

SOP PRESSURE 215

DCM

DISPLAY AND CONTROL MODULE (300)

DCM PURGE VALVE (OPEN)

SCU INTERFACE (330)

DISPLAY SWITCH

PRESSURE GAGE LIGHT

FAN SWITCH

SCU CONNECTOR (J1)

COMM SWITCH

SUIT PRESSURE GAGE

TEMPERATURE CONTROL VALVE

FRONT VIEW

DISPLAY PROC/YES

STAT/NO

DISPLAY SW (368)

-14.2V

25	SUIT PWR RTN -
12	SUIT PWR SENSE + (VEHICLE PWR)
13	+18.5VDC
16	BATT SENSE
11	BATT CHARGING VOLT
5	
6	G1
7	
8	
9	G2
1	HARDLINE AUDIO IN LO
3	HARDLINE AUDIO IN HI
22	HARDLINE AUDIO OUT LO
20	HARDLINE AUDIO OUT HI
18	HARDLINE KEY RTN
2	HARDLINE KEY
14	SENSE RTN

J1 SCU CONNECTOR

EMI FILTER

CAM MICRO SW

SCU

EVC PRIMARY

EVC SECONDARY

CB 1.65 1.24

COMM HL A B BU

EVC MODE SW (362)

K3 16.9-2

G6 16.9-2 FROM EVC RCV

PTT RCV VOX

PTT SW (365)

BASIC REV E-2

DATE: 4/12/88	NAME: MAG	VERSION: INK 4
DATE: 9/13/90	NAME: VSH	VERSION: BPT 3
DATE: 09/26/90	NAME: MAG	VERSION: INK 4

FSS

MMU

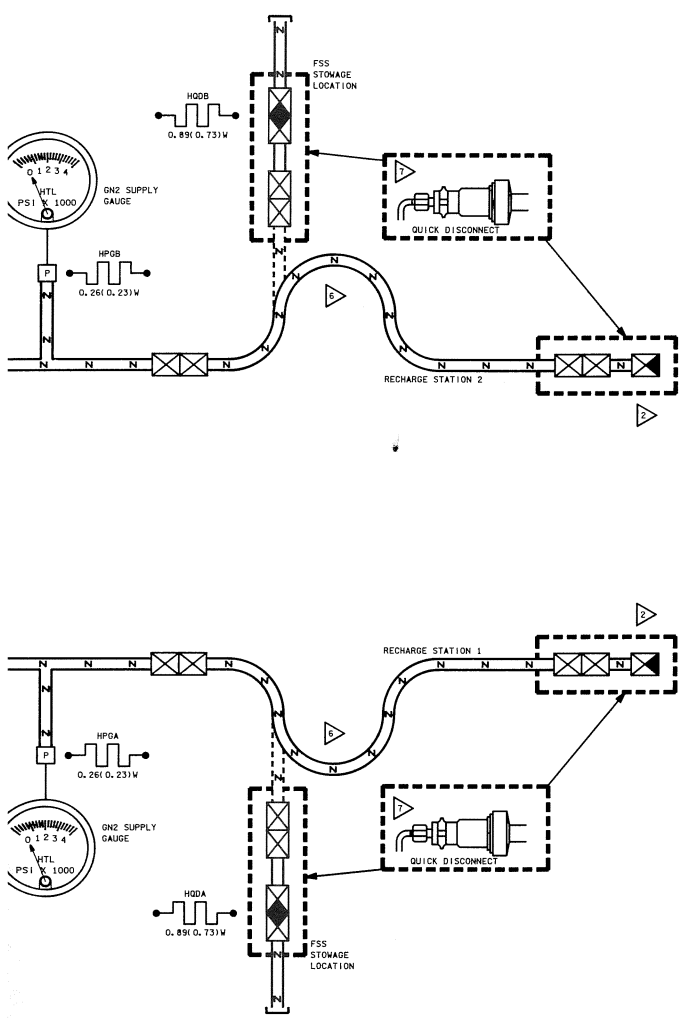

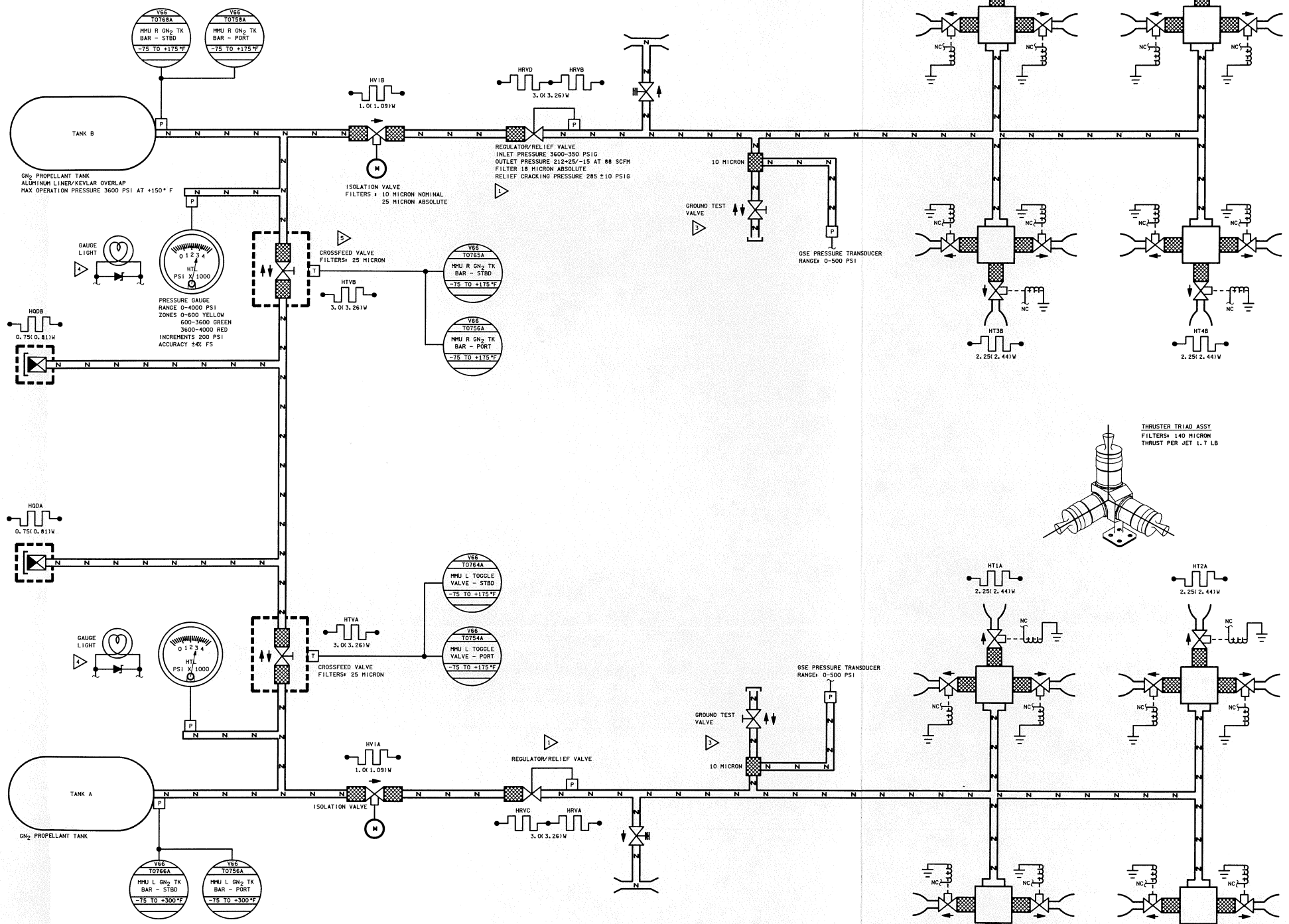

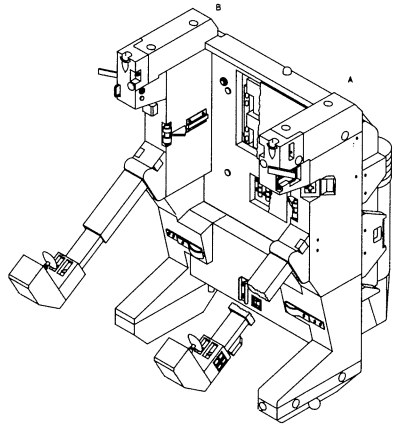

△1 PORT ELEC/GN2 INTERFACES ARE PROVIDED ON OV-103, OV-104, AND OV-105 ONLY

△2 STARBOARD ELEC/GN2 INTERFACES ARE PROVIDED ON OV-104 AND OV-105 ONLY

△3 OTHER MMU AND FSS HEATERS NOT ASSOCIATED WITH THE PROPULSION SYSTEM ARE NOT SHOWN

△4 POWER CONSUMPTION FOR MMU HEATERS LISTED AS: ON INTERNAL (ON EXTERNAL) POWER

△5 POWER CONSUMPTION FOR FSS HEATERS LISTED AS: WITH MMU (WITHOUT MMU)

△6 MANUAL VALVE USED TO BLEED DOWN LINE PRESSURE AT FSS FOR REMOVAL/SERVICING (GROUND OPS ONLY)

△7 THIS B-NUT USED BY CREW FOR CONTINGENCY RELEASE OF QD DURING MMU RECHARGE

△8 FLEXIBLE HOSE WITH B-NUT DISCONNECTS

△9 FSS VENT VALVE IS A MOMENTARY OPEN, NORMALLY CLOSED VALVE. FSS SUPPLY VALVE AND MMU CROSSFEED/RECHARGE VALVES HAVE DETENTS IN THE OPEN AND CLOSED POSITION

△10 THE MMU GAGE LIGHT ACTS AS A HEATER AS WELL AS ILLUMINATING THE PRESSURE GAGE

△11 THE VALVE, FILTER AND PRESSURE TRANSDUCER ARE FOR GROUND TEST PURPOSES ONLY AND ARE NOT CREW ACCESSIBLE IN FLIGHT

△12 THE COUPLER (FEMALE) HALF OF THE QUICK DISCONNECT HAS AN INTEGRAL MANUAL VALVE. WHEN DEMATED FROM THE NIPPLE THE COUPLER IS LOCKED IN THE CLOSED POSITION. WHEN MATED, THE COUPLER CAN BE OPENED OR CLOSED TO CONTROL FLOW

NOTES: △13 THE PRESSURE REGULATOR, RELIEF VALVE AND FILTERS, ARE AN INTEGRAL UNIT. HEATER HRVD(A) IS FOR THE REGULATOR PORTION AND HEATER HRVD(C) IS FOR THE RELIEF VALVE

11 MMU & FSS PROP

SIGNATURE		DATE	NATIONAL AERONAUTICS AND SPACE ADMINISTRATION LYNDON B. JOHNSON SPACE CENTER HOUSTON, TEXAS
DSGN	B. J. TEDDER JR.	3/4/88	
DR	L. M. BUCHANAN		MMU & FSS PROPULSION SCHEMATIC
ENGR	S. BLEISATH		
ENGR	Sara A Bleisath	9/27/90	
APP	[signature]	9/27/90	
APP	R.T. Neal	9/28/90	SPACE SHUTTLE — DWG NO 6.11
OMNIPLAN	S. K. Kimball	11-27-90	ALL
LTR	E	IPCN	104.5 X 34 — PAGE SHEET 1 OF 1

BASIC REV E

DATE: 9/26/90 | NAME: MAG | VERSION: INK, 4

ORBITER | FSS

MANUAL BARREL NUTS

VENT TOGGLE VALVE

GN_2 SUPPLY GAUGE

SUPPLY TOGGLE VALVE

COVER PLATE

N_2 SUPPLY PRI SYS A 40V61TP40

N_2 SUPPLY SEC SYS B 40V61TP41

MMU-FSS PWR B

MMU-FSS PWR A

MMU/FSS ELEC/GN_2 INTERFACE PNL (STBD)

V61 P2301A OF3 | OM1 — SYS 1 N_2 SUPPLY PRESS — 0 TO 3500 PSIA — 1 S/S — 10 — TO SM COMPUTER 6.1-1

TO CABIN REGULATOR 6.1-2

N_2 TANK 1

V61 T2406A OF3 | OM2 — SYS 1 N_2 TANK 1 TEMP — -75 TO +175° F — 1 S/S — 8 — TO SM COMPUTER 6.1-1

SYS 1

N_2 TANK 2

V61 T2407A OF1 | OM1 — SYS 1 N_2 TANK 2 TEMP — -75 TO +175° F — 1 S/S — 9 — TO SM COMPUTER 6.1-1

MN A MANNED MANUV UNIT GN_2 SPLY ISOL VLV A — 3A — PNL ML86B+D CB74

V_{MNA} ML86B

MANNED MANUV UNIT GN_2 SPLY ISOL VLV A — OP/CL — PNL R13L S11

V61 X2434E OF1 | N/A — MMU GN_2 SPLY ISOL VLV A-OP — 1=OPEN — 1 S/S

V61 X2436E OF1 | N/A — MM GN_2 SPLY ISOL VLV A-CL — 1=CLOSED — 1 S/S

MN B MANNED MANUV UNIT GN_2 SPLY ISOL VLV B — 3A — PNL ML86B+D CB63

V_{MNB} ML86B

MANNED MANUV UNIT GN_2 SPLY ISOL VLV B — OP/CL — PNL R13L S10

V61 X2435E OF1 | N/A — MMU GN_2 SPLY ISOL VLV B-OP — 1=OPEN — 1 S/S

V61 X2433E OF1 | N/A — MMU GN_2 SPLY ISOL VLV B-CL — 1=CLOSED — 1 S/S

N_2 TANK 1

V61 T2408A OF3 | OM2 — SYS 2 GN_2 TANK 1 TEMP — -75 TO +175° F — 1 S/S — 11 — TO SM COMPUTER 6.1-1

SYS 2

N_2 TANK 2

V61 T2409A OF1 | OM1 — SYS 2 GN_2 TANK 2 TEMP — -75 TO +175° F — 1 S/S — 12 — TO SM COMPUTER 6.1-1

V61 P2309A OF2 | OM2 — SYS 2 GN_2 SUPPLY PRESS — 0 TO 3500 PSIG — 1 S/S — 13 — TO SM COMPUTER 6.1-1

TO CABIN REGULATOR 6.1-2

COVER PLATE

N_2 SUPPLY PRI SYS A 40V61TP29

N_2 SUPPLY SEC SYS B 40V61TP30

MMU-FSS PWR B

MMU-FSS PWR A

MMU/FSS ELEC/GN_2 INTERFACE PNL (PORT)

40V61TP40 — 40V61TP29 — 40V61TP41 — 40V61TP30 — 40V61TP30 — 40V61TP29 — 40V61TP30 — 40V61TP29

STARBOARD INSTALLATION

PORT INSTALLATION

SPLY OPEN CLOSE

V66 T0763A FSS R TOGGLE VALVE - STBD -75 TO +175°F

V66 T0753A FSS R TOGGLE VALVE - PORT -75 TO +175°F

10 MICRON

HPFB 0.89(0.73)W

HTVB1 4.85(4.07)W

SUPPLY VALVE FILTERS, 25 MICRON

VENT VALVE FILTERS, 25 MICRON ABSOLUTE

VENT OPEN CLOSE

HTVB 4.85(4.07)W

GN2 SUPPLY GAUGE

HPGB 0.26(0.23)W

HQDB 0.89(0.73)W

HPFA 0.89(0.73)W

HTVA1 4.85(4.07)W

SUPPLY VALVE

10 MICRON

SPLY OPEN CLOSE

V66 T0762A FSS L TOGGLE VALVE - STBD -75 TO +175°F

V66 T0752A FSS L TOGGLE VALVE - PORT -75 TO +175°F

VENT VALVE

HTVA 4.85(4.07)W

GN2 SUPPLY GAUGE

HPGA 0.26(0.23)W

HQDA 0.89(0.73)W

VENT OPEN CLOSE

BASIC REV E

DATE: 9/26/90 | NAME: MAG | VERSION# INK, 4

ORBITER | FSS

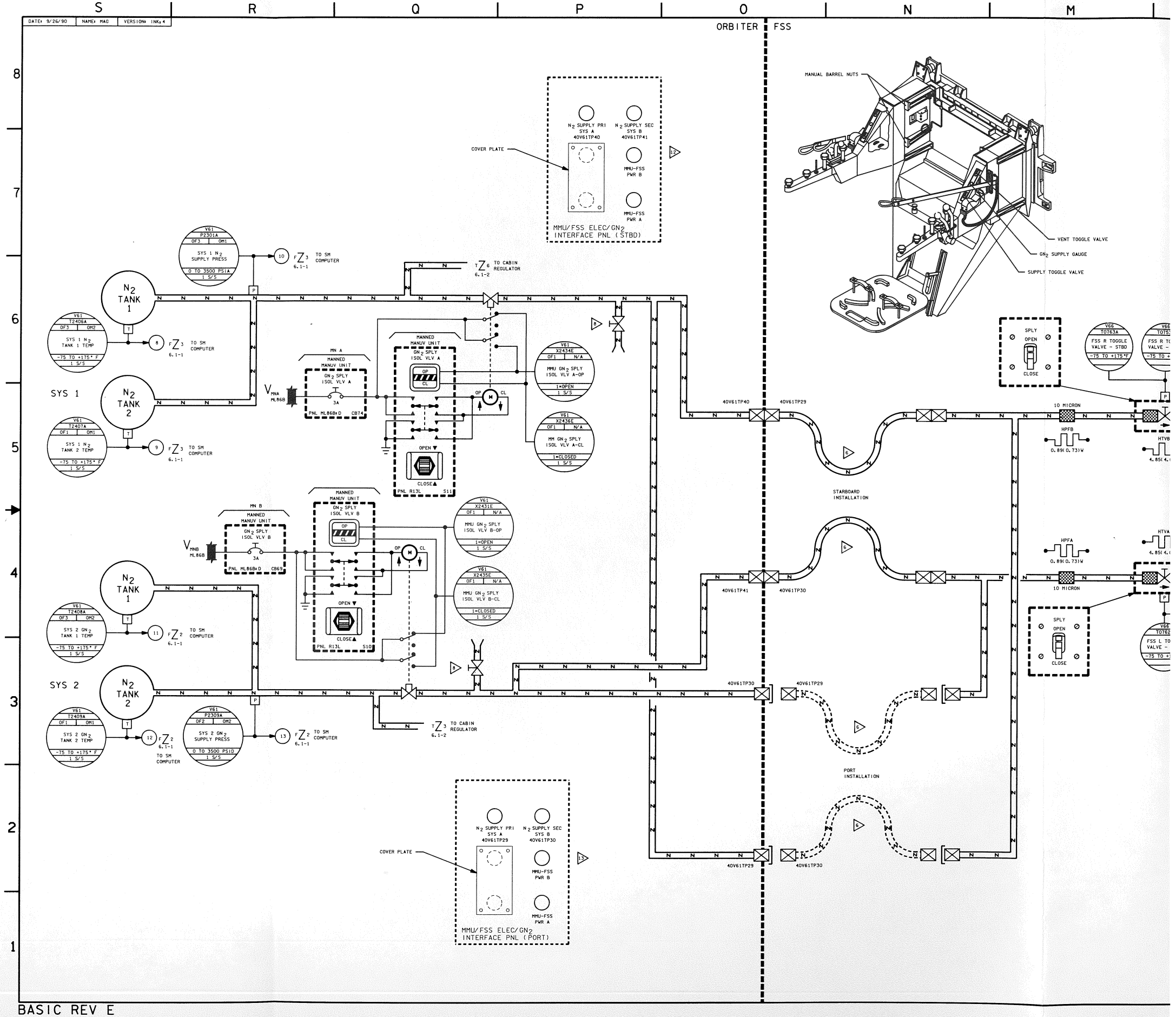

BASIC REV E

DATE: 07/28/94	NAME: LAM	VERSION: INK: 6
DATE: 02/20/96	NAME: JHB	VERSION: BPT: 24
DATE: 03/04/96	NAME: MDU	VERSION: INK: 7

CNTRL 2 28V DC PEV OPEN CMD

CNTRL 1 AC1 3Ø FAN POWER

PEV OPEN CMD CNTRL 2

V61 T2924A OF 2 | N/A — INLET TEMP — 32 TO 133°F — 1 S/S C — CNTRL S/C — ±12VDC 17 — zZ7 zZ6

V61 P2921A OF 3 | N/A — CO_2 PARTIAL PRESS — 0 TO 30 MMHG — 1 S/S F — CNTRL S/C — ±12VDC 14 — zZ7 zZ8

V61 P2923A OF 2 | N/A — FILTER ΔP — 0 TO 3 IN H2O — 1 S/S F — CNTRL S/C — ±12VDC 15 — zZ6 zZ8

V61 P2922A OF 1 | N/A — VACUUM PRESSURE — 0 TO 5 MMHG — 1 S/S C — zZ6

FLOW CONTROL VALVE

HUFFLER — 40 μM — INLET FILTER/HUFFLER/FAN ASSEMBLY — HUFFLER — zZ8 6.2

CNTRL 2 AC3 3Ø FAN POWER

BED A PRESS zZ6
BED B PRESS zZ4
BED ΔP zZ5
TEMP zZ6
$PPCO_2$ zZ8
VACUUM PRESS zZ7
FILTER ΔP zZ8

CNTRL 2 XDUCER POWER — BED A zZ6 ±12VDC 7 — BED B zZ4 ±12VDC 8 — BED ΔP zZ5 ±12VDC 9

CNTRL 1 XDUCER POWER — BED A zZ6 ±12VDC 10 — BED B zZ4 ±12VDC 11 — BED ΔP zZ3 ±12VDC 12

VCV A INLET — VCV B INLET — VACUUM POPPET — AIR POPPETS — VACUUM POPPET

V61 P2901A OF 1 | N/A — CNTRL 1 BED A PRESSURE — 0 TO 20 PSIA — 1 S/S C — zZ5 ±12VDC 10 — CNTRL S/C — zZ7

V61 P2911A OF 3 | N/A — CNTRL 2 BED A PRESSURE — 0 TO 20 PSIA — 1 S/S C — zZ5 ±12VDC 7 — CNTRL S/C — zZ7

zZ6 CNTRL S/C ±12VDC 16 zZ8

CNTRL 2 28V DC

PRESSURE EQUALIZATION VALVE (PEV) MODULE

NC — PEV 3

V61 P2902A OF 2 | N/A — CNTRL 1 BED B PRESSURE — 0 TO 20 PSIA — 1 S/S C — zZ5 ±12VDC 11 — CNTRL S/C — zZ7

V61 P2912A OF 1 | N/A — CNTRL 2 BED B PRESSURE — 0 TO 20 PSIA — 1 S/S C — zZ5 ±12VDC 8 — CNTRL S/C — zZ7

NC — PEV 1 — NC — PEV 2 — NC — PEV 4 — NC — PEV 5 — NC — PEV 6

ACTUATOR A "OPEN" CW BED A AIR POPPETS BED B VACUUM POPPETS — CW (OP) — CCW (CL) POSITION

ACTUATOR, POSITION INDICATOR AND BRAKING LATCH — +8A DC — CW (OP) COIL — CCW (CL) COIL — zZ6 31 — zZ6 33 — zZ5 30 +12V PWR A(C) — zZ5 35 +12V PWR A(C)

CW (OP) AND CCW (CL) (2 WIRES)

CW (OP) AND CCW (CL) (2 WIRES)

NOTE: VCVs SHOWN CONFIGURED FOR STATE NO. 8

ACTUATOR, POSITION INDICATOR AND BRAKING LATCH — +8A DC — CW (OP) COIL — CCW (CL) COIL — 10 — +12V PWR A(C) 30 zZ3 — +12V PWR A(C) 35 zZ3 — CNTRL 1 CCW 32 zZ6 — CNTRL 2 CCW 34 zZ6

CCW (CL) — CW (OP) — ACTUATOR B "OPEN" CW BED A VACUUM POPPETS BED B AIR POPPETS

BED A — BED B

CNTRL 1 AC1 ØA — CW (OP) AND CCW (CL) (2 WIRES)

CNTRL 2 AC3 ØA — CW (OP) AND CCW (CL) (2 WIRES)

V61 P2903A OF 3 | N/A — CNTRL 1 BED ΔP — 0 TO 5 IN H2O — 1 S/S C — zZ5 ±12VDC 9 — CNTRL S/C — zZ7

±12VDC 12 zZ5 — CNTRL S/C — zZ7

V61 P2913A OF 2 | N/A — CNTRL 2 BED ΔP — 0 TO 5 IN H2O — 1 S/S C

CNTRL 1 28V DC

AC1 4 — AC3 4

COMPRESSOR RPM INDICATOR TO CONTROL LOGIC — 23 24 — zZ6

ΔP=0.5 PSI — MUFFLER — MUFFLER — zZ7 6.2

VCV B OUTLET — VACUUM POPPET — AIR POPPETS — VACUUM POPPET — VCV A OUTLET

TO VACUUM VENT DUCT — zZ6 zZ7 6.13-1 6.5

CNTRL 2 AC3 3Ø	COMPRESSOR POWER
CNTRL 1 AC1 3Ø	COMPRESSOR POWER
CNTRL 1 28V DC	PEV OPEN CMD (6 WIRES)

COMPRESSOR POWER CNTRL 2
COMPRESSOR POWER CNTRL 1
PEV OPEN CMD CNTRL 1

23. LOGIC COMPONENTS THAT ARE NOT LABELED ARE FUNCTIONAL REPRESENTATIONS OF THE ACTUAL COMPONENTS. THESE REPRESENTATIONS ARE USED TO SIMPLIFY THE CONTROLLER LOGIC. GATES AND FLIP FLOPS WHICH ARE LABELED (U2.4, U1.3, ETC.) ARE ACTUAL COMPONENTS WITHIN THE CONTROLLER. THESE LABELS CORRESPOND TO THE VENDOR DRAWING LABELS. THESE GATE LABELS ARE ALSO USED IN THE EECOM CONSOLE HANDBOOK

A. 0.21 IN ID BED REPRESS LINE ACTS AS RESTRICTION

B. FLIP-FLOPS FOR STATE 4D, 10D AND 5, 11 INTENTIONALLY LEFT OUT IN DRAWING

20. LINKAGES, AND DISPLACEMENTS OF PUSHRODS SHOWN ARE NOT REPRESENTATIVE OF THE ACTUAL CO2 RMVL SYS UNIT. SEE DWG 6.12-2

C. CONNECTOR J4 IS CAPPED AND LANYARD ON CONTROLLER 2

D. LOGIC SCHEMATIC DOES NOT REFLECT ACTUAL CONTROLLER LOGIC CIRCUITRY

E. OPTOCOUPLER OF FAIL LIGHT EMPLOYS REVERSE LOGIC: REQUIRES +12V POWER A(C) SIGNAL TO TURN OFF LIGHT. HENCE, APPLYING ONLY MN A(C) DC POWER, THE RCRS WILL TURN ON THE LIGHT

F. REFERENCE STATE TABLE FOR OUTPUT DECODER FUNCTION

G. AN ACTIVE STATE WILL GND SPECIFIC WIRES AS INDICATED IN THE STATE LOGIC TABLE. NORMAL OFF CONDITION IS +12V

H. ON DISP 66, NEAR THE CONTROLLER NUMBER, AN * WILL APPEAR WHEN A CONTROLLER AC AND A CONTROLLER DC POWER IS ON. THE ASTERISK IS AN INDICATION THE CO2 RMVL SYS IS POWERED, NOT OPERATING

I. CONTROLLER MALFUNCTION FAULT TELEMETRY DURATION IS 6 SECONDS DUE TO TIME DURATION BETWEEN S1 AND S10. PANEL MOSIF FAIL LIGHT WILL STAY ILLUMINATED UNTIL CONTROLLER IS UNPOWERED

J. COMMON INSTRUMENTATION CIRCUITRY HOUSED ON BOTH CONTROLLERS AND IS INDEPENDENT OF CONTROLLER OPERATIONS. CIRCUITRY ON CONTROLLER 1 ARBITRARILY SELECTED TO RECEIVE POWER FROM MAIN B. COMMON INSTRUMENTATION (VACUUM PRESSURE, FILTER DELTA PRESSURE, TEMPERATURE AND $PPCO_2$) IS USED FOR SYSTEM PERFORMANCE AND EVALUATION

11. TWO POSITION MANUAL VALVE SETTING
-5,6,7 CREW SIZE 24.5 CFM
-4 CREW SIZE 16 CFM

10. MICROSWITCH VALVE POSITION INDICATOR (VPI): VPI'S ARE INTERNALLY MOUNTED IN THE ACTUATOR AND ARE REDUNDANT TO EACH CONTROLLER. ACTUATORS ONLY PROVIDE CCW(OR CLOSED) FEEDBACK, THE WIRES FOR THE CW(OR OPEN) INDICATION HAVE BEEN SPLICED TO CONSTANTLY SHOW A OPEN FEEDBACK TO THE CONTROLLER

9. VALVES DESIGNED TO AUTOMATICALLY CLOSE WITH A LOSS OF POWER

8. CO2 RMVL SYS DIMENSION: 38 3/4" X 18 3/4" X 20", WEIGHT = 330 LBS

7. POPPETS WILL NOT OPEN IF ΔP >3.4 PSI

6. CO2 RMVL SYS SORBENT MATERIAL CONSISTS OF 0.5MM WHITE SPHERICAL BEADS OF XA-D-7, A POROUS POLYMERIC ACRYLIC ESTER SUBSTRATE, THINLY COATED WITH A VISCOUS LIQUID OF PEI-18, POLYETHYLENIMINE. THE SORBENT IS PACKED WITHIN A MATRIX ALUMINUM FOAM TO FACILITATE HEAT TRANSFER BETWEEN THE ABSORBING BED WHICH GENERATES HEAT AND THE REGENERATING BED WHICH REQUIRES HEAT

5. CANISTER FILTER SCREEN 400 X 400 X 0.001 300 STAINLESS STEEL WIRE SUPPORTED BY 2 X 2 X 0.047 300 STAINLESS STEEL WIRE

4. ACTUATOR PROVIDES 10-20 IN-LBS MIN TORQUE. SINGLE PHASE 115V 400 HZ MOTOR

3. MUFFLER
-OPEN CELL POLYIMIDE FOAM

2. INLET FILTER/MUFFLER/FAN ASSEMBLY
- 50 (±0.0055 WIRE DIA) X 250 (0.0045 WIRE DIA)
- IDENTICAL TO CABIN FAN FILTER
- 40 MICRON NOMINAL FILTRATION, 70 MICRON ABSOLUTE FILTRATION

NOTES: 1. ROTARY TYPE COMPRESSOR 450 SCFM AT 4000 RPM COMPRESSOR. MOTOR 115 VOLTS 3 PHASE 400 HZ INDUCTION, MAXIMUM INPUT POWER 250 WATTS

12 EDO-CO2 RMVL SYS

SIGNATURE	DATE	NATIONAL AERONAUTICS AND SPACE ADMINISTRATION LYNDON B. JOHNSON SPACE CENTER HOUSTON, TEXAS
DSGN V. HUNTER	8/15/90	
DR		
ENGR P. LAMCZYK		EDO - CO2 REMOVAL SYSTEM
ENGR		
APP		
APP		SPACE SHUTTLE — DWG NO 6.12
CADS S.K. Kirshey 6-7-96		OV 102,105 ONLY
LTR E — PCN 6		126.5 X 34 — PAGE — SHEET 1 OF 2

BASIC REV E-6

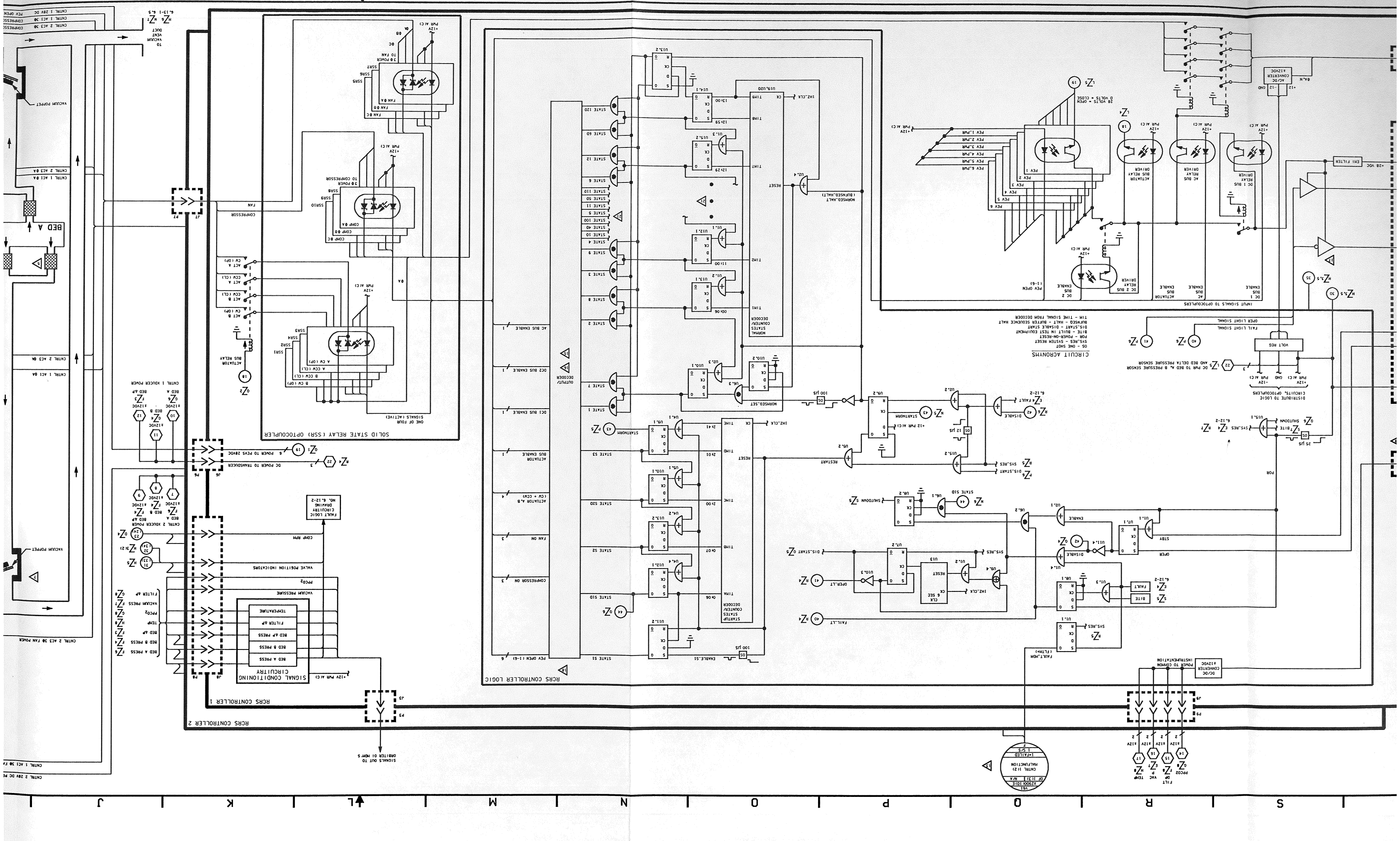
SOLID STATE RELAY (SSR) OPTOCOUPLER
ONE OF FOUR SIGNALS (ACTIVE)
SIGNAL CONDITIONING CIRCUITRY
TEMPERATURE
FILTER ΔP
VACUUM PRESS
PPCO2
TEMP
BED ΔP
BED A PRESS
BED B PRESS
BED A PRESS
BED B PRESS
BED ΔP
FAULT LOGIC CIRCUITRY DRAWING NO. 6.12-2
RCRS CONTROLLER 1
RCRS CONTROLLER 2
RCRS CONTROLLER LOGIC
INPUT SIGNALS TO OPTOCOUPLERS
CIRCUIT ACRONYMS
OS - ONE SHOT
SYS_RES - SYSTEM RESET
BITE - BUILT IN TEST EQUIPMENT
POR - POWER-ON-RESET
DIS_START - DISABLE START
BUFMSEQ - HALT - BUFFER SEQUENCE HALT
TIM - TIME SIGNAL FROM DECODER
DISTRIBUTE TO LOGIC CIRCUITS, OPTOCOUPLERS
SIGNALS OUT TO OMNITECH 01 MOM'S
POWER TO CONROM INSTRUMENTATION
DC/DC CONVERTER +12VDC
AC/DC CONVERTER +12VDC
+28 VDC
EMI FILTER
VACUUM POPPET
BED A
BED B
VACUUM VENT DUCT
TO VACUUM DUCT
ACTUATOR RELAY BUS
DC 1 BUS RELAY DRIVER
AC BUS RELAY DRIVER
ACTUATOR RELAY DRIVER
DC 2 BUS RELAY DRIVER
DC 1 BUS ENABLE
AC BUS ENABLE
ACTUATOR BUS ENABLE
DC 2 BUS ENABLE
28 VOLTS - OPEN
0 VOLTS - CLOSE
VOLT REG
FAIL LIGHT SIGNAL
OPER LIGHT SIGNAL
DC PWR TO BED A, B PRESSURE SENSOR AND BED DELTA PRESSURE SENSOR
SHUTDOWN
FAULT
BITE
OPER
ENABLE
DISABLE
START
RESTART
NORMSEQ_HALT
NORMAL STATES COUNTER/ DECODER
STARTUP STATES COUNTER/ DECODER
IHZ_CLK
TIM1
TIM2
TIM7
TIM8
TIM9
TIMA
TIMC
TIMD
TIME
RESET
STATE 1
STATE 2
STATE 3
STATE 4
STATE 5
STATE 6
STATE 7
STATE 8
STATE 9
STATE 10
STATE 11
STATE 12
STATE 40
STATE 50
STATE 100
STATE 110
STATE 120
STATE S1D
STATE S2D
STATE S2
STATE S3
AC BUS ENABLE
DC1 BUS ENABLE
DC2 BUS ENABLE
ACTUATOR BUS ENABLE
ACTUATOR A,B CCW + CCW1
FAN ON
COMPRESSOR ON
PEV OPEN (1-6)
OUTPUT/ DECODER
100 μs
25 μs
12 μs
2 sec
6 sec
FAULT_LMSM (FLTM+)
SYS_RES
DIS_START
SHUTDOWN
STARTNORM
+12 PWR AC(-)
+12 PWR AC(+)
+12 PWR AC(D)
+12 PWR AC(C)
+12 PWR AC(B)
+12 PWR AC(A)
+12 PWR AC
-12 PWR AC
PEV 1_PWR
PEV 2_PWR
PEV 3_PWR
PEV 4_PWR
PEV 5_PWR
PEV 6_PWR
PEV 1
PEV 2
PEV 3
PEV 4
PEV 5
PEV 6
COMPRESSOR
FAN
FAN ΔA
FAN ΔB
FAN ΔC
COMP ΔA
COMP ΔB
COMP ΔC
ACT A CW (OP)
ACT A CCW (CL)
ACT B CCW (CL)
ACT B CW (OP)
A CW (OP)
A CCW (CL)
B CW (OP)
B CCW (CL)
SSR1
SSR2
SSR3
SSR4
SSR5
SSR6
SSR7
SSR8
SSR9
SSR10
3 Φ POWER TO COMPRESSOR
3 Φ POWER TO FAN
DC POWER TO TRANSDUCER
6 POWER TO PEVS 28VDC
CNTRL 1 XDUCER POWER
CNTRL 2 XDUCER POWER
CNTRL 1 ACT 0A
CNTRL 2 ACT 0A
CNTRL 1 ACT 30
CNTRL 2 ACT 30
CNTRL 1 ACT 30 FAN POWER
CNTRL 2 ACT 30 FAN POWER
CNTRL 1 28V DC
CNTRL 2 28V DC
COMP RPM
VALVE POSITION INDICATORS
PPCO2
VACUUM PRESSURE
+12VDC
P1
P2
P3
P4
P5
P6
P7
P8
P9
J1
J2
J3
J4
J5
J6
J7
J8
J9

DATE: 03/04/96 | NAME: MDU | VERSION: INR17

STATE LOGIC TABLE

STATE NUMBER	STATE DESCRIPTION	VACUUM CYCLE VALVE COMMANDS: A CV	A CCV	B CV	B CCV	PRESSURE EQUALIZATION VALVES: PEV1	PEV2	PEV3	PEV4	PEV5	PEV6	PRESSURE SENSORS: PS-A	PS-B	FAN	COMP	TIME: START	FINISH	DELTA TIME
S0	START					CL	CL	CL	CL	CL	CL	---	---	OFF	OFF	00:00	00:06	00:06
S1	ISOLATE BEDS		X		X	CL	CL	CL	CL	CL	CL	---	---	OFF	OFF	00:06	00:12	00:06
S1D	✓ POPPETS CLOSED					CL	CL	CL	CL	CL	CL	---	---	OFF	OFF	00:12	00:13	00:01
S2	PURGE BED A					OPEN	CL	CL	CL	CL	CL	0.0	---	OFF	OFF	00:13	02:06	01:53
S2D	✓ EQUALIZE VALVE PRESSURE					CL	CL	CL	CL	CL	CL	0.0	---	OFF	OFF	02:06	02:07	00:01
S3	EQUALIZE VALVE PRESSURE					CL	CL	OPEN	OPEN	CL	CL	14.7	0.0	ON	OFF	02:07	02:48	00:41
1	OPEN VACUUM CYCLE VALVES	X				CL	CL	CL	CL	CL	CL	14.7	0.0	ON	OFF	00:00	00:06	00:06
2	ADSORB A, REGEN BED B					CL	CL	CL	CL	CL	CL	14.7	0.0	ON	OFF	00:06	11:00	10:54
3	ISOLATE BEDS		X			CL	CL	CL	CL	CL	CL	14.7	0.0	ON	OFF	11:00	11:06	00:06
4	ULLAGE SAVE BED A					CL	OPEN	CL	CL	CL	CL	3.0	0.0	ON	ON	11:06	12:21	01:15
4D	✓ ULLAGE SAVE					CL	OPEN	CL	CL	CL	CL	3.0	0.0	ON	OFF	12:21	12:22	00:01
5	EQUALIZE BED PRESSURE					CL	OPEN	CL	CL	OPEN	CL	1.5	1.5	ON	OFF	12:22	12:28	00:06
5D	✓ BED EQUALIZATION					CL	CL	CL	CL	CL	CL	1.5	1.5	ON	OFF	12:28	12:29	00:01
6	EQUALIZE VALVE PRESSURE					OPEN	CL	CL	CL	OPEN	CL	0.0	14.7	ON	OFF	12:29	12:59	00:30
6D	✓ AIR POPPET EQUAL					CL	CL	CL	CL	CL	CL	0.0	14.7	ON	OFF	12:59	13:00	00:01
7	OPEN VACUUM CYCLE VALVES			X		CL	CL	CL	CL	CL	CL	0.0	14.7	ON	OFF	13:00	13:06	00:06
8	ADSORB B, REGEN BED A					CL	CL	CL	CL	CL	CL	0.0	14.7	ON	OFF	13:06	24:00	10:54
9	ISOLATE BEDS				X	CL	CL	CL	CL	CL	CL	0.0	14.7	ON	OFF	24:00	24:06	00:06
10	ULLAGE SAVE BED B					CL	CL	CL	CL	OPEN	CL	0.0	3.0	ON	ON	24:06	25:21	01:15
10D	✓ ULLAGE SAVE					CL	CL	CL	CL	OPEN	CL	0.0	3.0	ON	OFF	25:21	25:22	00:01
11	EQUALIZE BED PRESSURE					CL	OPEN	CL	CL	OPEN	CL	1.5	1.5	ON	OFF	25:22	25:28	00:06
11D	✓ BED EQUALIZATION					CL	CL	CL	CL	CL	CL	1.5	1.5	ON	OFF	25:28	25:29	00:01
12	EQUALIZE VALVE PRESSURE					CL	CL	OPEN	OPEN	CL	CL	14.7	0.0	ON	OFF	25:29	25:59	00:30
12D	✓ AIR POPPET EQUAL					CL	CL	CL	CL	CL	CL	14.7	0.0	ON	OFF	25:59	26:00	00:01

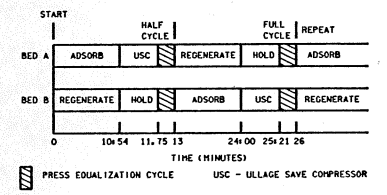

DATE: 10/25/91	NAME: VSH	VERSION INK: 2
DATE: 11/04/91	NAME: BJT	VERSION INK: 3
DATE: 11/19/91	NAME: PSD	VERSION INK: 4

REDUNDANTLY POWERED VALVES 28VDC (28 WATTS/VALVE)

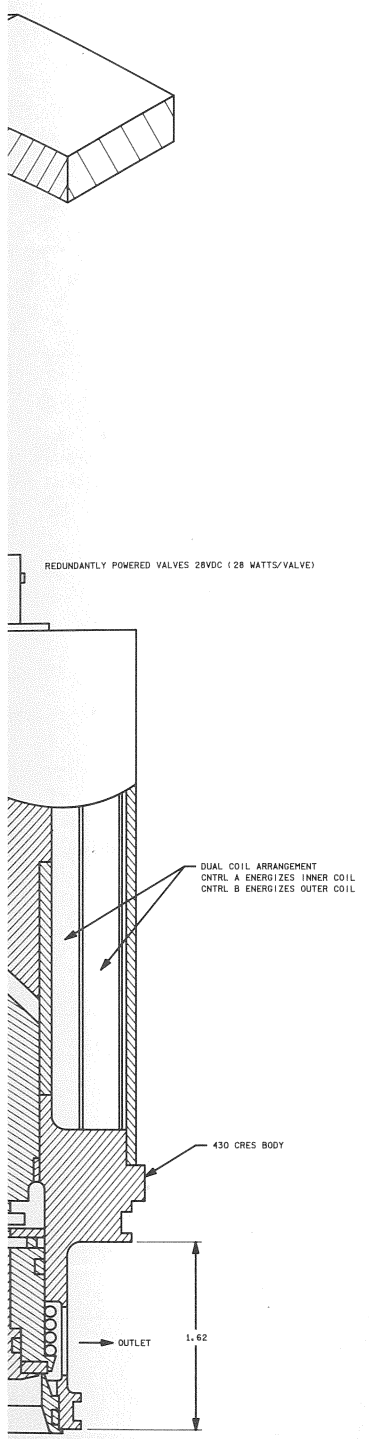

PEV MODULE MANIFOLD PROVIDES 50 MESH DISC-TYPE FILTER

ION VALVE (PEV)

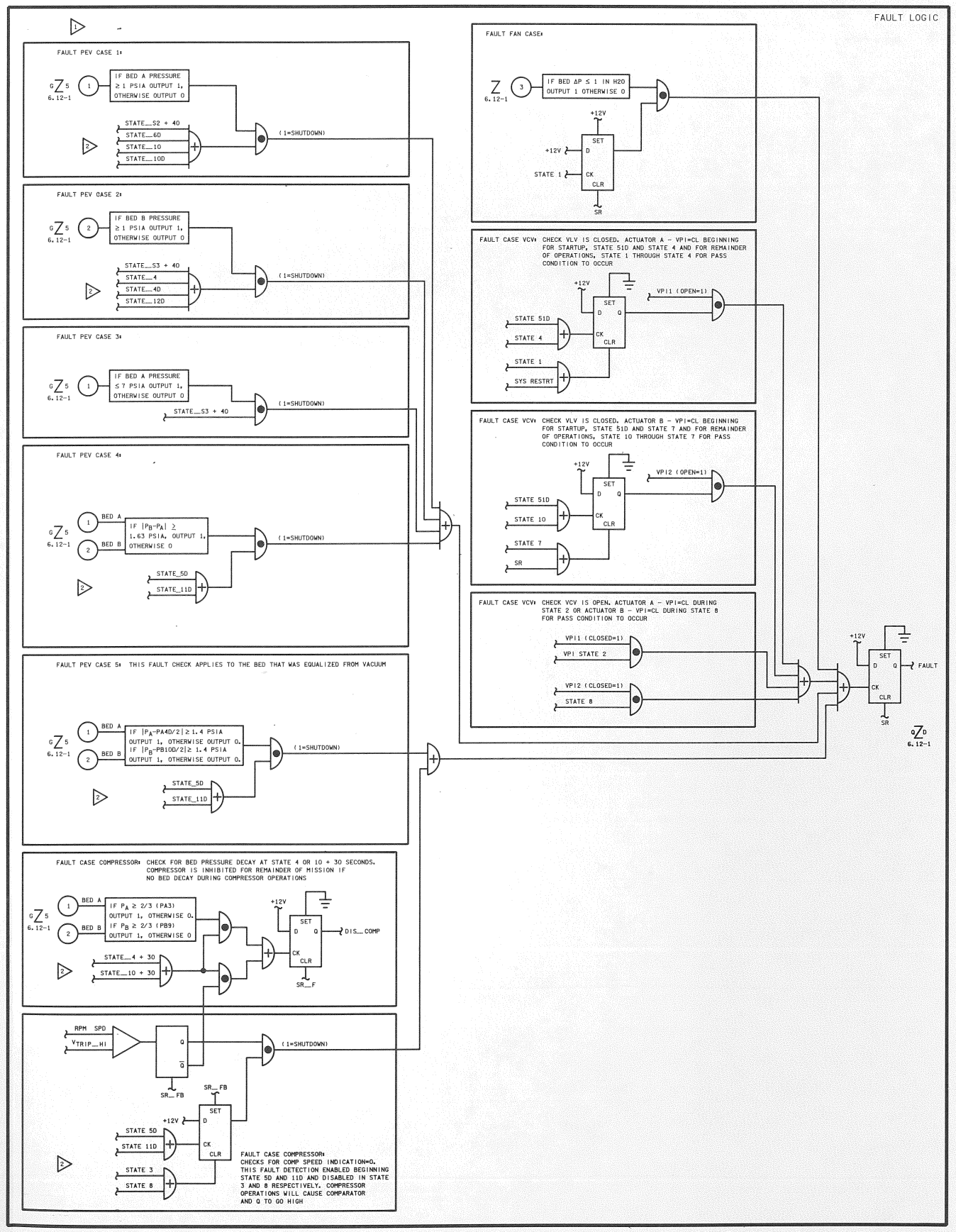

STATE NUMBER	STATE DESCRIPTION	VACUUM CYCLE VALVE ACTUATORS				PRESSURE EQUALIZATION VALVES						PRESSURE SENSORS		FAN	COMP	TIME		DELTA TIME	SYSTEM CYCLE TIME	NEXT STATE
		A CW	A CCW	B CW	B CCW	PEV1	PEV2	PEV3	PEV4	PEV5	PEV6	PS-A	PS-B			START	FINISH			
S1	ISOLATE BEDS		X		X	CL	CL	CL	CL	CL	CL	---	---	OFF	OFF	00:00	00:06	---	---	S1D
S1D	----------					CL	CL	CL	CL	CL	CL	---	---	OFF	OFF	00:06	00:07	---	---	S2
S2	PURGE BED A					OPEN	CL	CL	CL	CL	CL	0.0	---	OFF	OFF	00:07	02:00	---	---	S2D
S2D						CL	CL	CL	CL	CL	CL	0.0	---	OFF	OFF	02:00	02:01	---	---	S3
S3	EQUALIZE VALVE PRESSURE					CL	CL	OPEN	OPEN	CL	CL	14.7	0.0	ON	OFF	02:01	02:42	---	---	1
1	OPEN VACUUM CYCLE VALVES	X				CL	CL	CL	CL	CL	CL	14.7	0.0	ON	OFF	00:00	00:06	00:06	00:06	2
2	ADSORB A, REGEN BED B					CL	CL	CL	CL	CL	CL	14.7	0.0	ON	OFF	00:06	13:00	12:54	13:00	3
3	ISOLATE BEDS		X			CL	CL	CL	CL	CL	CL	14.7	0.0	ON	OFF	13:00	13:06	00:06	13:06	4
4	ULLAGE SAVE BED A					CL	OPEN	CL	CL	CL	CL	3.0	0.0	ON	ON	13:06	14:21	01:15	14:21	4D
4D	----------					CL	OPEN	CL	CL	CL	CL	3.0	0.0	ON	OFF	14:21	14:22	00:01	14:22	5
5	EQUALIZE BED PRESSURE					CL	OPEN	CL	CL	OPEN	CL	1.5	1.5	ON	OFF	14:22	14:28	00:06	14:28	5D
5D	----------					CL	CL	CL	CL	CL	CL	1.5	1.5	ON	OFF	14:28	14:29	00:01	14:29	6
6	EQUALIZE VALVE PRESSURE					OPEN	CL	CL	CL	CL	OPEN	0.0	14.7	ON	OFF	14:29	14:59	00:30	14:59	6D
6D	----------					CL	CL	CL	CL	CL	CL	0.0	14.7	ON	OFF	14:59	15:00	00:01	15:00	7
7	OPEN VACUUM CYCLE VALVES			X		CL	CL	CL	CL	CL	CL	0.0	14.7	ON	OFF	15:00	15:06	00:06	00:06	8
8	ADSORB A, REGEN BED B					CL	CL	CL	CL	CL	CL	0.0	14.7	ON	OFF	15:06	28:00	12:54	13:00	9
9	ISOLATE BEDS				X	CL	CL	CL	CL	CL	CL	0.0	14.7	ON	OFF	28:00	28:06	00:06	13:06	10
10	ULLAGE SAVE BED B					CL	CL	CL	CL	OPEN	CL	0.0	3.0	ON	ON	28:06	29:21	01:15	14:21	10D
10D	----------					CL	CL	CL	CL	OPEN	CL	0.0	3.0	ON	OFF	29:21	29:22	00:01	14:22	11
11	EQUALIZE BED PRESSURE					CL	OPEN	CL	CL	OPEN	CL	1.5	1.5	ON	OFF	29:22	29:28	00:06	14:28	11D
11D	----------					CL	CL	CL	CL	CL	CL	1.5	1.5	ON	OFF	29:28	29:29	00:01	14:29	12
12	EQUALIZE VALVE PRESSURE					CL	CL	OPEN	OPEN	CL	CL	14.7	0.0	ON	OFF	29:29	29:59	00:30	14:59	12D
12D	----------					CL	CL	CL	CL	CL	CL	14.7	0.0	ON	OFF	29:59	30:00	00:01	15:00	1

*NOTE: SOLENOID VALVE REMAINS OPEN THROUGHOUT STATE

▷2 THE BED PRESSURE USED, IS AT THE SAME STATE NUMBER BEING CHECKED BY THE FAULT LOGIC

NOTES: ▷1 FOR DETAILED COMPONENT LOGIC REFER TO UNITED TECHNOLOGY HAMILTON STANDARD DRAWINGS SVSK117846-898

12 RCRS MECH/FAULT LOGIC 2

SIGNATURE		DATE	NATIONAL AERONAUTICS AND SPACE ADMINISTRATION LYNDON B. JOHNSON SPACE CENTER HOUSTON, TEXAS	
DSGN B. J. TEDDER JR.		9/28/90		
DR S. B. EGAN-WYER		9/28/90	RCRS MECHANICAL/FAULT LOGIC	
ENGR JIM SPIVEY				
ENGR		11-15-91		
APP		11-18-91		
APP			SPACE SHUTTLE	DWG NO 6.12
OMNIPLAN S.K. Kinstner		11.19.91	ALL	
LTR E	PCN 1		124.5 X 34	PAGE SHEET 2 OF 2

BASIC REV E-1

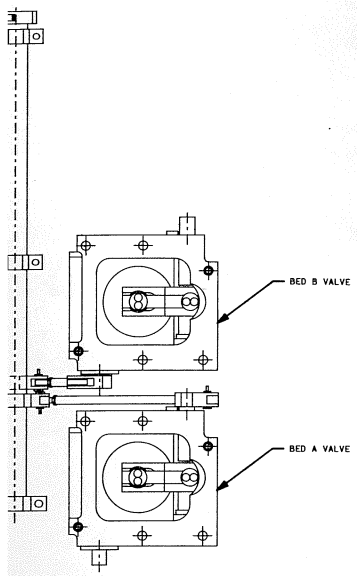

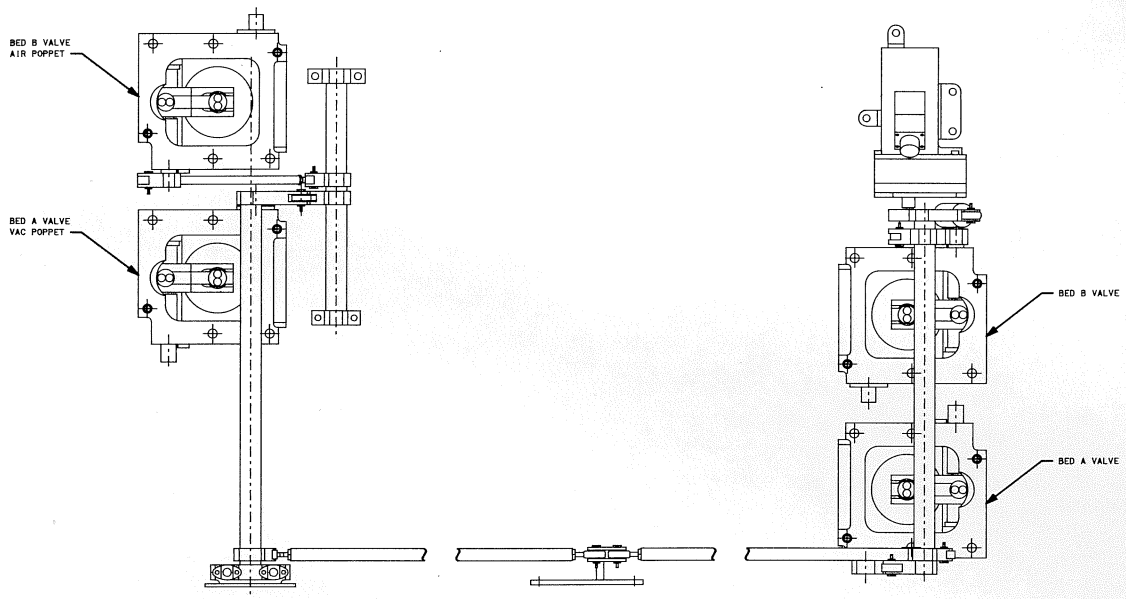

TOP VIEW
ACTUATOR B, DRIVES:
BED A VACUUM POPPETS
BED B AIR POPPETS

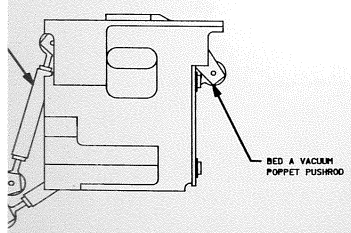

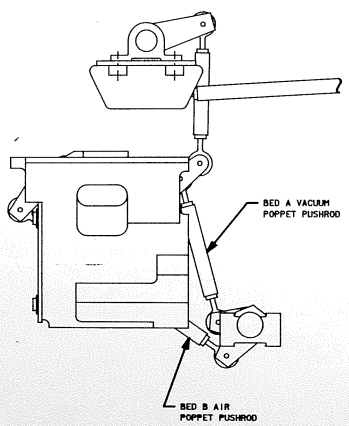

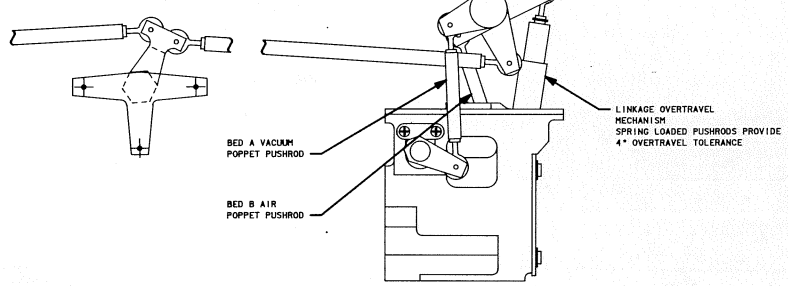

FRONT VIEW

MECHANICAL LINKAGE

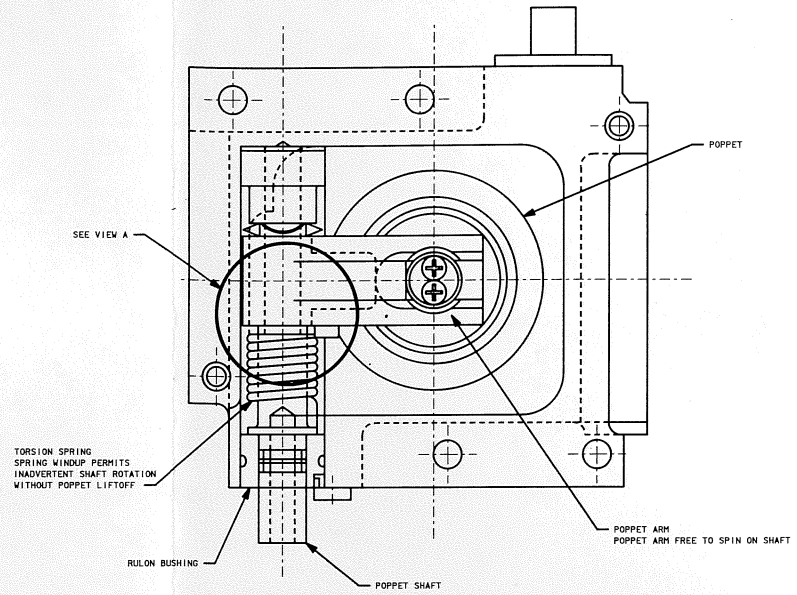

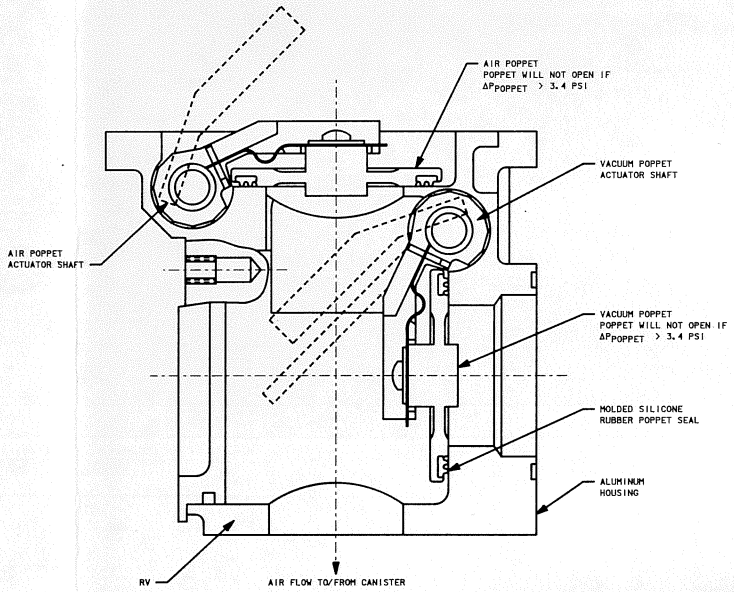

VACUUM CYCLE VALVE (VCV)

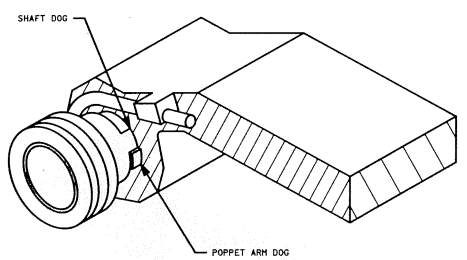

VIEW A

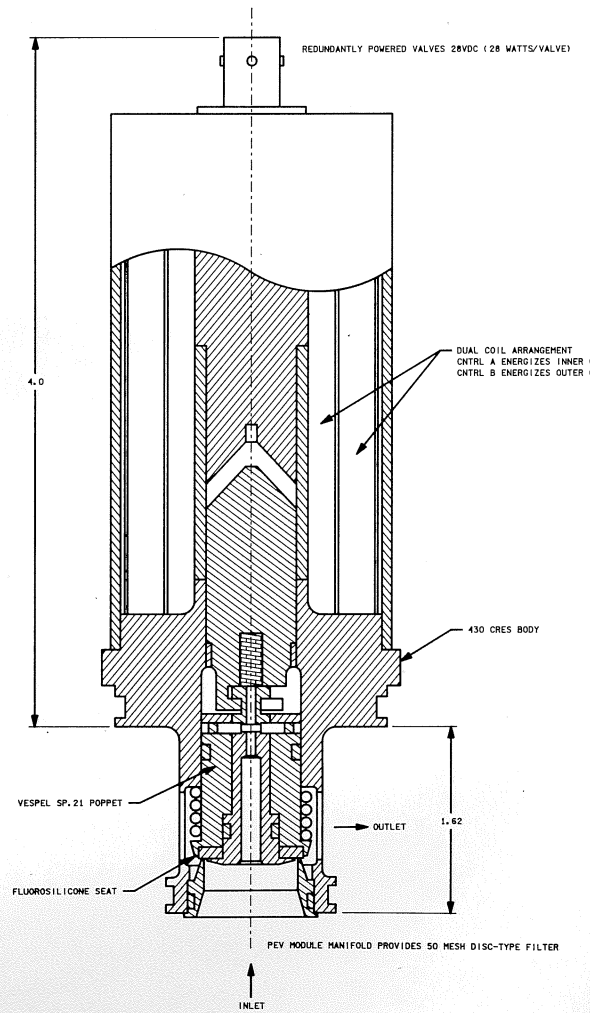

PRESSURE EQUALIZATION VALVE (PEV)

DATE: 11/19/91 | NAME: PSD | VERSION: INK: 4

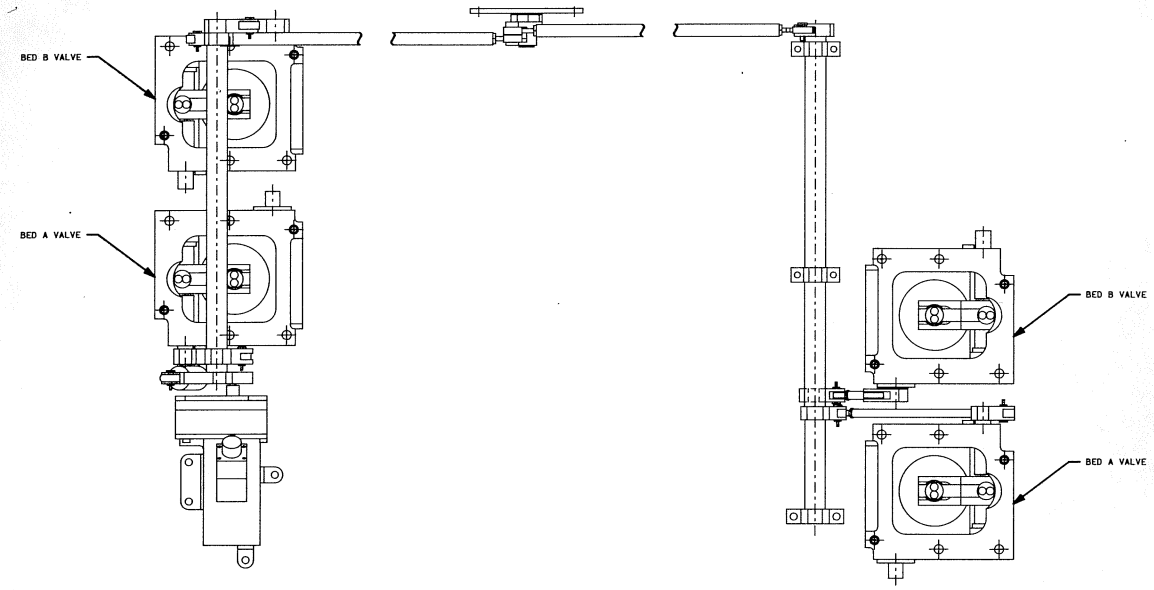

TOP VIEW
ACTUATOR A, DRIVES:
BED B VACUUM POPPETS
BED A AIR POPPETS

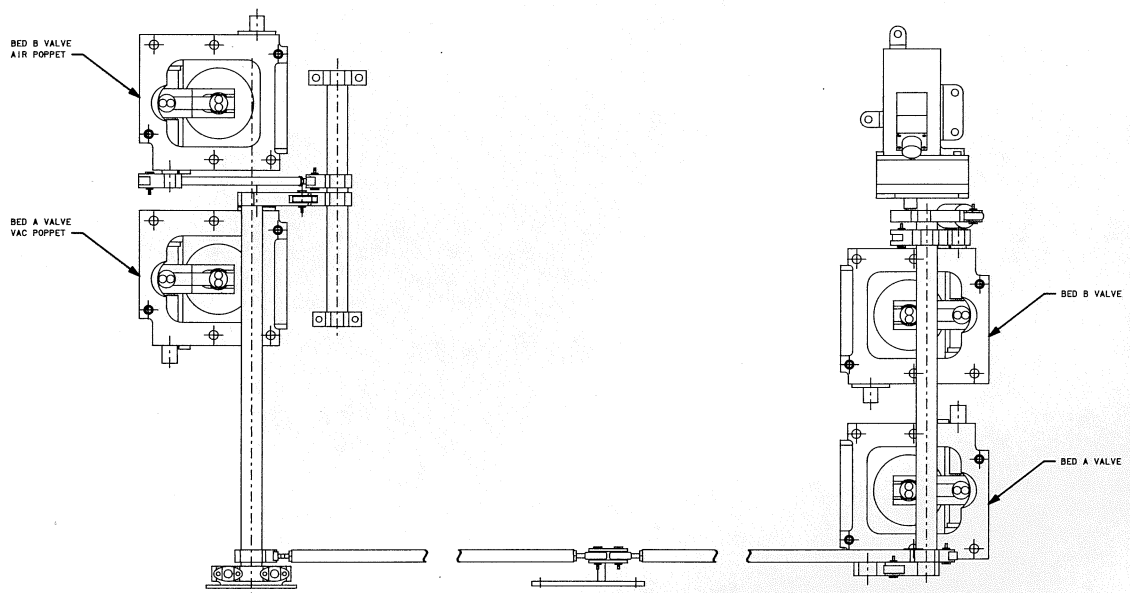

TOP VIEW
ACTUATOR B, DRIVES:
BED A VACUUM POPPETS
BED B AIR POPPETS

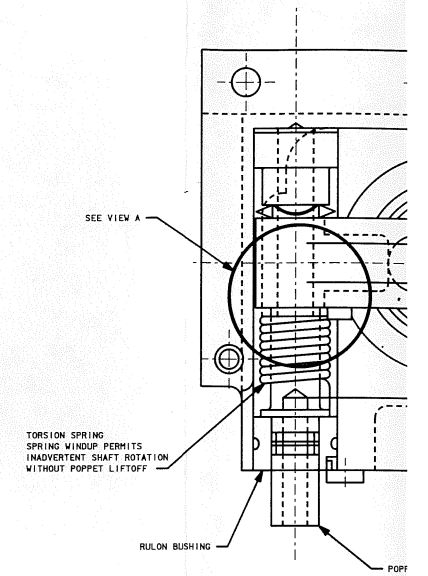

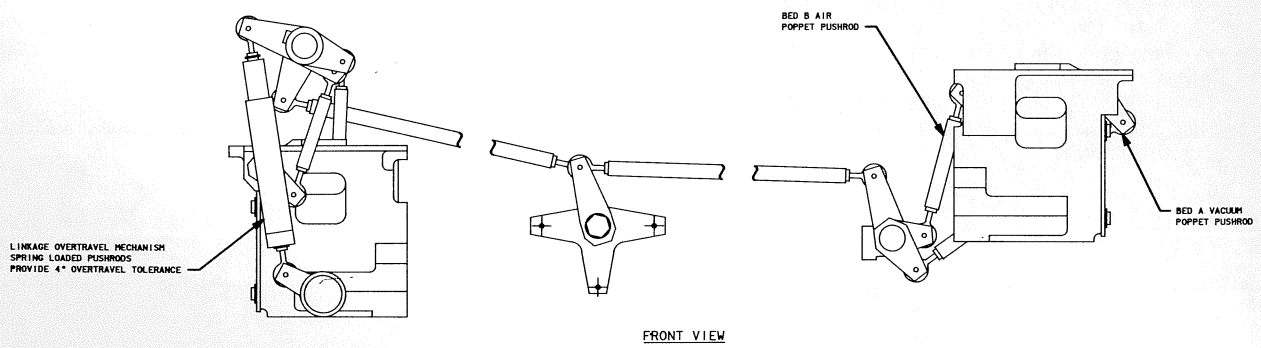

FRONT VIEW

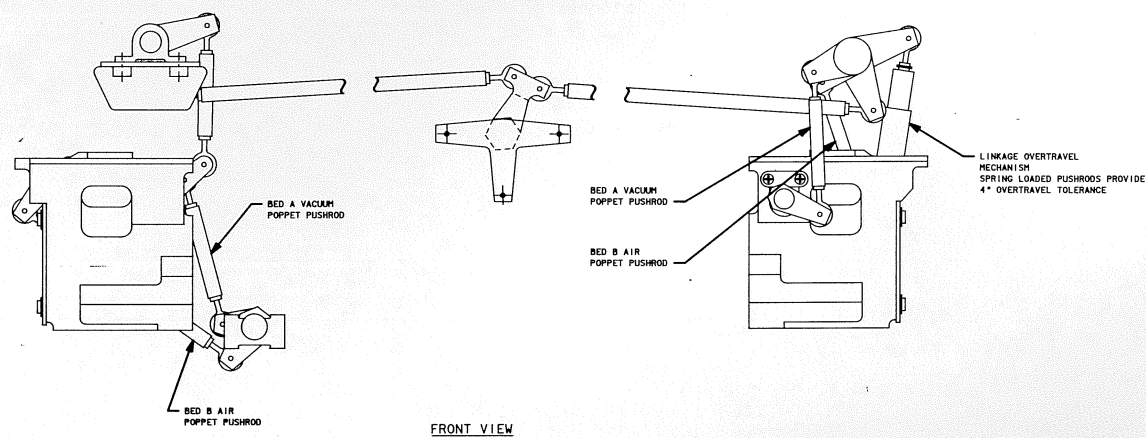

FRONT VIEW

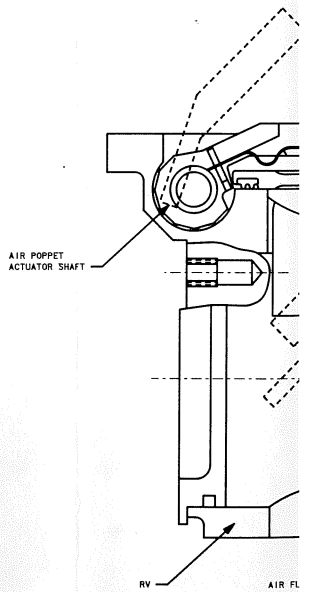

VACUUM

MECHANICAL LINKAGE

BASIC REV E-1

DATE:	NAME:	VERSION:
DATE: 05/25/93	NAME: VEM	VERSION: INR: 4
DATE: 08/18/93	NAME: BJB	VERSION: BPT: 6
DATE: 08/30/93	NAME: VEM	VERSION: INR: 5

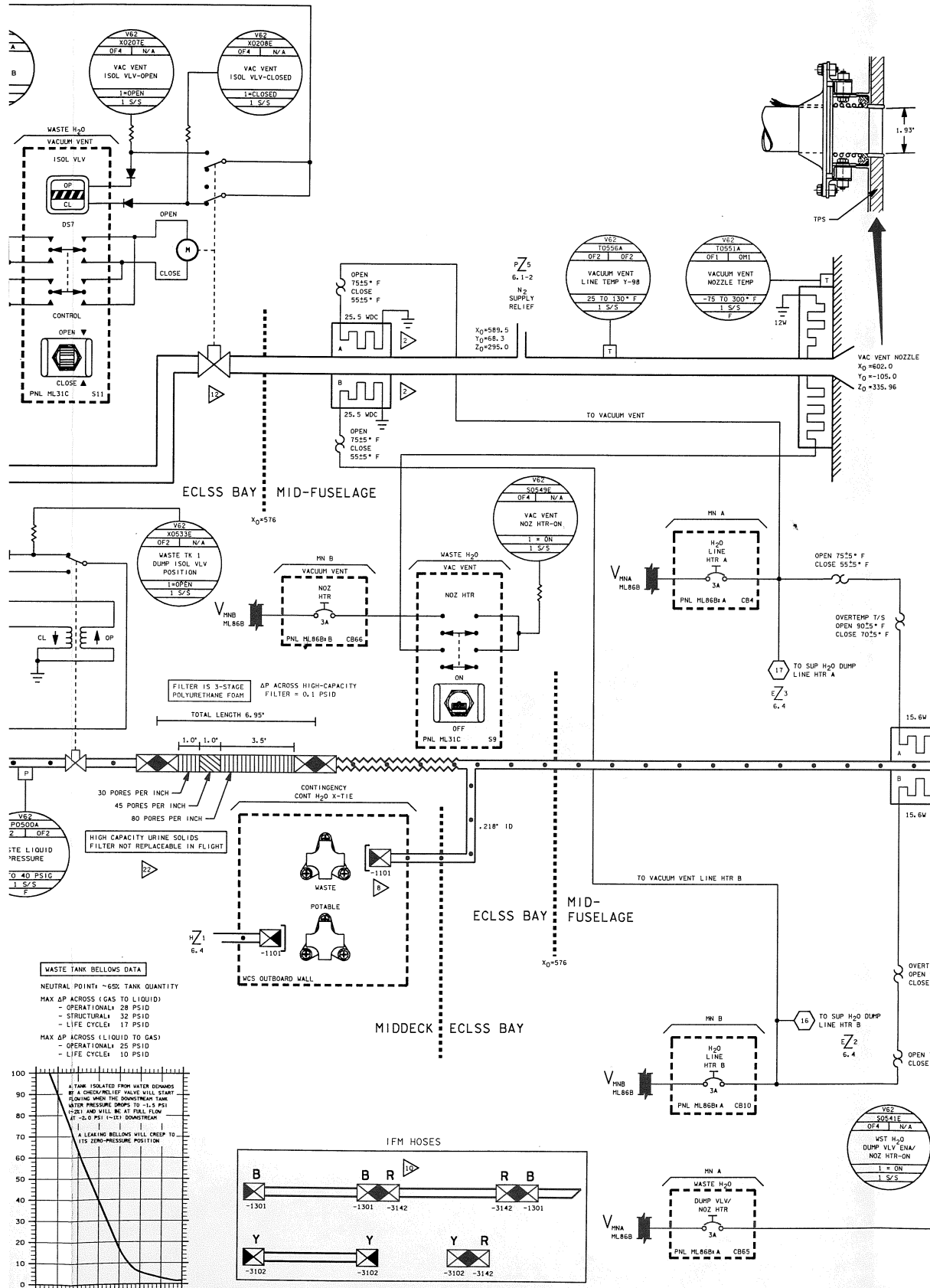

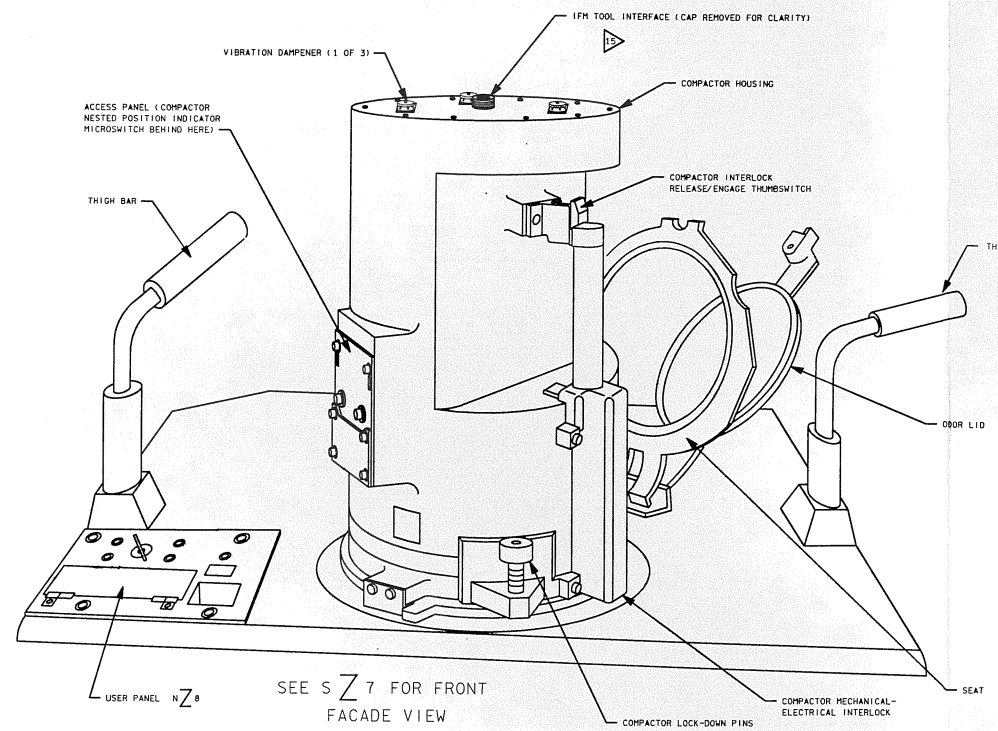

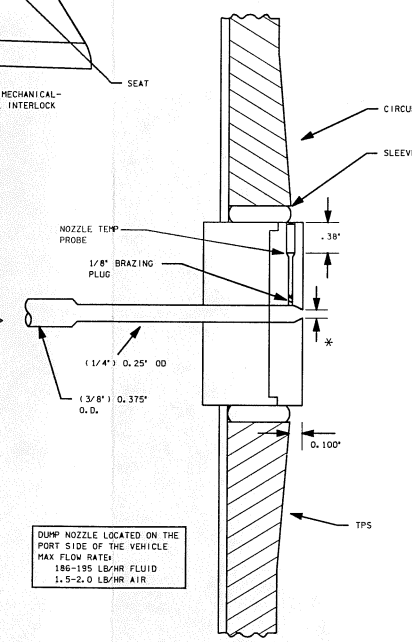

* ACTUAL NOZZLE DIAMETER (ALL VEH)

	OV-102	OV-103	OV-104	OV-105
WASTE DUMP NOZZLE	0.0565"	0.056"	0.0555"	0.06" (EST)

TYPICAL LOADING FOR 16 + 2 DAYS (7 PERSON)		
ITEMS	TOTAL	NO. TO BE STOWED
CANISTERS	8	4
CANISTER LIDS	5	5
LID DISPENSERS	10	2
BAG DISPENSERS	10	10
PREFILTERS	36	36
URINE G/B FILTERS	2	1
COMMODE G/B FILTERS	2	1
MALE FUNNELS	5	5
FEMALE FUNNELS	2	2
PLENUM FILTER	2	1

EDO WCS CONSUMABLES

1. PNL ML86B NOMENCLATURE

OV-105/104	WCS CNTLR (CB19 AND CB22)	5 AMPS
OV-103	CB 19 WCS CNTLR/SLINGER	5 AMPS
	CB 22 WCS CNTLR	3 AMPS
OV-102	CB 19 WCS CNTLR	5 AMPS
	CB 22 WCS CNTRL	5 AMPS

2. A SPARE URINE SOLIDS FILTER IS CARRIED EACH FLIGHT. IT IS NOT A REPLACEMENT FOR THE INSTALLED DUMP LINE FILTER. SPARE FILTER IS DESIGNED TO BE UTILIZED IN COMBINATION WITH THE IFM Y-Y HOSE (SEE 18), THROUGH THE CONTINGENCY CROSS-TIE WASTE O.D.
3. ELBOW FITTING FROM BAG INSIDE COMPARTMENT IS CONNECTED (FRICTION FIT) TO TYGON TUBING WHICH LEADS TO VAC VENT CONNECTION
4. VOL F WET TRASH COMPARTMENT LINE FITTING IS AN AN (ARMY-NAVY) TYPE
5. VACUUM VENT/WET TRASH ORIFICES ARE PART OF EACH WCS. ONLY THE EDO WCS HAS THIS LOWER FLOW RATE ORIFICE
6. ΔP TYPICALLY ~1.04" H_2O IN FLIGHT (STS-54) DATA AT 14.7 PSIA CABIN CONDITIONS
7. SEP SPEED TYPICALLY ~3650 RPM IN FLIGHT (STS-54) DATA
8. LIOH BOX MODIFIED TO HOLD NINE LIOH CANS PLUS WET TRASH STOWAGE, SCARRED ON OV-102, 104, 105. MISSION DEPENDENT CONFIGURATION
9. IFM TOOL (POWER SCREWDRIVER OR ROBBINS WRENCH, WITH 1/4" TO 3/8" ADAPTER) FITS HERE. SEVENTY-TWO TURNS REQUIRED FOR EITHER DOWNWARD (CW-COMPACT) OR UPWARD (CCW-RETRACT) PISTON MOTION
10. SERVICE CANISTER LED IS RESET AFTER CHANGEOUT BY RESET SWITCH UNDER WCS FACADE. THIS SWITCH ALSO FUNCTIONS AS THE USER PANEL FAULT LIGHT "PUSH TO TEST" SWITCH
11. UMS OPS - UDV MUST BE IN SEP 2 POSITION AND URINE SEL SW TO SEP 2. THE UMS ELECTRICAL CONNECTOR ON THE WCS USER PANEL WORKS IN TANDEM WITH SEP 2. THE UDV WILL PREVENT BACKFLOW THROUGH THE UNUSED SEPARATOR
12. VAC VENT ISOL VLV: ORIFICE IN VLV PLATE
    FLOW: 3.0±0.25 LBS/HR AT 14.7 PSIA INLET PRESSURE AND A DELTA P OF 6.7 PSID
    ORIFICE DIA: 0.0635 TO 0.0638 INCHES
    DISCHARGE COEFF.: (C_d): 0.8
    KSC TESTING: 4.37±0.36 LBS/HR AT 6.7 PSID
13. RESERVED
14. IFM HOSES
    - DIMENSIONS/MATERIAL
      BLUE/BLUE - 10 FT
      RED/RED - 10 FT
      YELLOW/YELLOW - 8 FT
      MATERIAL - TEFLON
      DIAMETER - 1/4 IN OD
    - FREE FLUID NOZZLE (NOT SHOWN) LENGTH ~~13 5/8"
    - STOWED IN CONTINGENCY HOSE AND CABLE KIT

    OD COMPATIBILITY

-1101	-3102
-1141	-3142
-1201	-3142, -3302
-1301	-3142, -3302

15. TRASH CAN AND HOSES INSTALLED DURING POST INSERTION AND STOWED DURING DEORBIT PREP
16. ALLOWS WASTE TANK TO BE SUPPLIED TO FES IN A CONTINGENCY BY CONNECTING WASTE H2O OD TO SUPPLY H2O OD. ALSO ALLOWS DUMP NOZZLES TO BE CROSS-TIED SEE (18), AND PERMITS CONTINGENCY WATER CONTAINER (CWC) TO BE USED IN THE EVENT OF A WASTE TANK LEAK
17. 1μ HYDROPHOBIC FILTER PRECLUDES WATER FROM EXITING TANK TO N_2 SUPPLY LINES IN EVENT OF BELLOWS LEAK, BUT WATER WILL BREAK THROUGH THE HYDROPHOBIC FILTER IF THE PRESSURE IS 5 PSID ACROSS IT
18. AIR OUTLET CABIN ODOR/BACTERIA FILTER CAN BE CHANGED IN FLIGHT (ONLY NECESSARY EVERY 30 DAYS) BUT ONLY ONE SPARE IS CARRIED ONBOARD. THE COMMODE AND URINAL FILTERS CANNNOT BE INTERCHANGED
19. NOMINAL COMPACTOR LOAD CURRENT ≃ 100 LBF
    COMPACTOR FAULT CURRENT ≃ 125 LBF
    IF FAULT LIGHT IS ON, THE READY TO COMPACT LED WILL REMAIN OFF
20. RESERVED
3. REFER TO TABLE 6.1 FOR DRAWING REFERENCES
21. THE A AND B (REDUNDANT) LINE HEATERS ARE CONTINUOUSLY WRAPPED TOGETHER THE FULL LENGTH OF THE LINE FROM X_D = 576

NOTES:
- WASTE WATER STORAGE TANK
  - USABLE CAPACITY: 165 LBS
  - LENGTH: 35.5 IN
  - DIAMETER: 15.5 IN
  - DRY WEIGHT: 39.5 LBS

* 13 EDO WMS

SIGNATURE		DATE	NATIONAL AERONAUTICS AND SPACE ADMINISTRATION LYNDON B. JOHNSON SPACE CENTER HOUSTON, TEXAS
DSGN	L. DUMIS	10/10/78	
DR			
ENGR	S. TRIPODI		EDO WASTE MANAGEMENT
ENGR		9/3/92	
APP		9-7-93	
APP			SPACE SHUTTLE
CADS	S.K. Cockerell	10-5-93	OV 105
LTR E	PCN 3		126.5 X 34

DWG NO 6.13
PAGE SHEET 1 OF 3

BASIC REV E-3

T | S | R | Q | P | O | N | M | L | K | J

SEE E Z 8 FOR TOP VIEW

EDO WCS FRONT VIEW

TAB

CANISTER RESET

RESET TEST

LED TEST

AIR DIVERTER VALVE

CAN

AIR WET TRASH

UMS INTFC

URINE DIVERTER VALVE

FOOT RESTRAINT

WCS VACUUM VALVE

OPEN

CLOSED

VACUUM VENT 80 VESTIPIPE

WASTE CANISTER

FOOT/TOE RESTRAINTS

MN A

WCS CNTLR

5A

PNL ML86B+B CB19

NOTE: CB RATING AND NOMENCLATURE ARE VEHICLE DEPENDENT. SEE

AC 1

WCS FAN SEP 1

3A

PNL MA73C+E CB47

PNL MA73C+E CB48

PNL MA73C+E CB49

MN B

PNL ML86B+B CB22

AC 2

WCS FAN SEP 2

PNL MA73C+E CB50

PNL MA73C+E CB51

PNL MA73C+E CB52

-28 VOLT DC POWER TO COMPACTOR MOTOR (MN-A OR MN-B)

WCS CONTROLLER (SEE DRAWING NO. 6.13-2 & 3)

USER PANEL Z6

URINAL

READY

FAULT

COMMODE

SERVICE CANISTER

READY TO COMPACT

FAULT

COMPACT

URINAL SEL SEP 1 / SEP 2

WCS PWR SEL AUTO 1 / OFF 1 / OFF 2 / AUTO 2 / MAN 1 / MAN 2

FAN PWR FAN 1 / AUTO / FAN 2

CAUTION

VERIFY CORRECT URINE DIVERTER VALVE CONFIGURATION PRIOR TO SELECTING ALTERNATE URINAL

USER PANEL IS LOCATED ON TOP OF WCS, ADJACENT TO COMMODE, ON SEATED USER'S RIGHT-HAND SIDE

NOTE: HINGED DOOR FOR SWITCH ACCESS - SHOWN IN 'OPEN' POSITION

WCS VACUUM VALVE

CLOSED

OPEN

PNL WCS

MIDDECK

ECLSS BAY

(EDO OV-102 AND OV-105 ONLY)

RCRS Z1 6.12-1

AIRLOCK VENT 1.93" ID

U7 6.4

H2 SEPARATOR OVERBOARD VENT .218" ID

H2 FLOW = 6 SCIM OR 10 SCCM

.944" ID

1.93" ID

LENGTH BETWEEN VACUUM VALVE AND VACUUM VENT ISOL VALVE IS 20 FEET 1.93" ID

MN A VAC VENT ISOL VLV 3A PNL ML86B+B CB67

MN B VAC VENT ISOL VLV 3A PNL ML86B+B CB68

V62 S0205E OF4 N/A VAC VENT ISOL VLV-MN A 1=MN A 1 S/S

V62 S0206E OF4 N/A VAC VENT ISOL VLV-MN B 1=MN B 1 S/S

V62 X0207E OF4 N/A VAC VENT ISOL VLV-OPEN 1=OPEN 1 S/S

V62 X0208E OF4 N/A VAC VENT ISOL VLV-CL 1=CLOSE 1 S/S

WASTE H2O VACUUM VENT ISOL VLV

BUS SELECT MN A MN B PNL ML31C S10

WASTE H2O VACUUM VENT ISOL VLV OP CL DS7 OPEN CLOSE

CONTROL OPEN CLOSE PNL ML31C S11

ECLSS BAY

VACUUM VENT 3 LB/HR AT 14.7 PSIA -1101 PNL WCS TP 126

2.2 LB/DAY AT 14.7 PSIA

LIOH BOX AUX WET TRASH

2.2 LB/DAY AT 14.7 PSIA

WMC WET TRASH 8 FT3 VOL. F

CABIN AIR

OUTBOARD (PORT) SIDE OF WMS COMPARTMENT

AUX WMC (WET TRASH) 3 FT3

CABIN AIR

FLUSH

ECLS H2O SYSTEM FWD FUSELAGE

ARS CONDENSATE

.218" ID

.343" ID

.343" ID

MODULE FLOW

20 X 20 MESH WITH .018 IN DIA WIRE

CAN

AUX WET TRASH

AIR DIVERTER VALVE S8

CAN FLOW

TRASH CAN

CABIN AIR

ALSO CALLED COFFEE CAN

NOTE: BOTH URINE FAN AND URINE SEP MOTORS ARE 120V DC BRUSHLESS

LABYRINTH SEAL FLUSH (GSE)

OUTER COVER SUMP DRAIN (GSE)

OPER RANGE: 2400-3830 RPM

.09 LB/SEC (MAX)

URINE SEPARATOR 1

URINE FAN 1

OPER RANGE: 10000-14250 RPM

AIR

15 CFM

URINE SEP 1 DRUM SPEED 0 TO 3900 RPM 1 S/S

URINE ODOR BACTERIA FILTER ΔP 0 - 5" H2O 1 S/S

MEASURES ΔP WITH AMBIENT

ODOR/BACTERIA FILTER

AIR OUT TO CABIN

1.0± 25 PSID

TP1

TP2

FROM H2O PRESSURIZATION MANIFOLD

0.25 IN

WASTE TANK 1

WASTE H2O DUMP ISOL VLV OP CL DS3 OPEN CLOSE PNL ML31C S3

MN A WASTE H2O DUMP ISOL 3A PNL ML86B+B CB17

V62 X0533E OF2 N/A WASTE TK 1 DUMP ISOL VLV POSITION 1=OPEN 1 S/S

FILTER IS 3-STAGE POLYURETHANE FOAM

TOTAL LENGTH 6.95"

1.0" 1.0" 3.5"

30 PORES PER INCH

45 PORES PER INCH

80 PORES PER INCH

HIGH CAPACITY URINE SOLIDS FILTER NOT REPLACEABLE IN FLIGHT

V62 P0500A OF2 OF2 WASTE LIQUID PRESSURE 0 TO 40 PSIG 1 S/S P

V62 X0570E OF1 N/A WASTE TK 1 INLET VALVE POSITION 1=OPEN 1 S/S

WASTE H2O TANK 1 VLV OP CL DS2 OPEN CLOSE PNL ML31C S2

MN A WASTE H2O TK 1 VALVE 3A PNL ML86B+B CB16

V62 Q0540A OF1 OF1 WASTE WATER TANK QUANTITY 0 TO 100 PCT 1 S/S P

WASTE TANK BELLOWS DATA

NEUTRAL POINT: ~65% TANK QUANTITY

MAX ΔP ACROSS (GAS TO LIQUID)
- OPERATIONAL: 28 PSID
- STRUCTURAL: 32 PSID
- LIFE CYCLES: 17 PSID

MAX ΔP ACROSS (LIQUID TO GAS)
- OPERATIONAL: 25 PSID
- LIFE CYCLES: 10 PSID

WATER TANK QUANTITY, PERCENT

WATER PRESSURE, PSI

A TANK ISOLATED FROM WATER DEMANDS BY A CHECK/RELIEF VALVE WILL START FLOWING WHEN THE DOWNSTREAM TANK WATER PRESSURE DROPS TO -1.5 PSI (-21) AND WILL BE AT FULL FLOW AT -2.0 PSI (-31) DOWNSTREAM

A LEAKING BELLOWS WILL CREEP TO ITS ZERO-PRESSURE POSITION

WATER TANK BELLOWS EFFECT ON WATER PRESSURE

WASTE H2O DUMP ISOL VLV OP CL DS1 OPEN CLOSE PNL ML31C S1

MN B WASTE H2O TK 1 DRAIN 3A PNL ML86B+B CB23

V62 X0566E OF2 N/A WASTE TK 1 DRAIN VALVE POSITION 1=OPEN 1 S/S

WASTE H2O TK 1 DRAIN VLV OP CL DS1 OPEN CLOSE PNL ML31C S1

ECLS H2O SYSTEM FWD FUSELAGE G-13

GSE DRAIN

FROM H2O PRESSURIZATION MANIFOLD

Z6 6.13-3 AC 1 POWER TO COMMODE FAN 1

MEASURES ΔP WITH AMBIENT (NOMINAL ΔP ~ 2.0" H2O, STS-54 DATA)

V62 P0723A OF2 COMMODE ODOR BACTERIA FILTER ΔP 0 - 5" H2O 1 S/S

COMMODE FAN 1 (AC1, 3Ø, 115 VAC, 400 HZ)

ΔP=0.11 IN. H2O

AIR

24 CFM AIR

ODOR/BACTERIA FILTER

AIR OUT TO CABIN

ΔP=0.11 IN. H2O

COMMODE FAN 2 (AC2, 3Ø, 115 VAC, 400 HZ)

OPER RANGE: 9000-10500 RPM

N8 6.13-2

N4 6.13-2

22 X 22 MESH FILTER WITH .0075 IN DIA WIRE. FILTER IS REMOVEABLE IN FLIGHT

URINAL HOSE POSITION SENSOR (PIT)

7/8" ID

10 CFM AIR (MIN)

URINE FLOW RATES: 0.05 LBS/SEC (NOMINAL) 0.088 LBS/SEC (MAX)

URINE DIVERTER VALVE (UDV) (MANUAL VALVE)

URINE MONITORING SYSTEM

EMU DRAIN S3 6.3-1

URINE FAN 2

OPER RANGE: 10000-14250 RPM

LABYRINTH SEAL FLUSH (GSE)

OUTER COVER SUMP DRAIN (GSE)

OPER RANGE: 2400-3830 RPM

.09 LB/SEC (MAX)

URINE SEPARATOR 2

URINE SEP 2 DRUM SPEED 0 TO 3900 RPM 1 S/S

1.0± 25 PSID

TP2

1.0± 25 PSID

FROM H2O PRESSURIZATION MANIFOLD

Z3 6.4

B -1301

Y -3102

DATE: 08/30/93 | NAME: VEM | VERSION: INK+S

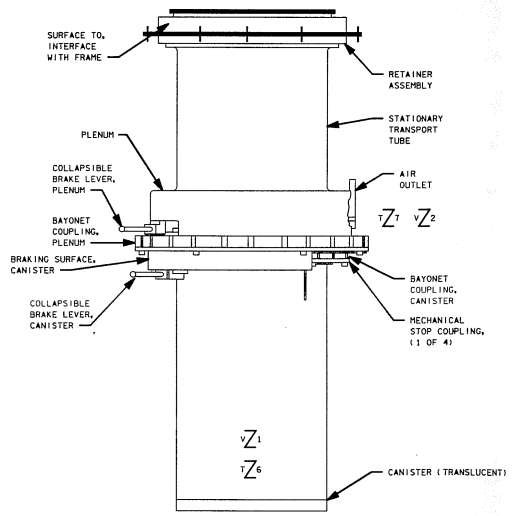

TRANSPORT TUBE ASSEMBLY

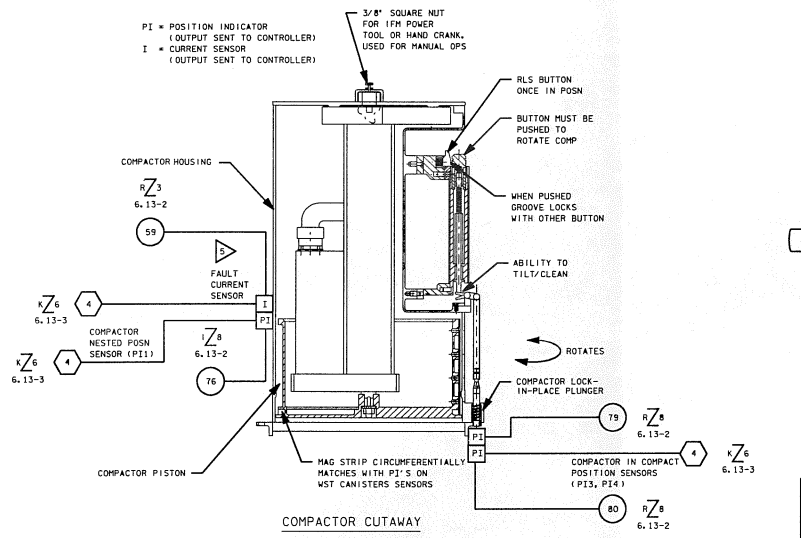

COMPACTOR CUTAWAY

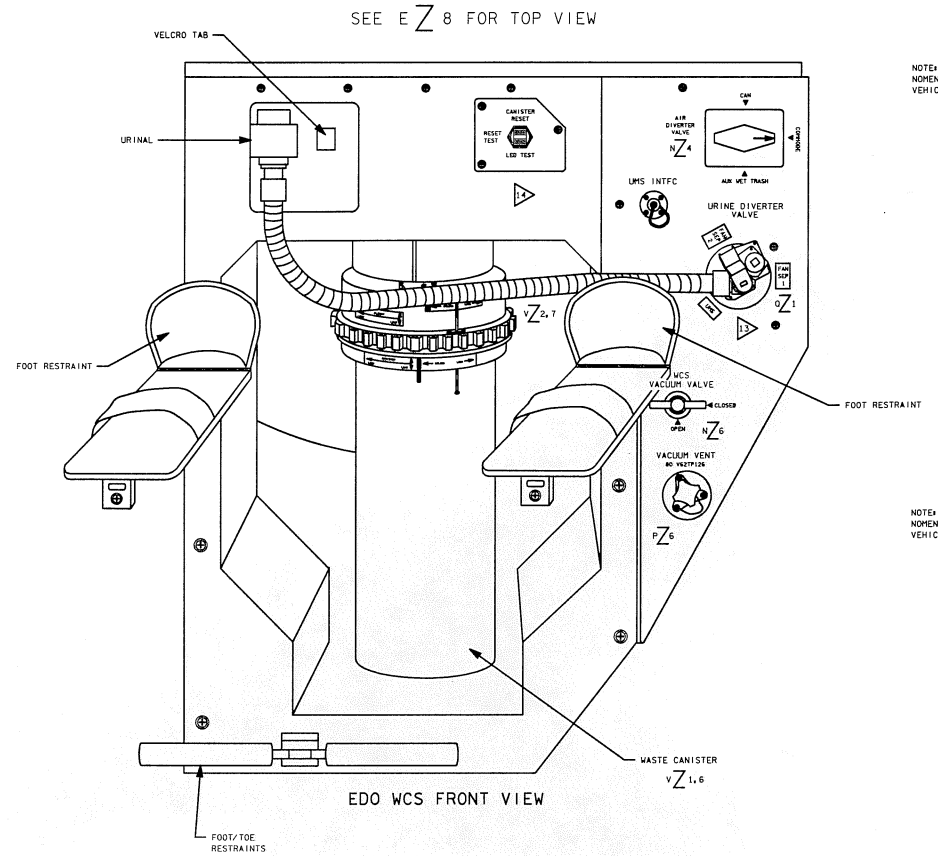

EDO WCS FRONT VIEW

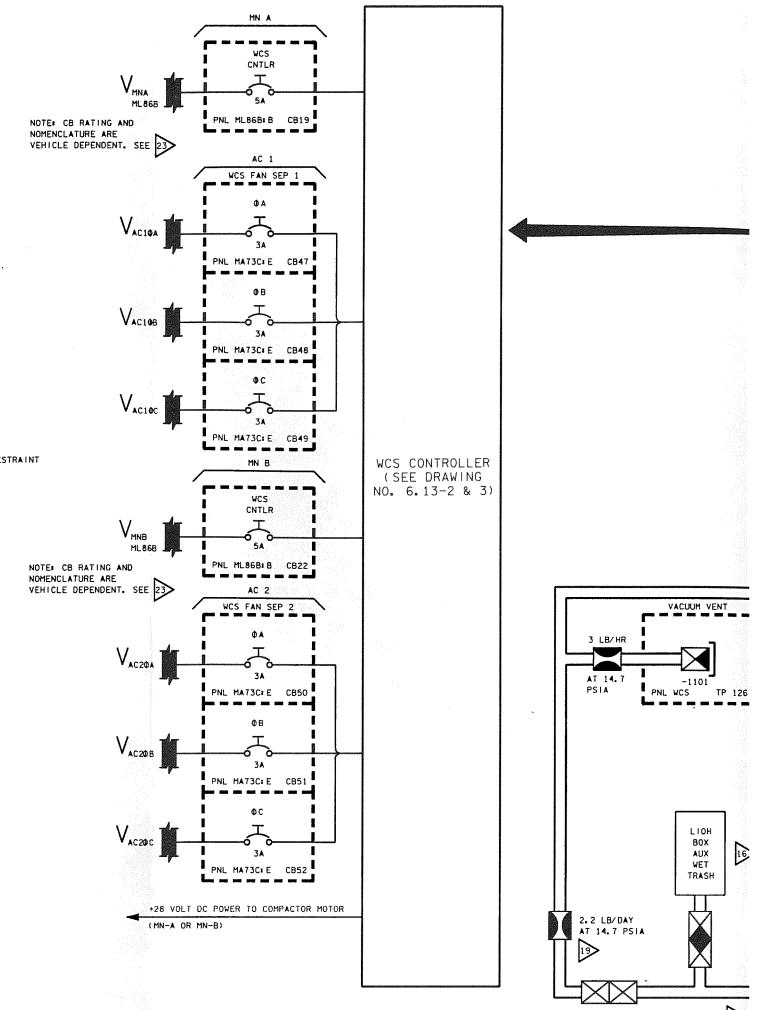

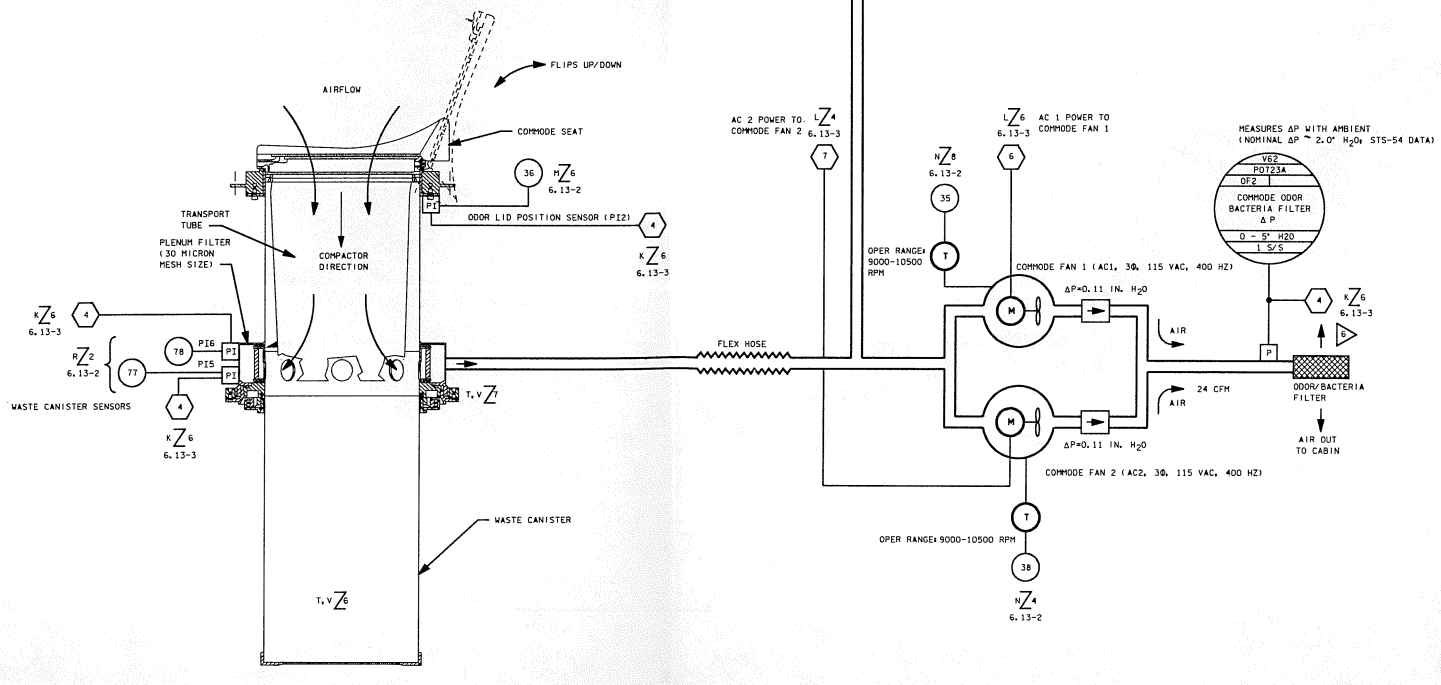

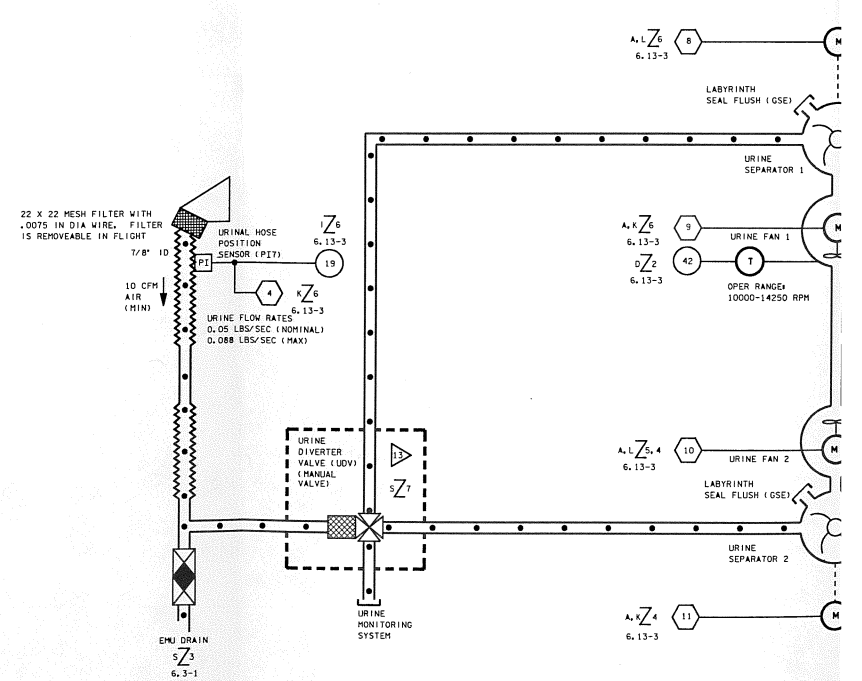

BASIC REV E-3

DATE: 08/31/93	NAME: VSH	VERSION: BPT.4
DATE: 09/27/93	NAME: MDU	VERSION: INK.1
DATE: 10/07/93	NAME: MDU	VERSION: INK.2

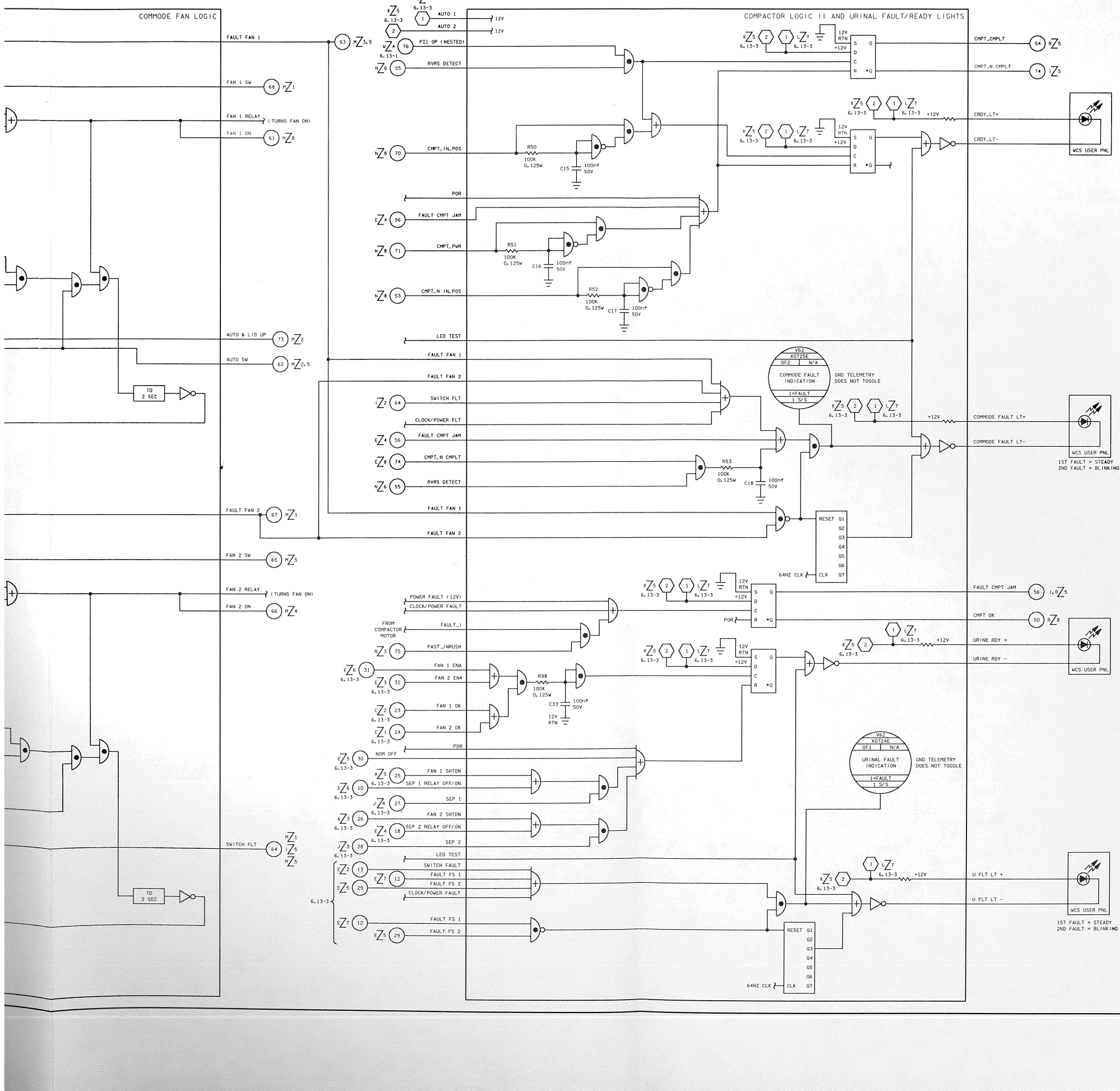

EDO WCS OPERATIONS

COMMODE OPS

NOMINAL:

AUTO OPS- COMMODE FAN 1 (CF1) OR COMMODE FAN 2 (CF2) WILL IMMEDIATELY START WHEN COMMODE DOOR LID/SEAT (CS) IS LIFTED UP. STANDARD SWITCH CONFIG: WCS PWR SEL SW POSITIONS AUTO 1, OFF, & FAN PWR SW IN AUTO- CF1 WILL TURN ON. IF OFF 1, AUTO 2, AUTO- CF2 WILL TURN ON. SIMULTANEOUSLY, A 15-SEC FDA TIME DELAY (TD) WILL BE INITIATED, GIVING CF (:2) TIME TO REACH OPERATING RPM OF 10500 (NO LOWER THAN 9000 RPM). COMMODE OPS CAN COMMENCE AT TIME IF NO FAULTS ARE DETECTED. WHEN COMMODE OPS COMPLETE, THE CS IS PUT DOWN AND CF1(2) WILL SHUT ITSELF DOWN AFTER ANOTHER TD OF 15 SECONDS (ALLOWS THE FDA TO RESET SO NO FAULT IS 'DETECTED' WHILE CF (:2) SLOWS DOWN).

OFF-NOMINAL:

IF CF (:2) NOT UP TO PROPER RPM'S BY T+15 SEC, COMMODE FAULT INDICATION (V62X07256, 1 = FAULT) WILL OCCUR, RED COMMODE FAULT LED WILL ILLUMINATE ON THE EDO WCS USER PANEL, AUTOMATICALLY AND SIMULTANEOUSLY, CF (:2) WILL SHUTDOWN AND CF 2(:1) WILL TURN ON. THE COMMODE FAULT LED WILL STAY LIT STEADILY (EVEN AFTER THE SECOND FAN COMES ON), CONTINUE NORMAL AUTO OPS (SEE RESET BELOW). A SECOND FAULT (E.G., THE SECOND FAN COMES ON BUT DOES NOT ATTAIN PROPER SPEED) CAUSES COMMODE FAULT LED TO BLINK, THE SECOND FAN WILL BE DISABLED. NO AUTO OPS WILL BE POSSIBLE- MANUAL MUST BE USED.

RESET FAULT INDICATIONS- CYCLE APPROPRIATE WCS PWR SEL SW OR WCS CNTLR CB. (E.G., IF WCS PWR SEL SW- AUTO 1, CYCLE FROM AUTO 1 TO OFF 1 TO AUTO 1. THEN GO TO MAN 1 FOR MANUAL OPS. OR, CYCLE ML86B(B MNA(MNB) WCS CNTLR CB).

MANUAL:

MANUAL OPS IS ONLY USED FOR 2 DETECTED CF FAILURES, CONTROLLER FAILURE, OR CABIN CLEANUP APPLICATIONS.

NO FDA (FAULT LED'S OR MSID'S) SEEN IF EITHER WCS PWR SEL SW IS IN ITS RESPECTIVE MANUAL POSITION (MAN 1 OR MAN 2). HOWEVER, MANUAL CF OPS ARE POSSIBLE WHILE MAINTAINING FDA ANNUNCIATION IF FAN PWR SW IN FAN (:2) WHILE WCS PWR SEL SW IN AUTO (:2).

MANUAL CF USING WCS LOGIC AND FAN PWR SWITCH (AIR FLOW THROUGH AUX WET TRASH FOR CABIN CLEANUP)- LID IS DOWN. FAN PWR SW TO FAN (:2)- CF (:2) GOES ON (IF NO PREVIOUS FAULTS) AND FDA TD(:15 SEC INITIATED. CF (:2) ATTAINS PROPER SPEED, FDA ENABLED. TO TURN FAN OFF, FAN PWR SW TO AUTO- CF (:2) WILL TURN OFF SINCE PI2 INDICATES LID IS CLOSED. IF PI2 FAILS TO INDICATE CLOSURE, CF CAN BE TURNED OFF BY PUTTING WCS PWR SEL SW TO OFF (:1) (IF CF (:1) OR OFF 2 (IF CF 2).

POWERED MANUAL COMMODE OPS (TWO DETECTED CF FAILURES OR CONTROLLER FAILURE)- WCS PWR SEL SW TO MAN (:2), CF (:2)- ON (NOTE: RESPECTIVE URINE FAN AND SEP ALSO POWERED OR DEPOWERED WHEN IN MAN 1 OR 2). COMMODE USE NOW POSSIBLE. WHEN OPS COMPLETE, WCS PWR SEL SW OFF (:2), CF (:2)- OFF.

COMPACTOR OPS

NOMINAL:

CS UP AND COMPACTOR ROTATED INTO POSITION. IF PROPER POSITION, PI3 AND PI4 WILL MAKE CONTACT (ACTIVATED BY MECHANICAL PIN-INTERLOCK MECHANISM)- GREEN READY TO COMPACT LED IS LIT. COMPACT BUTTON PUSHED (IF COMPACTOR NOT IN CORRECT POSITION, OR IF PI3 OR PI4 HAVE FAILED, PUSHING THIS BUTTON WILL HAVE NO EFFECT); COMPACTION CYCLE BEGINS. WHEN COMPACTOR COMPLETELY DOWN IN CANISTER, READY TO COMPACT LED GOES OFF. COMPACTOR REVERSES DIRECTION BACK UP AND TURNS OFF. THIS TRIPS PI1 ('COMPACTOR FULLY NESTED'), INDICATING THE COMPACTOR IS FULLY STOPPED AND IN THE CORRECT POSITION. READY TO COMPACT LED WILL LIGHT AGAIN. THE COMPACTOR IS ROTATED BACK TO ITS STORAGE POSITION. THE READY TO COMPACT LED IS EXTINGUISHED AUTOMATICALLY, AND THE CS IS CLOSED.

CANISTER ULLAGE INDICATED BY PI5 OR PI6 (30 USES PER CANISTER). IF ONLY ONE DAY ULLAGE (7 USES) IS LEFT (PI5), YELLOW 'SERVICE CANISTER' LED ON THE USER PANEL WILL BE LIT AND STEADY. THE 'CANISTER- ONE DAY LEFT' MSID WILL BE DOWNLINKED (V62X07256, 1 = ONE DAY LEFT). WHEN ONLY ONE USE LEFT (PI6), PI6 WILL BE TRIPPED- THE 'SERVICE CANISTER' LED WILL BLINK. CANISTER IS THEN GOOD FOR ONE MORE USE BEFORE CHANGEOUT. AFTER CHANGEOUT, RESET 'SERVICE CANISTER' LED USING SWITCH ON WCS FACADE (NOTE: THIS SWITCH IS ALSO THE 'PUSH-TO-TEST' SWITCH FOR USER PANEL FAULT LIGHTS).

OFF-NOMINAL:

IF COMPACTOR FAILURE IS DUE TO JAMMING (COMPACT OR RETRACT CYCLE), A 'FAULT CURRENT' WILL BE GENERATED ('FAULT CURRENT' IS EQUIVALENT TO COMPACTOR FORCE EXCEEDING 125 LBF). THE 'COMMODE FAULT INDICATION' (V62X07256, 1 = FAULT) WILL BE DOWNLINKED, THE RED 'COMMODE FAULT' LED WILL BE LIT STEADILY, 'READY TO COMPACT' LED WILL GO OUT.

RESET FAULT INDICATIONS- CYCLE APPROPRIATE WCS PWR SEL SW OR WCS CNTLR CB. (E.G., IF WCS PWR SEL SW- AUTO 1, CYCLE FROM AUTO 1 TO OFF 1 TO AUTO 1. OR, CYCLE ML86B(B MNA(MNB) WCS CNTLR CB).

MANUAL:

MANUAL COMPACTOR OPS ONLY POSSIBLE THROUGH IFM PROCEDURES.

URINAL OPS

NOMINAL:

NORMAL CONFIG FOR URINAL SEL SW IS SEP 1 (PROCESS BELOW IS ESSENTIALLY IDENTICAL IF IN SEP 2 POSITION). WHEN URINAL HOSE (UH) UNSTOWED PI7, SIMULTANEOUSLY AND AUTOMATICALLY AN FDA TD OF 15 SEC IS INITATED AND POWER IS SENT TO TURN ON URINE SEPARATOR (:2). FOUR TO FIVE SECONDS LATER, URINE FAN (:2) IS TURNED ON. IF NO PROBLEM WITH EITHER UNIT BY T+15 SEC, GREEN URINAL READY LED WILL BE STEADILY LIT, URINAL OPS CAN COMMENCE. WHEN THE CREWPERSON IS DONE, UH IS STOWED (PI7), ACTIVATING TWO SEQUENTIAL TIME DELAYS. FIRST, AFTER 60 SEC, THE URINE FAN IS TURNED OFF. FORTY SECONDS AFTER THIS, THE URINE SEP GOES OFF (TD'S ALLOW FOR ADEQUATE CLEARING OF LIQUID FROM THE SYSTEM).

IF UH LIFTED BEFORE 60 SEC TD, URINE FAN AND SEP WILL CONTINUE RUNNING. URINAL READY LED ACTIVATES. IF UH LIFTED AFTER 60 SEC TD, SEP KEEPS RUNNING AND FAN STARTS AGAIN. URINAL READY LED ON AFTER FAN ATTAINS GOOD SPEED. IF UH LIFTED AFTER 100 SEC, URINAL USE CYCLE STARTS FROM BEGINNING.

OFF-NOMINAL:

IF PROPER RPM'S NOT REACHED ON EITHER OR BOTH OF THE FANS (MUST BE >10000# NOMINAL = 14250) OR SEPARATOR (MUST BE >2400, NOMINAL = 3830), RED 'URINE FAULT' LIGHT WILL BE LIT- STEADY FOR ONE FAULT, BLINKING FOR TWO OR MORE. ALSO, 'URINAL FAULT INDICATION' MSID (V62X07248, 1 = FAULT) WILL BE DOWNLINKED. BOTH FAN AND SEPARATOR WILL SHUT OFF. LOGIC-CONTROLLED URINAL OPS CAN ONLY CONTINUE BY CONFIGURING TO THE ALTERNATE SYSTEM. TO RESET FAULT INDICATIONS-CYCLE APPROPRIATE WCS PWR SEL SW OR WCS CNTLR CB. (E.G., IF WCS PWR SEL SW- AUTO 1, CYCLE FROM AUTO 1 TO OFF 1 TO AUTO 1. THEN GO TO MAN 1 FOR MANUAL OPS. OR, CYCLE ML86B(B MNA(MNB) WCS CNTLR CB).

MANUAL:

MANUAL ONLY USED FOR 2 DETECTED URINE FAN/SEP FAILURES OR A CONTROLLER FAILURE. MANUAL BYPASS WORKS WITHOUT UH 'STOWED' OR 'UNSTOWED' INDICATIONS (PI7).

NO FDA (FAULT LED'S OR MSID'S) SEEN IF EITHER WCS PWR SEL SW IS IN ITS RESPECTIVE MANUAL POSITION (MAN 1 OR MAN 2). FAULT LOGIC IS NOT IN EFFECT.

POWERED MANUAL URINAL OPS- WCS PWR SEL SW TO MAN (:2) (URINAL SEL SW POSITION MAKES NO DIFFERENCE): URINE FAN (:2)/SEP (:2) ACTIVATE- URINAL OPS CAN COMMENCE. (NOTE: RESPECTIVE CF ALSO POWERED OR DEPOWERED WHEN IN MAN 1 OR 2). WHEN COMPLETE, WCS PWR SEL SW TO OFF (:2), URINE FAN/SEP (:2)- OFF, NOTE: TD'S WITHIN FAULT LOGIC NOT IN EFFECT WHEN FAN/SEP TURNED OFF IN MANUAL OPS.

3. NOMINAL COMPACTOR LOGIC SEQUENCE
   - A. COMPACTOR IS PUT IN POSITION: PI3 AND PI4 = 1 (RZ8)
   - B. COMPACTOR READY LIGHT FLASHES (EZ7)
   - C. THE COMPACTOR BUTTON IS DEPRESSED (:27): THIS CLOCKS THE THREE COMPACTOR MOTOR FLIP-FLOPS (OZ7). THESE SEND THE POWER (28V) AND DIRECTION (DOWN/UP) TO THE COMPACTOR MOTOR (:024). THIS CLOCK SIGNAL STOPS WHEN THE COMPACTOR BUTTON IS RELEASED
   - D. A 2 SECOND DELAY (PZ3) ALLOWS THE STARTUP CURRENT TO PASS AND NOT GENERATE A FAULT OR THE 100LB LOAD SIGNAL
   - E. THE COMPACTOR PROCEEDS DOWNWARD UNTIL THE CURRENT COMPARATOR (OZ3) DETECTS A LOAD > 100LB
   - F. WHEN THE COMPACTOR IS AT FULL EXTENSION (RECEIVING THE 100LB LOAD SIGNAL) IT REVERSES ITS DIRECTION. THIS IS ACCOMPLISHED BY THE CMPT_EXTEND (NZ6) SIGNAL RESETTING THE CMPT_ON FLIP-FLOP (OZ7) WHICH CONTROLS THE POWER TO THE COMPACTOR. ONCE THE POWER IS REMOVED THE 100LB LOAD SIGNAL CEASES
   - G. THE "Q OUPUT OF THE SAME FLIP-FLOP, RETRACT (NZ5), STARTS A 2 SEC TIME DELAY (OZ6) WHICH, AFTER TWO SECONDS CLOCKS THE FLIP-FLOP (PZ6) WHICH CLOCKS THE CMPT_ON FLIP-FLOP AND RESETS THE CMPT_DIRECTION FLIP-FLOP. THIS RESTORES POWER AND REVERSES THE DIRECTION OF THE COMPACTOR. THE SIGNAL FROM THE RETRACT FLIP-FLOP (PZ7) REMAINS HIGH TO END THE COMPACTOR SEQUENCE WHEN THE COMPACTOR RETURNS TO HOME POSITION
   - H. ONCE THE COMPACTOR RETURNS TO THE HOME POSITION ANOTHER 100LB LOAD SIGNAL IS GENERATED (RZ6) WHICH IN CONJUNCTION WITH THE OUTPUT OF THE RETRACT FLIP-FLOP CLOCKS THE RVRS_DETECT FLIP-FLOP (PZ6). THE RVRS DETECT SIGNAL (RZ5) RESETS THE THREE FLIP-FLOPS THAT CONTROL POWER AND DIRECTION (OZ7) THEREBY ENDING THE COMPACTOR SEQUENCE

     IF THE SECOND 100LB LOAD DETECT (RZ6) IS NOT ACCOMPANIED BY A CMPT CMPLT SIGNAL (RZ5), A COMMODE FAULT WILL BE GENERATED (EZ5)

2. COMPACTOR LIGHTS (ONE DAY, ONE USE LEFT)
   - A. WHEN THE COMPACTOR TRAVERSES DOWN THE TUBE, BEFORE THE CANNISTER HAS REACHED THE ONE DAY LEFT OR ONE USE LEFT CAPACITY, IT CLOSES PI'S 5 AND 6 WHICH ARE ONE USE LEFT AND ONE DAY LEFT RESPECTIVELY (RZ2) WHICH CLOCK TWO RESPECTIVE FLIP-FLOPS (PZ2) BRINGING THE "Q OUTPUTS TO 0. THESE OUTPUTS INHIBIT THE SIGNAL THAT WOULD ILLUMINATE THE CANISTER SERVICE LIGHT (NZ2)
   - B. WHEN THE COMPACTOR HAS REACHED FULL COMPACTION (100LB LOAD, RZ5) THE CMPT_EXTEND (NZ6) IS GENERATED WHICH SENDS ITS INPUT (RZ1) INTO THE TWO AND GATES (PZ1) WHICH WILL CLOCK THE NEXT SET OF FLIP-FLOPS (PZ1) WHEN THE PI'S REMAIN OPEN. UNTIL THE PI'S REMAIN OPEN, HOWEVER, THE OTHER INPUTS TO THOSE AND GATES ARE 0 WHICH INHIBITS THE OUTPUT OF THE GATES
   - C. WHEN THE COMPACTOR IS SUFFICIENTLY FULL THAT THE FIRST PI5 IS NOT CONTACTED, IT DOES NOT GENERATE A SIGNAL, SO THE FIRST FLIP-FLOP (PZ2) IS NOT CLOCKED. THIS MEANS THAT THE "Q OUTPUT WILL REMAIN A ONE BECAUSE IT WAS PREVIOUSLY RESET WITH THE RVRS DETECT_SIGNAL (RZ1)

     THIS ALLOWS THE CMPT EXTEND (RZ1) SIGNAL TO PROPOGATE TO THE CLOCK INPUT OF THE ONE DAY LEFT FLIP-FLOP (OZ2)
   - D. WHEN THE ONE DAY LEFT FLIP-FLOP IS CLOCKED, ITS Q OUTPUT GOES THROUGH AN INVERTER WHICH ALLOWS THE CURRENT TO FLOW THROUGH THE LIGHT (NZ2) TO THE LOW SIGNAL
   - E. WHEN THE COMPACTOR FILLS ABOVE THE ONE USE LEFT LEVEL, PI6, A SIMILAR PROCESS TAKES PLACE WITH ONE EXCEPTION. THE OUTPUT OF THE ONE USE LEFT FLIP-FLOP (OZ2) GOES INTO A CLOCK WHICH PULSES THE INPUT TO THE INVERTER, THEREBY PRODUCING THE PULSING LIGHT

NOTES: 1. SR FLIP-FLOP WITH DATA TRUTH TABLE

S	R	C	D	Q
1	0	X	X	1
0	1	X	X	0
0	0	X	X	UNSTABLE
0	0	1	0	1
0	0	1	1	0
0	0	0	*	LAST VALUE
1	1	X	X	NOT ALLOWED

* 13 EDO WMS 2

SIGNATURE		DATE	NATIONAL AERONAUTICS AND SPACE ADMINISTRATION LYNDON B. JOHNSON SPACE CENTER HOUSTON, TEXAS	
DSGN	CONNIE RILEY	10/26/93		
OR	S. EGAN-WYER	1/4/93		
ENGR	M. FITZPATRICK		EDO WASTE MANAGEMENT	
ENGR	M.S. Fitzpatrick	9/23/93		
APP	Linda Kohn	10/5/93		
APP			SPACE SHUTTLE	DWG NO 6.13
CADS	K. Kimbrell	10.8.93	OV 105	
LTR E	PCN 3		121 X 34	PAGE SHEET 2 OF 3

BASIC REV E-3

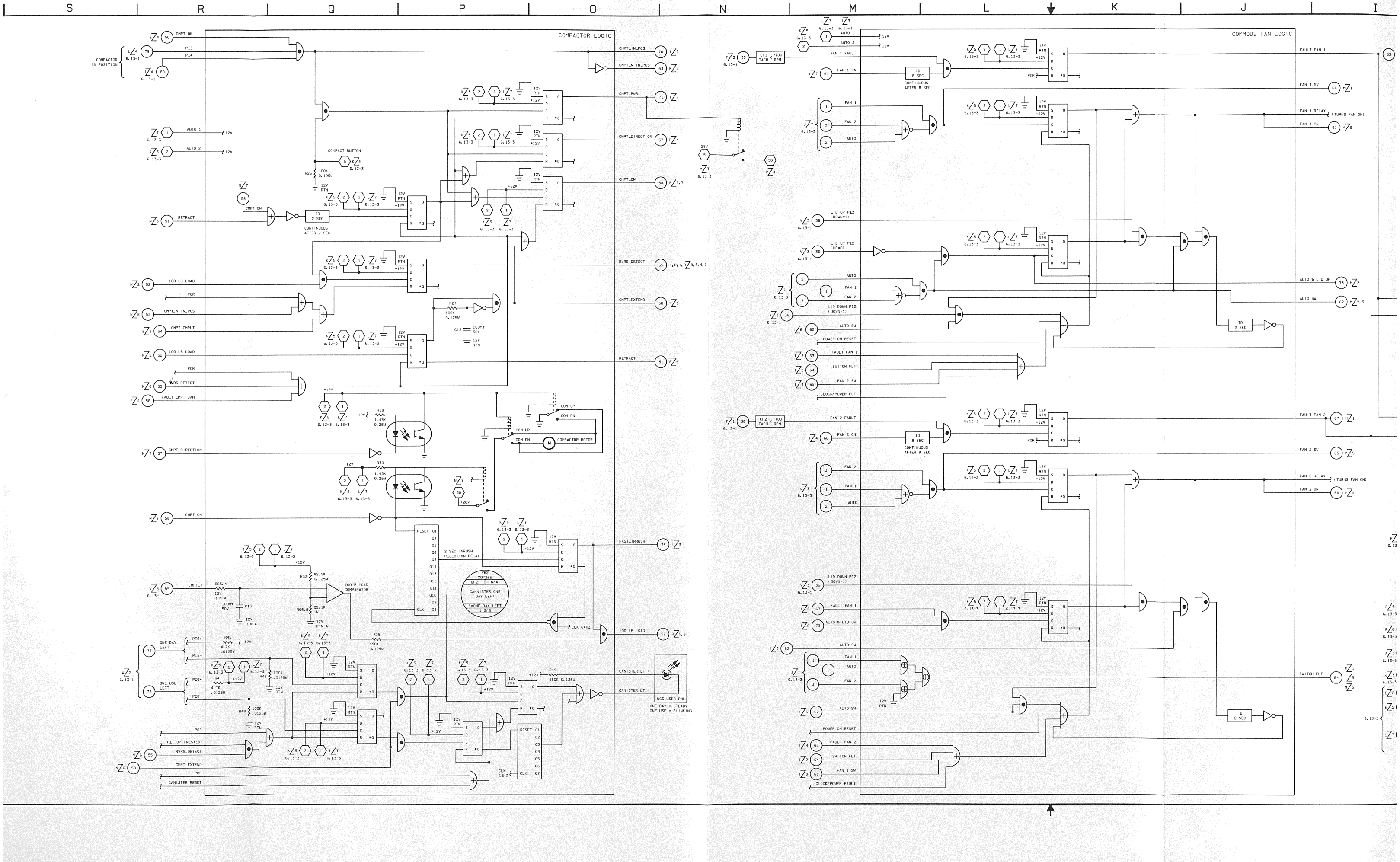

S
R
Q
P
O
N
M
L
K
J
I
COMPACTOR LOGIC
COMMODE FAN LOGIC
COMPACTOR IN POSITION
CMPT OK
PI3
PI4
AUTO 1
AUTO 2
COMPACT BUTTON
CMPT ON
RETRACT
TO 2 SEC
CONTINUOUS AFTER 2 SEC
100 LB LOAD
POR
CMPT_N IN_POS
CMPT_CMPLT
RVRS DETECT
FAULT CMPT JAM
CMPT_DIRECTION
CMPT_ON
CMPT_I
ONE DAY LEFT
ONE USE LEFT
PI5+
PI5-
PI6+
PI6-
PI1 OP (NESTED)
CMPT_EXTEND
CANISTER RESET
CMPT_IN_POS
CMPT_N IN_POS
CMPT_PWR
CMPT_DIRECTION
CMPT_ON
RVRS DETECT
CMPT_EXTEND
RETRACT
COM UP
COM DN
COMPACTOR MOTOR
2 SEC INRUSH REJECTION RELAY
100LB LOAD COMPARATOR
CANNISTER ONE DAY LEFT
1=ONE DAY LEFT
1 S/S
CLK 64HZ
PAST_INRUSH
100 LB LOAD
CANISTER LT +
CANISTER LT -
WCS USER PNL
ONE DAY = STEADY
ONE USE = BLINKING
FAN 1 FAULT
FAN 1 ON
FAN 1
FAN 2
AUTO
LID UP PI2 (DOWN=1)
LID UP PI2 (UP=0)
LID DOWN PI2 (DOWN=1)
AUTO SW
POWER ON RESET
FAULT FAN 1
SWITCH FLT
FAN 2 SW
CLOCK/POWER FLT
FAN 2 FAULT
FAN 2 ON
FAULT FAN 1
FAN 1 SW
FAN 1 RELAY (TURNS FAN ON)
FAN 1 ON
AUTO & LID UP
AUTO SW
FAULT FAN 2
FAN 2 SW
FAN 2 RELAY (TURNS FAN ON)
FAN 2 ON
SWITCH FLT
CLOCK/POWER FAULT

DATE: 10/07/93 | NAME: MDU | VERSION: INK 2

EDO COMMODE FAN LOGIC SEQUENCE

1. IN NOMINAL AUTO OPS, WHEN THE COMMODE LID IS LIFTED, A POSITION INDICATOR, LID UP PI2 (MZ6), SENDS A SIGNAL TO AN AND GATE (LZ6). THIS SIGNAL IN CONJUNCTION WITH THE AUTO SIGNAL (MZ6) ALLOWS THE OUTPUT OF THE AND GATE TO CLOCK A FLIP-FLOP (KZ6).
2. WHEN THIS FLIP-FLOP (KZ6) IS CLOCKED, ITS OUTPUT Q GOES THROUGH AN OR GATE (KZ7) TO THE FAN RELAYS. THESE RELAYS POWER THE FAN ON, FAN 1 RELAY (JZ7). THE OUTPUT OF THE OR GATE ALSO SENDS A FAN 1 ON (JZ7) TO THE FAULT LOGIC.
3. THE FAN 1 ON SIGNAL (MZ8) ENTERS AN 8 SECOND TIME DELAY WHICH ALLOWS THE FAN TO SPIN UP TO THE PROPER RPM'S BEFORE TESTING FOR FAULTS.
4. DURING THIS TIME THE FAN TACHOMETER (6.13-1) IS SENDING A CONTINUOUS SIGNAL. FAN 1 FAULT (MZ8) ON THE OUTPUT OF THE FAN. THIS OUTPUT IS A DISCRETE WHICH DETERMINES WHETHER THE FAN RPM'S ARE WITHIN RANGE.
5. WHEN THE 8 SECOND TIME DELAY IS COMPLETE (MZ8), THE FAN 1 FAULT SIGNAL WILL BE SENT THROUGH AN AND GATE (LZ8) TO A FLIP-FLOP (KZ8). IF THE TACHOMETER IS WITHIN RANGE, THE FAN 1 FAULT SIGNAL SHOULD BE 0 WHICH WILL NOT CLOCK THE FLIP-FLOP. IF, HOWEVER, THE FAN SPEED IS NOT IN RANGE, THE FLIP-FLOP WILL BE CLOCKED AND THE FAULT FAN 1 (JZ8) WILL BE ISSUED.
6. THE FAULT FAN 1 SIGNAL WILL BE SENT IN TWO DIRECTIONS: ONE WILL ILLUMINATE THE COMMODE FAULT LT (EZ5) THE OTHER WILL TURN ON COMMODE FAN 2

ILLUMINATE COMMODE FAN LT

7. THE FAULT FAN 1 SIGNAL (MZ6) PROPAGATES THROUGH TWO OR GATES (FZ5) TO AN AND GATE. THIS AND GATE SIGNAL WILL PROPOGATE IF IT IS THE FIRST FAN FAULT BECAUSE THE OTHER INPUT, THE OUTPUT OF A NAND GATE (FZ4) WILL BE A 1 UNTIL THE SECOND FAN FAULT.
8. THE AND GATE SIGNAL (FZ5) PROPAGATES THROUGH AN OR GATE (EZ5) TO AN INVERTER (EZ5) WHICH ALLOWS THE 12V INPUT (FZ5) TO GO THROUGH THE LIGHT (THEREBY ILLUMINATING IT) TO THE LOW SIGNAL OUT OF THE INVERTER.

TURN ON COMMODE FAN 2

9. THE FAULT FAN 1 SIGNAL ALSO TURNS OFF FAN 1 AND STARTS FAN 2.
10. THE FAULT FAN 1 SIGNAL (MZ5) PROPAGATES THROUGH A 4-INPUT OR GATE (LZ5) TO THE RESET OF THE FLIP-FLOP (KZ6) THAT TURNED ON FAN 1. RESETTING THIS FLIP-FLOP REMOVES POWER FROM FAN 1 AND REMOVES THE FAN 1 ON SIGNAL (JZ7) THAT IS USED IN FAULT DETECTION.
11. FAULT FAN 1 (MZ2) IN CONJUNCTION WITH AUTO & LID UP (MZ2) CLOCKS THE FLIP-FLOP (KZ2) THAT TURNS ON THE RELAY THAT POWERS FAN 2.
12. THE SAME TYPE OF FAULT LOGIC (MZ4) APPLIES TO FAN 2 AS FOR FAN 1.
13. IF FAULT FAN 2 IS DETECTED, IT PROPAGATES TO A NAND GATE (FZ4) THAT INHIBITS THE FAN 1 FAULT AND GATE (FZ5) AND ALLOWS A CLOCK (FZ4) TO BEGIN COUNTING.
14. THE OUTPUT OF THIS CLOCK GOES THROUGH AN OR GATE TO THE SAME INVERTER (FZ5) THAT ILLUMINATED THE LIGHT ORIGINALLY. IN THIS CASE, HOWEVER, THE LIGHT ONLY ILLUMINATES WHEN THE CLOCK OUTPUT IS 1. THIS GIVES THE BLINKING EFFECT.

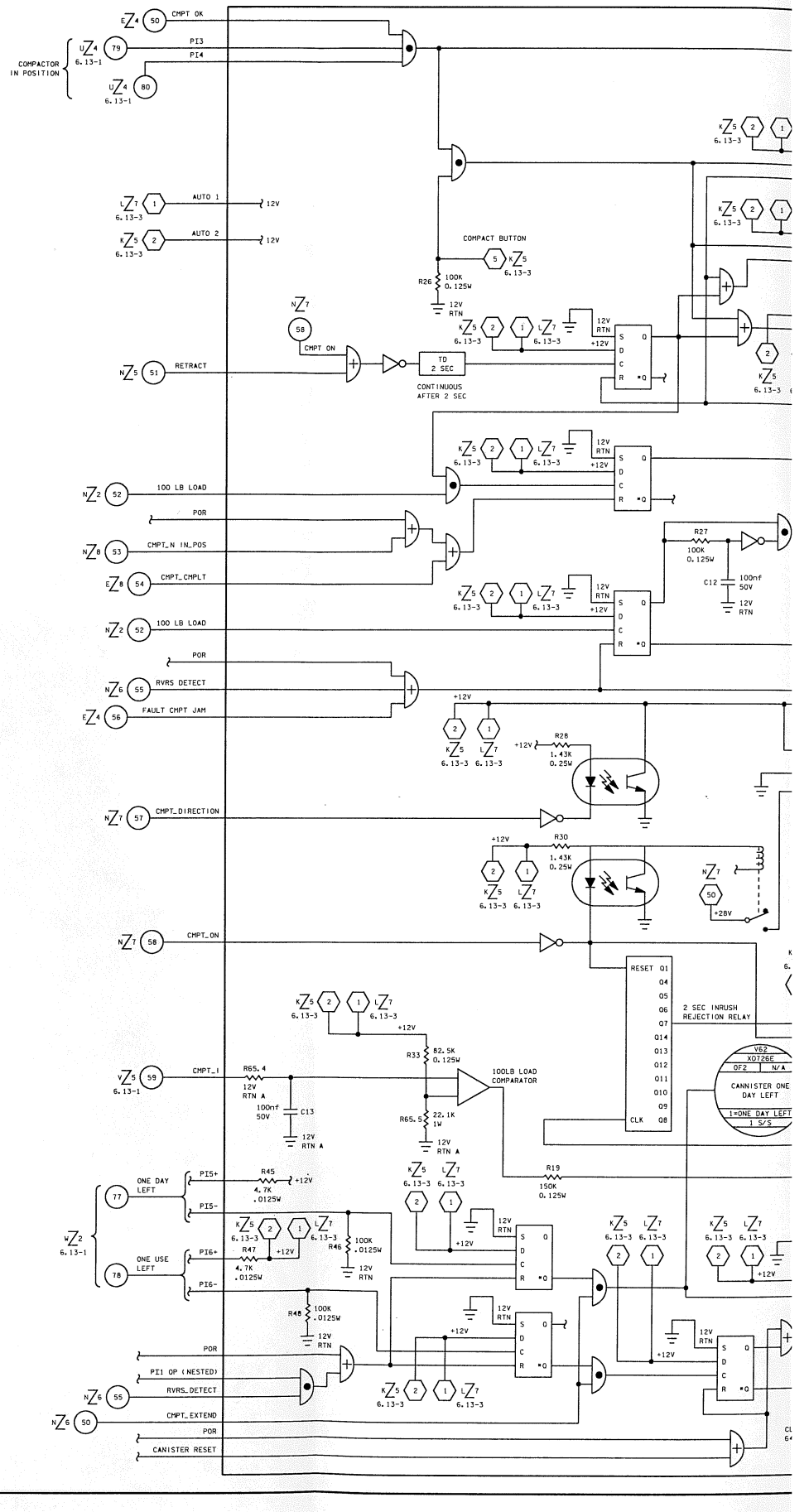

URINAL FAN/SEP LOGIC A

URINAL FAN/SEP LOGIC B

WCS CONTROLLER

DATE: 09/27/93	NAME: MDU	VERSION# INK-2

DATE: 08/24/93	NAME: VSH	VERSION: BPT$_1$ 1
DATE: 09/07/93	NAME: VEH	VERSION: INK$_1$ 1
DATE: 09/27/93	NAME: MDU	VERSION: INK$_2$ 2

O N M L K I H G F E

8 7 6 5 4 3 2 1

2. EDO WCS CONTROLLER URINAL LOGIC

A. THE URINAL SEL SWITCH IS EITHER SELECTED TO SEP 1 OR SEP 2. THE LOGIC FOR BOTH SEPARATORS IS IDENTICAL

B. WHEN THE URINAL HOSE IS UNSTOWED IT GENERATES THE SIGNAL, UNSTOWED PIT (IZ6)

C. THIS SIGNAL IN CONJUNCTION WITH THE SEP 1 (IZ6) SIGNAL FROM THE SWITCH GOES THROUGH AN AND GATE (HZ6) TO TWO LOCATIONS

D. ONE OUTPUT OF THE AND GATE GOES TO THE CLOCK INPUT OF A FLIP-FLOP (GZ6), THE *Q OUTPUT, SEP 1 RELAY OFF/ON, PROPAGATES THROUGH AN INVERTER (CZ6) TO AN OPTOCOUPLER (CZ6) THAT CLOSES THE RELAY THAT POWERS THE SEP MOTOR

E. THE SEP 1 RELAY OFF/ON SIGNAL ALSO FEEDS BACK (IZ7) TO THE FAULT DETECTION LOGIC. THIS SIGNAL PROPAGATES THROUGH AN INVERTER (HZ7) THROUGH AN OR GATE (HZ7) WHERE IT IS A REDUNDANT INPUT TO A TIME DELAY CIRCUIT (GZ7). THE OTHER INPUT IS THE SECOND PART OF THE OUTPUT OF THE SEP 1, UNSTOWED PIT AND GATE (HZ6)

F. THE Q OUPUT OF THE FLIP-FLOP (GZ6), SEP 1 ON, ALSO GOES TWO PLACES. THE FIRST FEEDS BACK INTO THE FAULT LOGIC (IZ7) TO ALLOW THE FAULT SIGNAL FROM THE SEP 1 TACH (CZ3) TO PROPAGATE THROUGH AN OR GATE TO AN AND GATE (GZ7) WHERE IT WAITS FOR THE TIME DELAY CIRCUIT TO COMPLETE

G. IF EVERYTHING IS NOMINAL THE FAULT SEP 1 SIGNAL (IZ7) SHOULD DROP TO ZERO WELL BEFORE THE TIME DELAY CIRCUIT RUNS OUT

H. THE SECOND PLACE THE SEP 1 ON SIGNAL (FZ7) GOES IS TO AN AND GATE (DZ5) WHERE IT WAITS FOR THE SIGNAL FROM THE TACHOMETER THAT THE SEPARATOR HAS REACHED THE ACCEPTABLE SPEED

I. WHEN THE TACHOMETER DETECTS THAT THE SPEED IS WITHIN LIMITS IT DROPS THE FAULT SEP 1 SIGNAL TO ZERO AND SETS THE TURN ON FAN 1 SIGNAL (CZ3) TO 1

J. THE TURN ON FAN 1 SIGNAL IN CONJUNCTION WITH THE SEP 1 ON SIGNAL (DZ5) PROPAGATE THROUGH TWO AND GATES (DZ5) TO THE CLOCK INPUT OF A FLIP-FLOP (CZ5). THE *Q OUTPUT OF THIS FLIP-FLOP GOES THROUGH AN OPTOCOUPLER (CZ6) THAT CLOSES THE RELAY THAT TURNS THE FAN ON

K. THE FAN 1 ON SIGNAL FROM THE Q OUTPUT OF THE FLIP-FLOP (CZ6) FEEDS BACK TO THE FAULT LOGIC (IZ7) WHERE IT ALLOWS THE FAULT FAN 1 INPUT TO PROPAGATE THROUGH AN OR GATE TO AN AND GATE (GZ7) WHERE IT WAITS FOR THE TIME DELAY CIRCUIT TO RUN OUT. THE FAN SHOULD COME UP TO SPEED WELL BEFORE THE TIME DELAY EXPIRES

URINAL READY LIGHT

L. WHEN THE URINAL FAN IS UP TO SPEED AND THE TACHOMETER ISSUES THE U FAN 1 OK SIGNAL (CZ2), IT, AFTER PASSING THROUGH AN OR GATE (HZ3, 6.13-2), IN CONJUNCTION WITH THE FAN 1 ENA SIGNAL (FZ6), WHICH ALSO PASSES THROUGH AN OR GATE (HZ3, 6.13-2), CLOCKS A FLIP-FLOP (FZ3, 6.13-2)

M. THE Q OUTPUT OF THIS FLIP-FLOP PROPAGATES THROUGH AN OR GATE TO AN INVERTER WHICH LETS THE CURRENT FLOW FROM THE VOLTAGE SOURCE THROUGH THE READY LIGHT (EZ3, 6.13-2), THEREBY ILLUMINATING IT

N. THE READY LIGHT IS EXTINGUISHED WHEN THE FAN 1 SHTDN OR THE SEP 1 RELAY OFF/ON SIGNALS (HZ2, 6.13-2) IN CONJUNCTION WITH THE SEP 1 SIGNAL (HZ2, 6.13-2) RESET THE FLIP-FLOP (FZ3, 6.13-2) THAT FIRST CAUSED THE LIGHT TO ILLUMINATE

URINAL FAULT LIGHT

O. IF A FAULT DOES OCCUR, THE FAULT FS 1 SIGNAL (FZ7) WILL BE ISSUED

P. THIS SIGNAL WILL GO THROUGH AN OR GATE (HZ2, 6.13-2) TO AN AND GATE (FZ1, 6.13-2). THE OTHER INPUT TO THAT AND GATE IS THE OUTPUT OF A NAND GATE (HZ1, 6.13-2) THAT WILL OUTPUT A 1 UNLESS BOTH FAN SEP FAULTS HAVE OCCURRED

Q. THE OUTPUT OF THE AND GATE (FZ1, 6.13-2) GOES THROUGH AN INVERTER WHICH ALLOWS THE CURRENT FROM THE VOLTAGE SOURCE THROUGH THE LIGHT, THEREBY ILLUMINATING IT

R. WHEN A SECOND FAULT OCCURS THE OUTPUT OF THE NAND GATE (NZ1, 6.13-2) WILL DROP TO ZERO MOMENTARILY EXTINGUISHING THE LIGHT

S. WHEN THE OUTPUT OF THE NAND GATE (HZ1, 6.13-2) DROPS, A CLOCK IS ALLOWED TO RUN WHICH SENDS PULSES THROUGH AN OR GATE (FZ1, 6.13-2) THROUGH AN INVERTER, THEREBY PRODUCING THE BLINKING EFFECT

NOTES: 1. SR FLIP-FLOP WITH DATA TRUTH TABLE

S	R	C	D	Q	*Q
1	0	X	X	1	0
0	1	X	X	0	1
0	0	0	X	UNSTABLE	
0	0	1	0	0	1
0	0	1	1	1	0
0	0	0	*	LAST VALUE	
1	1	X	X	NOT ALLOWED	

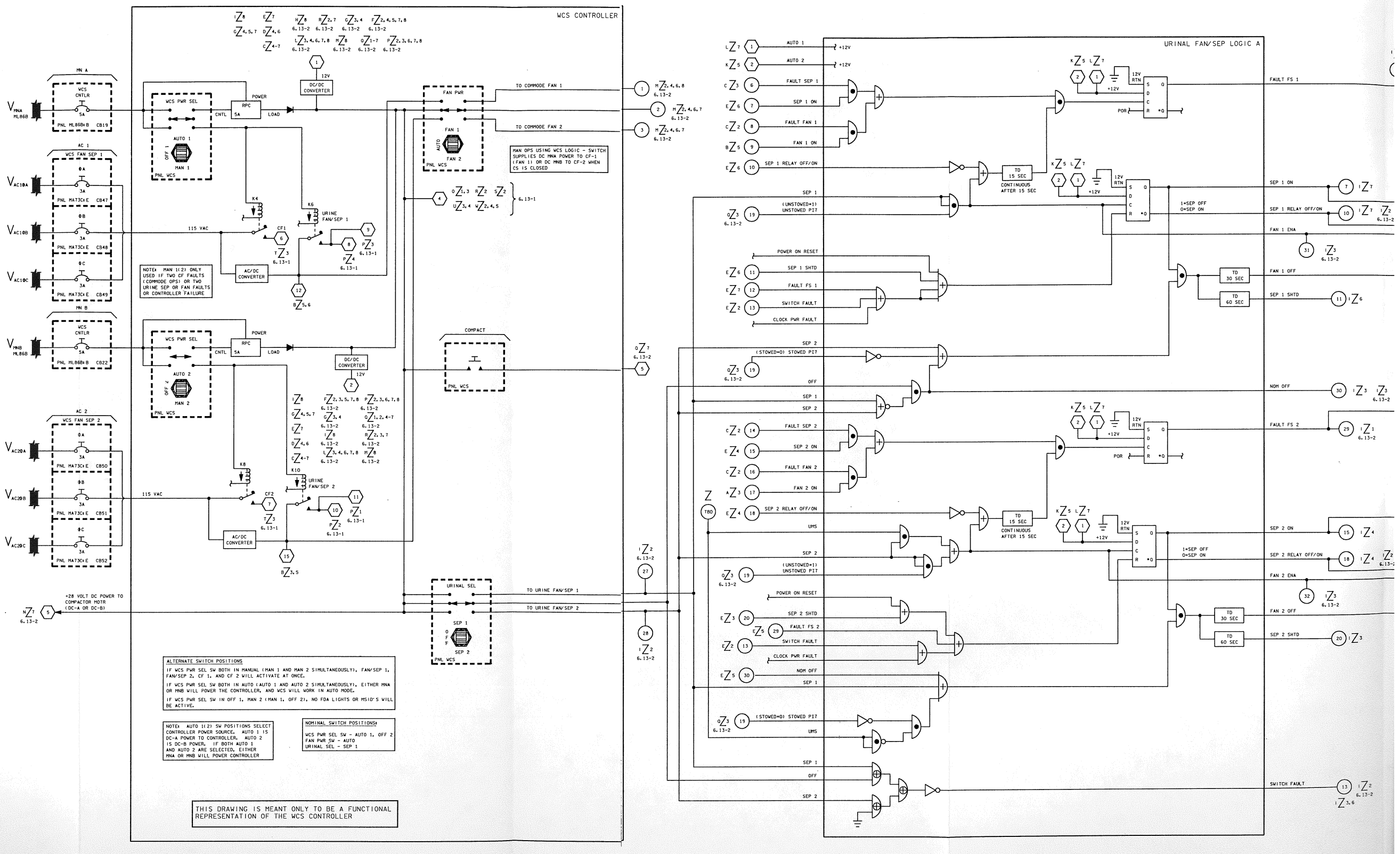

NATIONAL AERONAUTICS AND SPACE ADMINISTRATION LYNDON B. JOHNSON SPACE CENTER HOUSTON, TEXAS		SIGNATURE	DATE
EDO WASTE MANAGEMENT		DSGN C. RILEY	10/26/93
		DR S. EGAN-WYER	1/04/93
		ENGR M. FITZPATRICK	
		ENGR M.S. Fitzpatrick	9/29/93
		APP	10/5/93
DWG NO 6.13	SPACE SHUTTLE OV 105	APP	
		CADD S.K. Kimbrough	10-4-93
SHEET 3 OF 3	PAGE 82.5 X 34	LTR E	PCN 3

* 13 EDO WMS 3

BASIC REV E-3

DATE: 02/21/96	NAME: VSH	VERSION: BPT-5
DATE: 03/01/96	NAME: VSH	VERSION: BPT-6
DATE: 05/10/96	NAME: CAR	VERSION: INK-2

DSP
SYS PWR
SYS 2 MN B
ON
OFF
DS4
MID POWER CONTROLLER NO. 2 (MPC 2)
V_{MNB} MPC2
V_{MNB} AT
5.1K
PNL ATL
F30 10A
F31 10A
F38 10A
F39 10A
F36 10A
F37 10A
F32 10A
OFF ON
ATL(AGL) S2
Z_3 2.6-1
DEPRESS MAIN B
SYS 2
VENT ISOL
3A
PNL ATL(AGL) CB7
VESTIBULE DEPRESS VALVE
SYS 2 VENT ISOL
OP CL
OPEN
CLOSE
PNL ATL(AGL) S7
1.21K
V64 X0145E OF3 VEST DEPRESS ISOL VLV 2 OPEN 1=OPEN 1 S/S
V64 X0146E OF3 VEST DEPRESS ISOL VLV 2 CLOSE 1=CLOSED 1 S/S
PNL ATL(AGL) S8
V64 X0147E OF4 VEST DEPRESS VLV 2 OPEN 1=OPEN 1 S/S
V64 X0148E OF4 VEST DEPRESS VLV 2 CLOSE 1=CLOSED 1 S/S
1320 LBM/HR @ ΔP = 14.7 PSID NON-PROPULSIVE (292.8 FT³/MIN, 8.8 M³/MIN)
Z_5
Z_6
MID POWER CONTROLLER NO. 1 (MPC 1)
V_{MNA} MPC1
V_{MNA} AT
Z_7 2.6-1
DEPRESS MAIN A
SYS 1
VENT ISOL
PNL ATL(AGL) CB2
PNL ATL(AGL) S5
PNL ATL(AGL) S6
V64 X0141E OF2 VEST DEPRESS ISOL VLV 1 OPEN 1=OPEN 1 S/S
V64 X0142E OF2 VEST DEPRESS ISOL VLV 1 CLOSE 1=CLOSED 1 S/S
V64 X0143E OF2 VEST DEPRESS VLV 1 OPEN 1=OPEN 1 S/S
V64 X0144E OF2 VEST DEPRESS VLV 1 CLOSE 1=CLOSED 1 S/S
VESTIBULE DEPRESS VALVE PACKAGE (LOCATED EXTERNAL TO VESTIBULE - SEE Z_5)
1320 LBM/HR @ ΔP = 14.7 PSID NON-PROPULSIVE (292.8 FT³/MIN, 8.8 M³/MIN)
ODS VESTIBULE OVERBOARD
CABIN PAYLOAD BAY
EQUALIZATION VALVE - FLOWS 357.2 LBM/HR (79.2 FT³/MIN, 2.2 M³/MIN) AT ΔP = 14.7 PSID
PRESSURE PORT VALVE
CONTINGENCY HATCH EQUALIZATION PLUG - FLOW 63.5 LBM/HR @ ΔP = 14.7 PSID (14.1 FT³/MIN, 0.39 M³/MIN) - PLUG IS REMOVABLE ONLY FROM SHUTTLE SIDE OF HATCH
DM HATCH (APAS-2)
(HATCH OPENS INTO VESTIBULE)
DOCKING MODULE (DM)
SHUTTLE/VESTIBULE
VESTIBULE DEPRESS VALVE PACKAGE (SEE Z_5)
V64 T0133A OF2 OF2 VESTIBULE TEMP 1 -75 TO +175°F 1 S/S
V64 T0134A OF3 OF2 VESTIBULE TEMP 2 -75 TO +175°F 1 S/S
ODS HATCH
V64 P0127A OF2 OF2 EXT AL/ VESTIBULE DELTA P -20 TO +20 PSIA 1 S/S
NEGATIVE PRESSURE RELIEF VALVES (2) ONE ON EACH SIDE OF EXTERNAL A/L (SAME DESIGN AS THOSE ON SPACELAB TUNNEL)
MPCA 2 (DC MNB)
V64 P0126A OF4 EXT AIRLOCK PRESS 0 TO 20 PSIA 1 S/S
V64 T0132A OF2 OF2 EXT AIRLOCK TEMP 25 TO 130°F 1 S/S
B-HATCH (OPENS INTO EXTERNAL AIRLOCK)
D-HATCH (OPENS INTO EXTERNAL AIRLOCK)
SPACEHAB HATCH
EXTERNAL AIRLOCK
TUNNEL EXTENSION
Z_2
SCREEN ADAPTER ASSY
TAPED OVER
AFT
ELBOW ASSY
ADAPTER ASSY
CLAMP
Z_7 6.5
Z_6 6.13-1
X_0 = 576
FROM MCE VACUUM VENT
AIRLOCK DEPRESS VALVE
TO OVERBOARD VACUUM VENT
REMOVABLE FROST SCREEN
6 MESH
V64 P0102A OF1 OF1 AL DIFF PRESS 2 -20 TO +20 PSID 1 S/S
EVA HATCH
C-HATCH (OPENS INTO TUNNEL ADAPTER)
A-HATCH (OPENS INTO CREW COMPARTMENT)
INNER AIRLOCK HATCH
D-HATCH (OPENS INTO TUNNEL ADAPTER)
TUNNEL ADAPTER HATCH
V64 T0131A OF1 OF1 AL WALL TEMP-PLD 25 TO 130°F 1 S/S
V64 T0130A OF1 OF1 AL WALL TEMP-TA 25 TO 130°F 1 S/S
V64 P0101A OF3 OF3 AL DIFF PRESS 1 -20 TO +20 PSID 1 S/S
TUNNEL ADAPTER
INTERNAL AIRLOCK

1. TUNNEL SEGMENTS ARE SPACELAB HARDWARE
2. MIR EXTENSION DUCT IS ATTACHED AT THIS POINT, TO FLEX DUCT JUST BELOW HALO HARD-ATTACH POINT. THERE IS NO AIRFLOW TO HALO WHEN IN THIS CONFIG
3. FLEX SECTION IS PRESENT ONLY IF MODULE (HAB OR LAB) IS FLOWN
4. RESERVED
5. PANEL LOCATION FOR AR/L/TNL FAN SW IS FLIGHT-CONFIG DEPENDENT. WHEN RMS IS FLOWN, PANEL NOMENCLATURE WILL BE A6L, WITHOUT RMS, PANEL WILL BE A7L
6. ODS FLOOR FEATURES AIR HOLES AROUND THE PERIMETER, TO ALLOW AIR OUT FROM ODS ELECTRONICS. FIRE PORTS EXIST IN FLOOR THROUGH WHICH A HAND-HELD FIRE EXTINGUISHER MAY BE DISCHARGED
7. DETAILS ON THIS VALVE SHOW A MANUAL OVERRIDE CAPABILITY WITH THE MOTOR. THE MANUAL OVERRIDE PROTECTS AGAINST AN INADVERTENT OPENING OF THE MOTOR DRIVEN SECTION
8. ALL NEGATIVE PRESSURE RELIEF VALVES ARE OF SAME DESIGN
9. RESERVED
10. BOOSTER FANS ARE THE SAME TYPE AS ORBITER AV BAY FANS
11. FILTER MAY BE ACCESSED FOR CLEANING BY REMOVAL OF 20 BOLTS AND COVER
12. BOOSTER FANS A AND B MAY BE SWAPPED BETWEEN POSITIONS HOWEVER, THE BOOSTER FAN ASSEMBLY COVERING MUST BE REMOVED, REQUIRING THE REMOVAL OF 61 SCREWS
13. RESERVED
14. WARMER, DRYER MID-DECK AIR IS MIXED WITH COOLER, MORE MOIST AIR CABIN MX. A SPECIAL FITTING, ATTCHED TO THE MID-DECK AIT OUTLET, ALLOWS THIS TO OCCUR. SEE ALSO DWG 6.3-1 (AIRLOCK/ECLSS INTERFACES)

NOTES: 1. VESTIBULE DEPRESS VALVES ARE FUNCTIONALLY IDENTICAL TO ORBITER CABIN DEPRESS VALVES

14 EXT AIRLK ECLSS

SIGNATURE	DATE	NATIONAL AERONAUTICS AND SPACE ADMINISTRATION LYNDON B. JOHNSON SPACE CENTER HOUSTON, TEXAS
DSGN J. BLANCHARD	10/17/94	
DR		
ENGR S. TRIPODI		EXTERNAL AIRLOCK ECLSS
ENGR		
APP		
APP		SPACE SHUTTLE
CADS S.K. Kimbrell	6/17/96	ALL
LTR E PCN 6		126.5 X 34

DWG NO 6.14
PAGE SHEET 1 OF 1

BASIC REV E-6

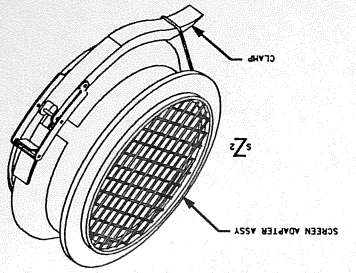
CLAMP
SCREEN ADAPTER ASSY

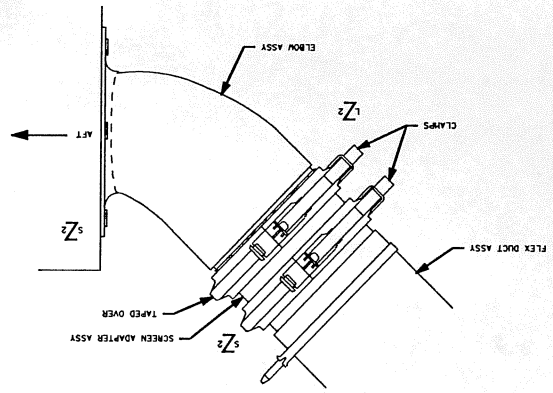
ELBOW ASSY
CLAMPS
AFT
TAPED OVER
SCREEN ADAPTER ASSY
FLEX DUCT ASSY

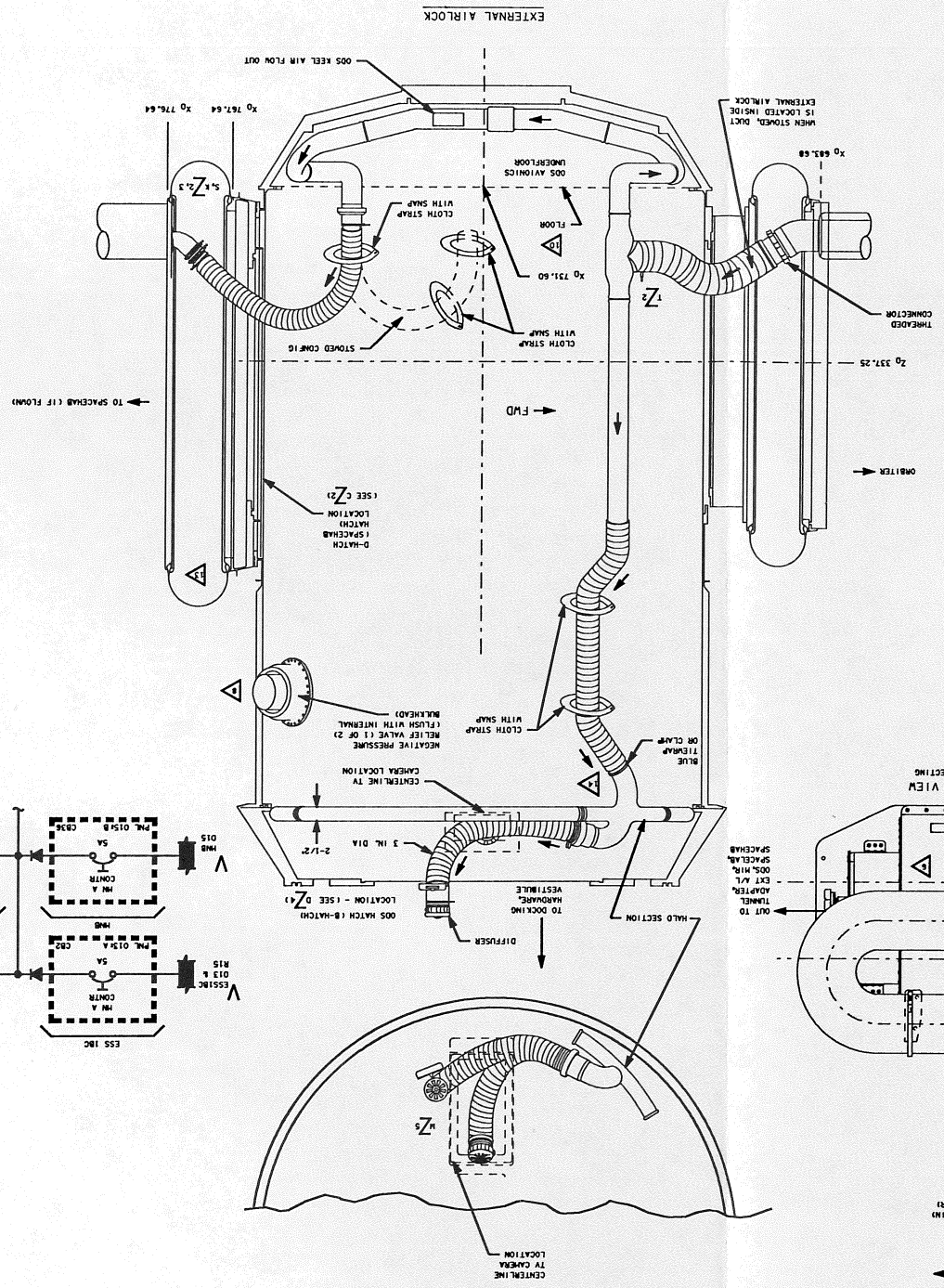
EXTERNAL AIRLOCK
005 KEEL AIR FLOW OUT
STOWED CONFIG
CLOTH STRAP WITH SNAP
005 AVIONICS UNDERFLOOR
FLOOR
WHEN STOWED, DUCT IS LOCATED INSIDE EXTERNAL AIRLOCK
TUNNEL ADAPTER
TO SPACEHAB (IF FLOWN)
D-HATCH (SPACEHAB HATCH) LOCATION
FWD
ORBITER
BLUE TIEBAR OR CLAMP
RELIEF VALVE (1 OF 2) (FLUSH WITH INTERNAL BULKHEAD)
CENTERLINE TV CAMERA LOCATION
3 IN. DIA
2-1/2"
005 MATCH (B-HATCH) LOCATION - (SEE D24)
10 DOCKING ASSEMBLY/ VESTIBULE
DIFFUSER
HALO SECTION
CENTERLINE TV CAMERA LOCATION

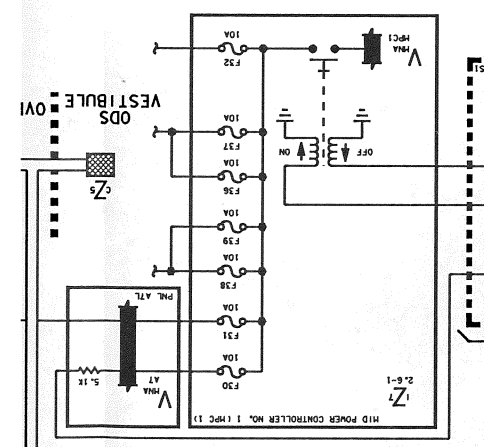
MID POWER CONTROLLER NO. 1 (MPC 1)
MID POWER CONTROLLER NO. 2 (MPC 2)
ODS VESTIBULE
ESS 18C
ESS 20A
SYS PWR CNTL
DISP
SYS 1 PWR A
SYS 2 PWR B
PWR ATLAS1
PWR ATLAS2
PWR ATLAS3
PWR ATLAS4
PWR ATLAS5
PWR ATLAS6
PWR ATL
VPA MPC1
VPB MPC2
VESC16C
VESC18C
VESC20A
VESC24A
VESC16A
VESC18A
VESC20C
VESC24C

MIR EXTENSION DUCT
TO MIR ARS DUCT
ADAPTER
CLAMP
TO 005/EXT ARLK DUCT

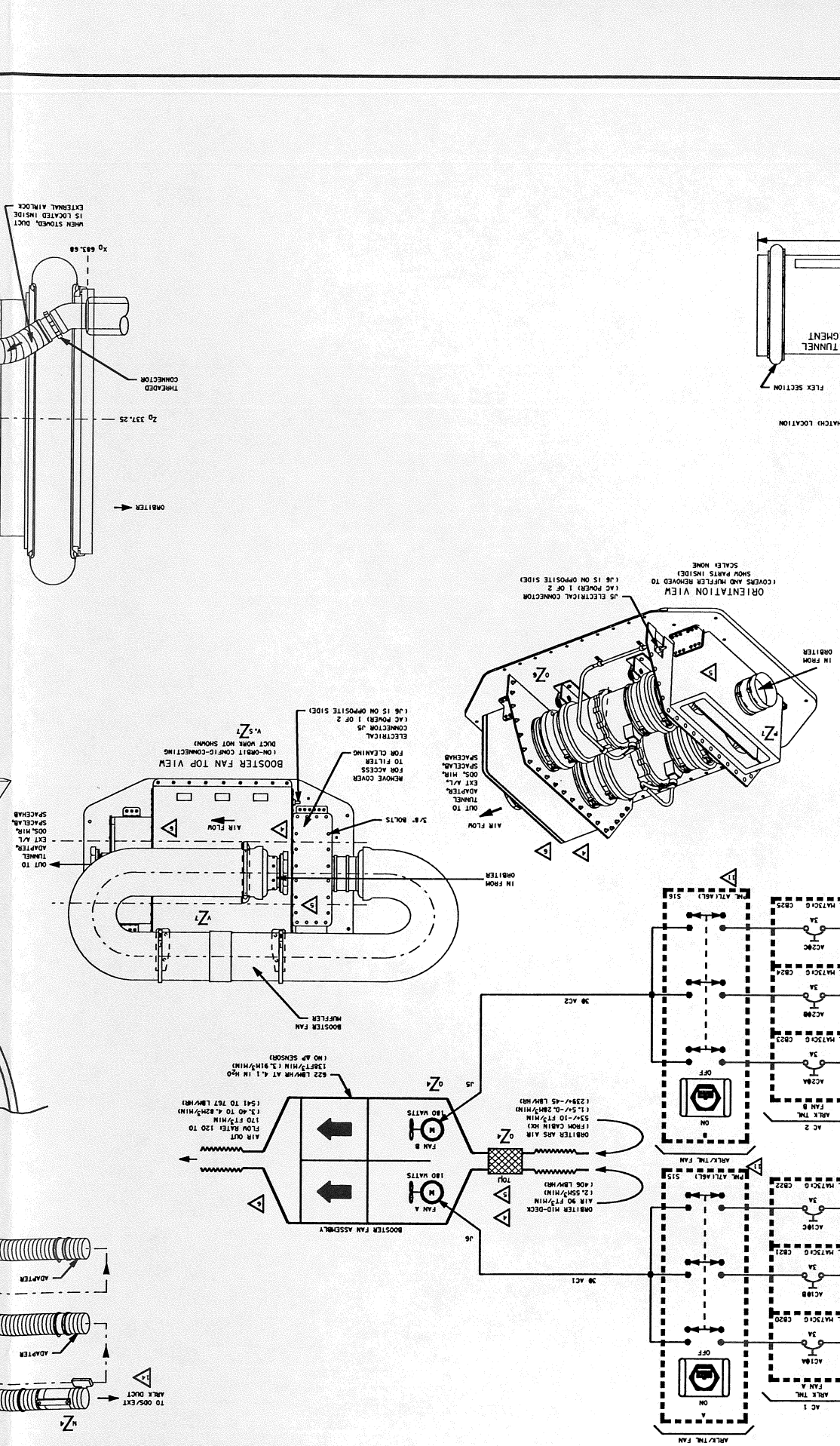
ORIENTATION VIEW
(COVERS AND BAFFLES REMOVED TO SHOW PARTS INSIDE)
SCALE: NONE
J5 ELECTRICAL CONNECTOR (AC POWER) 1 OF 2 (J6 IS ON OPPOSITE SIDE)
IN FROM ORBITER
AIR FLOW OUT TO ORBITER
BOOSTER FAN TOP VIEW
(ON-ORBIT CONFIG-CONNECTING DUCT WORK NOT SHOWN)
ELECTRICAL CONNECTORS J5 (AC POWER) 1 OF 2 (J6 IS ON OPPOSITE SIDE)
REMOVE COVER FOR ACCESS TO FILTER FOR CLEANING
5/8" BOLTS
OUT TO TUNNEL ADAPTER, 005 MIR, EXT ALT SPACELAB, SPACEHAB
BOOSTER FAN ASSEMBLY
ORBITER MID-DECK AIR SUPPLY (FROM CABIN HX) 55+/-10 FT3/MIN (1.55+/-0.28M3/MIN) (238+/-45 LBH/HR)
ORBITER AFS AIR FLOW RATE: 120 TO 170 FT3/MIN (3.40 TO 4.82M3/H)MIN (541 TO 767 LBH/HR)
AIR OUT
622 LBH/HR AT 4.1 IN H2O (NO AP SEN300)
1287 FT3/MIN (36.51M3/MIN)
FAN B
FAN A
180 WATTS
J5
J6
J4
J3
ARLK/TNL FAN
ARLK TNL FAN A
ARLK TNL FAN B
AC 1
AC 2
PWR ATLAS1
PWR ATLAS2
PWR ATLAS3
PWR ATLAS4
PWR ATLAS5
PWR ATLAS6
VAC16A
VAC16B
VAC16C
VAC24A
VAC24B
VAC24C
ON
OFF

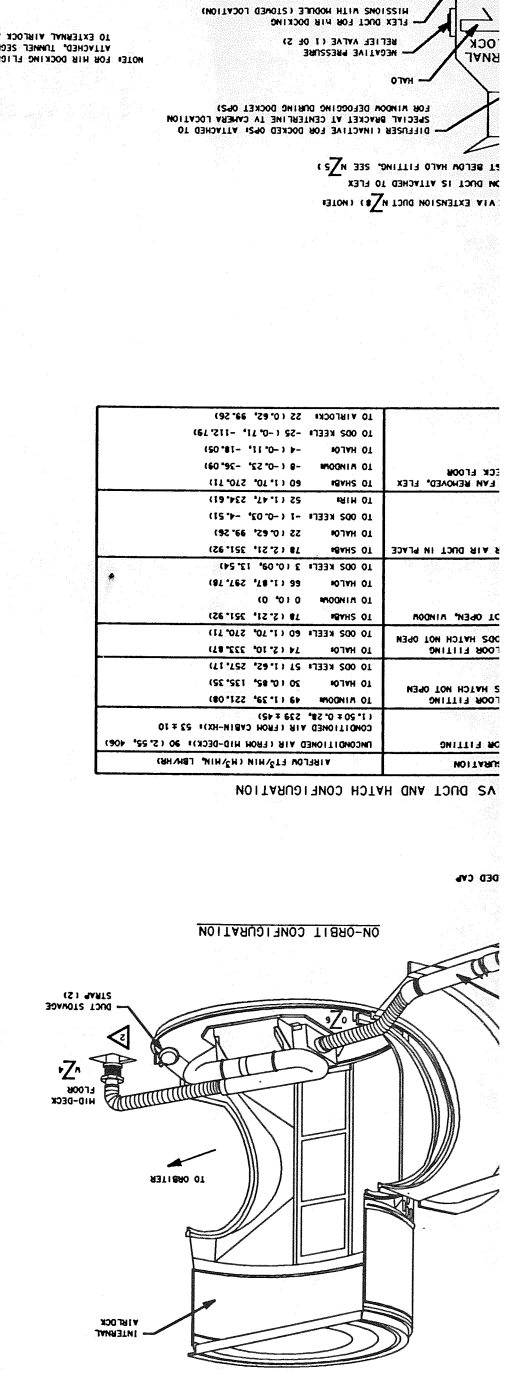
ON-ORBIT CONFIGURATION
MID-DECK FLOOR
DUCT STOWAGE STRAP (2)
TO ORBITER
INTERNAL AIRLOCK

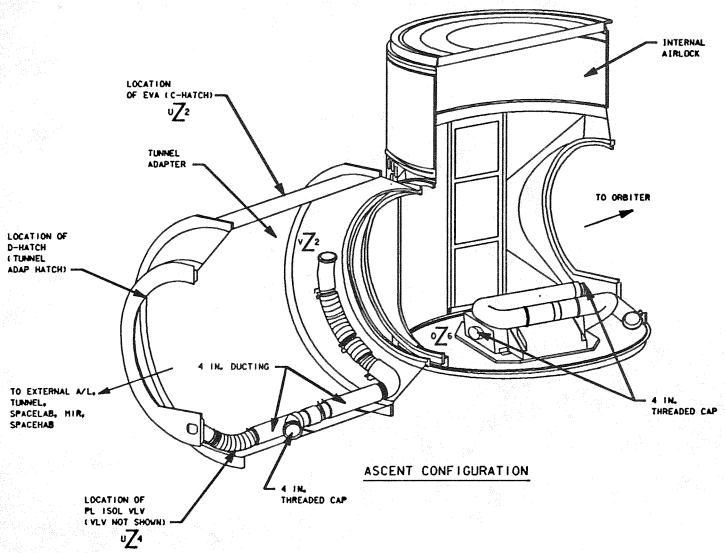

ASCENT CONFIGURATION

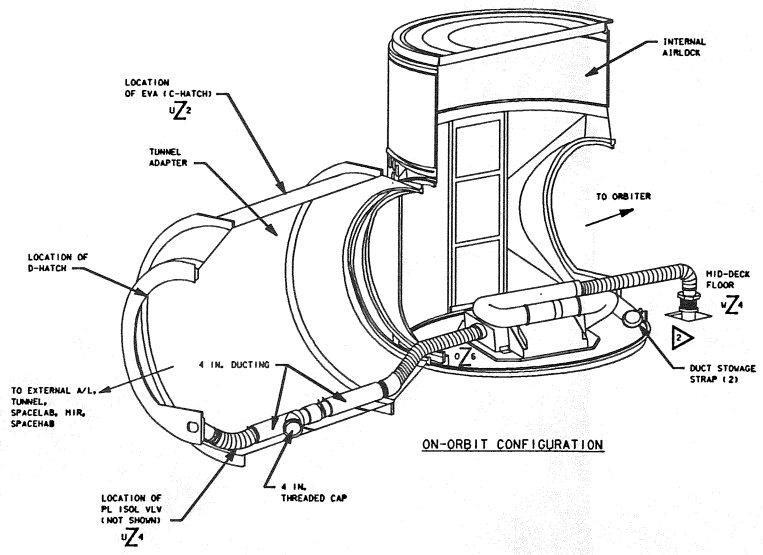

ON-ORBIT CONFIGURATION

AIRFLOW VS DUCT AND HATCH CONFIGURATION

DUCT AND HATCH CONFIGURATION	AIRFLOW FT³/MIN (M³/MIN, LBM/HR)
1. AIRFLOW THROUGH MID-DECK FLOOR FITTING	UNCONDITIONED AIR (FROM MID-DECK): 90 (2.55, 406)
	CONDITIONED AIR (FROM CABIN HX): 53 ± 10 (1.50 ± 0.28, 239 ± 45)
2. SHAB HATCH CLOSED, EXT A/L FLOOR FITTING CAPPED, WINDOW DUCT OPEN, ODS HATCH NOT OPEN	TO WINDOW: 49 (1.39, 221.08)
	TO HALO: 30 (0.85, 135.35)
	TO ODS KEEL: 57 (1.62, 257.17)
3. SHAB HATCH CLOSED, EXT A/L FLOOR FITTING CAPPED, WINDOW DUCT CLOSED, ODS HATCH NOT OPEN	TO HALO: 74 (2.10, 333.87)
	TO ODS KEEL: 60 (1.70, 270.71)
4. SHAB HATCH OPEN, ODS HATCH NOT OPEN, WINDOW SUPPLY BLOCKED	TO SHAB: 78 (2.21, 351.92)
	TO WINDOW: 0 (0, 0)
	TO HALO: 66 (1.87, 297.78)
	TO ODS KEEL: 3 (0.09, 13.54)
5. ALL HATCHES OPEN, SHUTTLE/MIR AIR DUCT IN PLACE	TO SHAB: 78 (2.21, 351.92)
	TO HALO: 22 (0.62, 99.26)
	TO ODS KEEL: -1 (-0.03, -4.51)
	TO MIR: 52 (1.47, 234.61)
6. EVA/10.2 ATM CONFIG: BOOSTER FAN REMOVED, FLEX DUCT STILL ATTACHED TO MID-DECK FLOOR (PROVIDING AIR TO AIRLOCK)	TO SHAB: 60 (1.70, 270.71)
	TO WINDOW: -8 (-0.23, -36.09)
	TO HALO: -4 (-0.11, -18.05)
	TO ODS KEEL: -25 (-0.71, -112.79)
	TO AIRLOCK: 22 (0.62, 99.26)

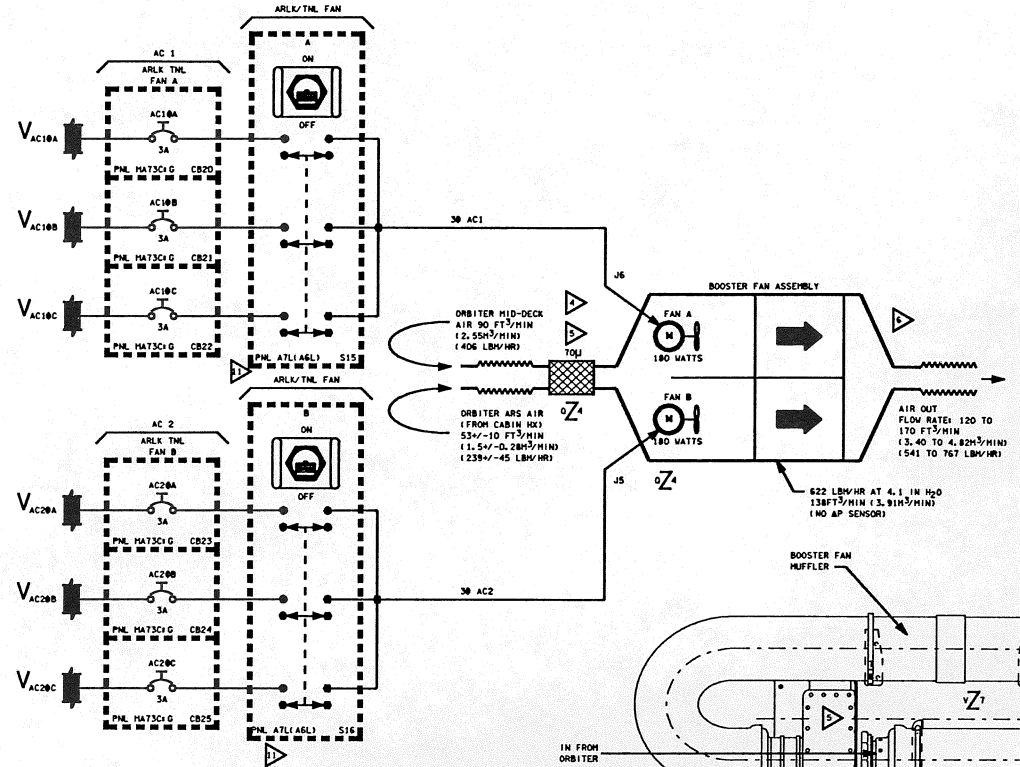

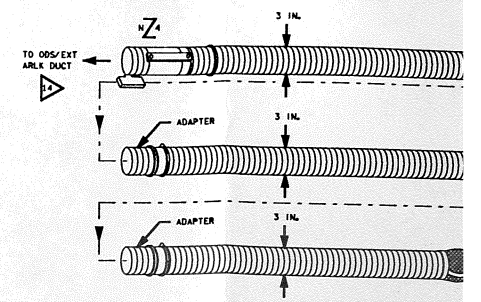

MIR EXTENSION DUCT

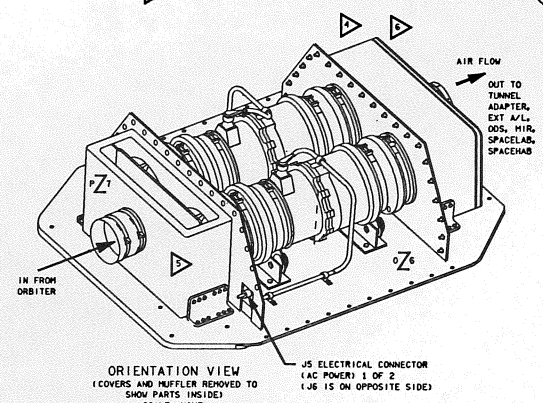

ORIENTATION VIEW
(COVERS AND MUFFLER REMOVED TO SHOW PARTS INSIDE)
SCALE: NONE

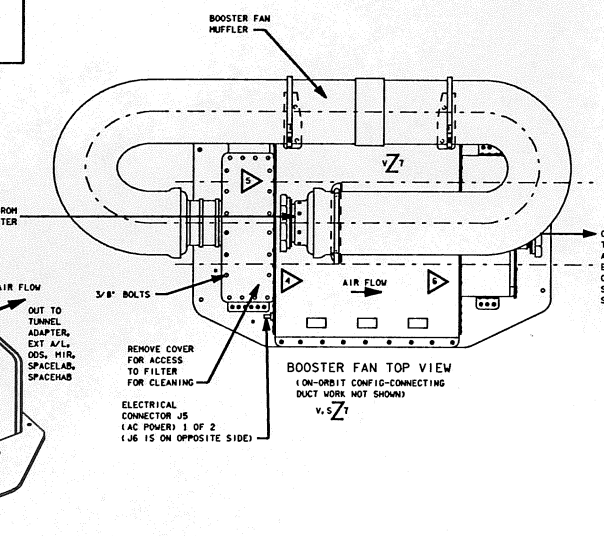

BOOSTER FAN TOP VIEW
(ON-ORBIT CONFIG-CONNECTING DUCT WORK NOT SHOWN)

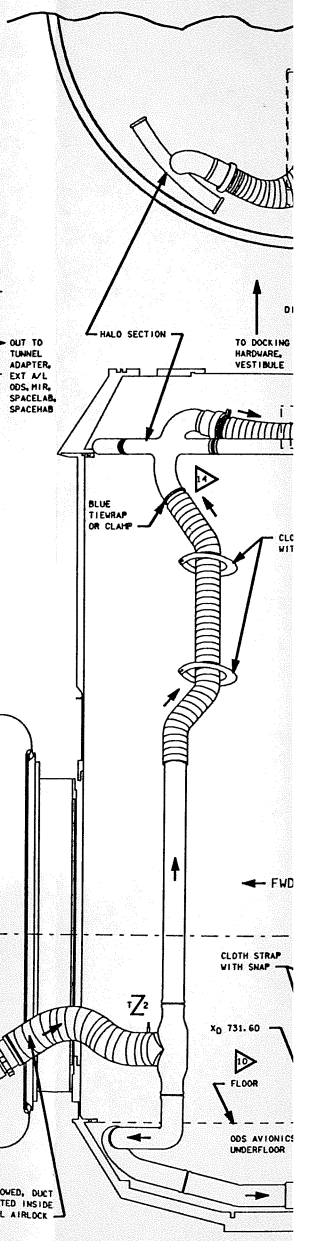

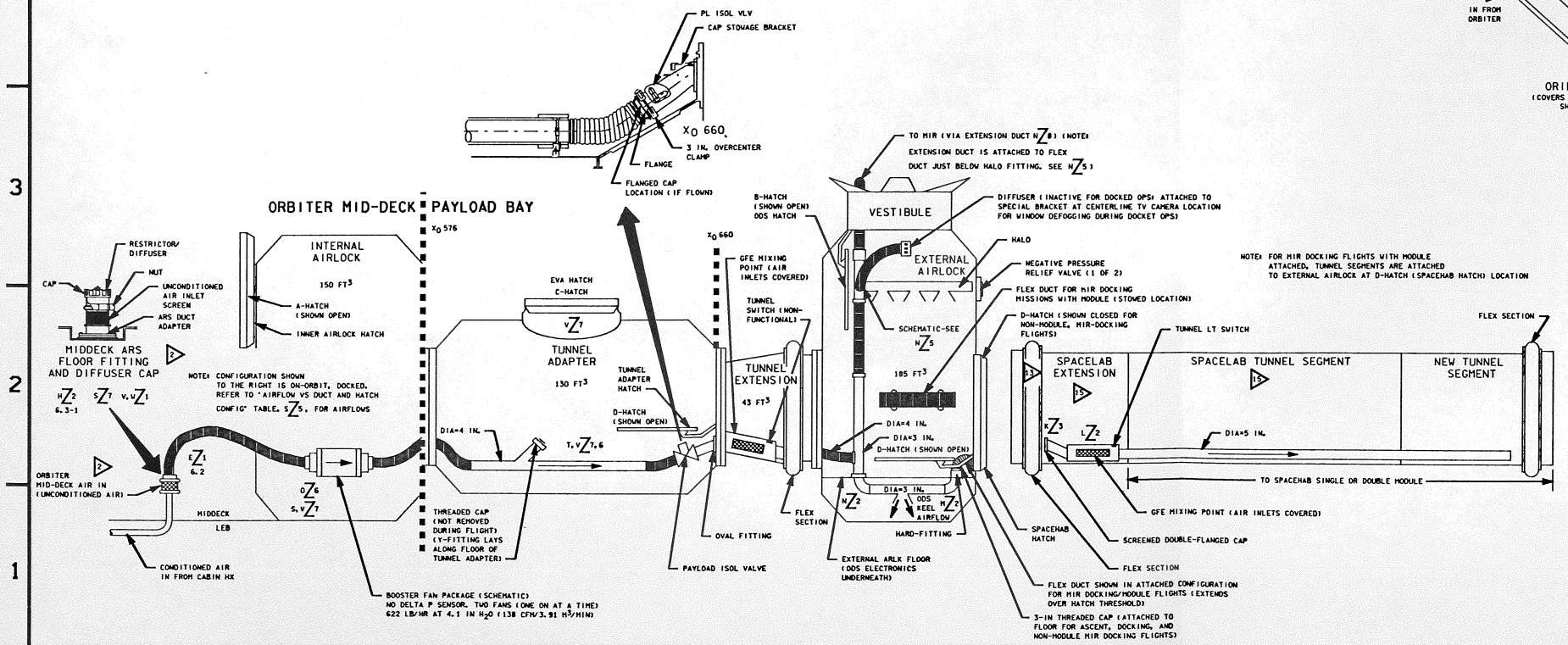

FOR DETAILED COMPONENT AND LOGIC INFORMATION REFER TO:

SSSH DWG NO.	SSSH DWG TITLE	VENDOR NAME	VENDOR DWG NO.	VENDOR SHEET NO.	REV	DATE	VENDOR DRAWING TITLE
6.1 (SHEETS 1 & 2)	PRESSURE CONTROL SYSTEM 1, 2	R. I.	VS70-960099	60BA	E	9/19/87	ARPCS - OXYGEN SUPPLY AND CABIN PRESSURE CONTROL
		R. I.	VS70-960099	60BB	E	9/19/87	ARPCS - NITROGEN SUPPLY
		R. I.	VS70-960099	60BC	E	9/19/87	ARPCS - OXYGEN PARTIAL PRESSURE CONTROL
		R. I.	V270-960099	60BE	E	9/19/87	ARPCS - OXYGEN SYSTEM INSTRUMENTATION
		R. I.	VS70-960099	B0BF	E	9/19/87	ARPCS - NITROGEN SYSTEM 1, 2, INSTR
		R. I.	VS70-960099	60BG	E	9/19/87	ARPCS - CABIN PRESSURE CONTROL INSTR
		R. I.	VS70-960099	60BH	E	9/19/87	MMU - FSS PORT
		R. I.	VS70-960099	60BJ	E	9/19/87	MMU - FSS STARBOARD
		R. I.	VS70-960099	60DA	E	9/19/87	AECS - AIRLOCK ENVIRONMENTAL CONTROL
		R. I.	VS70-960099	60DB	E	9/19/87	AECS - AIRLOCK ENVIRONMENTAL CONTROL 1
		R. I.	VS70-960099	60DC	E	9/19/87	AECS - AIRLOCK ENVIRONMENTAL CONTROL 2
		R. I.	VS70-960099	60DE	E	9/19/87	AECS - 0_2 EMERGENCY BREATHING
		R. I.	VS70-960102	60BA	E	3/8/85	ARPCS - OXYGEN SUPPLY & CABIN PRESSURE CONTROL
		R. I.	VS70-960102	60BB	E	3/8/85	ARPCS - NITROGEN SUPPLY
		R. I.	VS70-960102	60BC	E	3/8/85	ARPCS - OXYGEN PARTIAL PRESSURE CONTROL
		R. I.	VS70-960102	60BE	E	3/8/85	ARPCS - OXYGEN SYSTEM INSTRUMENTATION
		R. I.	VS70-960102	60BF	E	3/8/85	ARPCS - NITROGEN SYSTEM 1 & 2 INSTRUMENTATION
		R. I.	VS70-960102	60BG	E	3/8/85	ARPCS - CABIN PRESSURE CONTROL INSTRUMENTATION
		R. I.	VS70-960102	60DA	E	3/8/85	AECS - AIRLOCK ENVIRONMENTAL CONTROL SUBSYSTEM
		R. I.	VS70-960102	60DB	E	3/8/85	AECS - AIRLOCK ENVIRONMENTAL CONTROL SUBSYSTEM, PART 1
		R. I.	VS70-960102	60DC	E	3/8/85	AECS - AIRLOCK ENVIRONMENTAL CONTROL SUBSYSTEM, PART 2
		R. I.	VS70-960102	60DE	E	3/8/85	AECS - 02 EMERGENCY BREATHING
		R. I.	V070-613602		-	10/18/83	COVER - SENSOR, PP02, ASSY OF
		R. I.	V070-613130		G	4/18/82	ATMOSPHERIC REVITALIZATION PRESSURE CONTROL SYSTEM, CREW MODULE, INSTALLATION
		R. I.	V070-613156		D	5/6/83	PANEL ASSEMBLY - EMER BREATHING SYSTEM, MIDDECK
		R. I.	ME273-0126		F	6/20/85	UNION, FEMALE TO BRAZE/WELD, 17-4PH
		R. I.	V070-613103		A	9/22/77	PANEL - 02 TEST PORT
		R. I.	V594-613101		A	2/9/83	RESTRICTOR ASSY - EMERGENCY OXYGEN FLOW, CREW
		R. I.	ME251-0011		B	1/30/84	RESTRICTOR, OXYGEN, FLOW
		R. I.	V594-613102		A	2/10/83	TUBE ASSY. - RESTRICTOR, OXYGEN FLOW
		R. I.	V594-613103		A	2/10/83	TUBE - RESTRICTOR, OXYGEN FLOW
		R. I.	MD273-0025		B	3/15/84	UNION, BRAZED, CRES TUBE
		R. I.	MD273-0026		C	10/3/83	PREFORM, BRAZING ALLOY GOLD BASE
		R. I.	VS70-610106		-	3/28/88	SCHEMATIC DIAGRAM - ATMOSPHERIC REVITALIZATION SUBSYSTEM (OV-105 ONLY)
		R. I.	M072-643300		C	9/23/86	AIRLOCK IN ECLSS PROVISIONS TECH ORDER INSTL
		R. I.	VS70-613205			2/25/85	ATMOSPHERIC REVITALIZATION PRESSURE CONTROL SUBSYSTEM
		R. I.	VS70-613203		A	12/7/82	ATMOSPHERIC REVITALIZATION PRESSURE CONTROL SUBSYSTEM
		R. I.	V070-634465		G	2/5/87	MID-FUS SUBSYSTEM, ECLSS INSTL - FRAME X_a693 THRU X_a807
		R. I.	VS70-610209		E	5/2/84	SCHEMATIC DIAGRAM - ATMOSPHERE REVITALIZATION & PRESSURE CONTROL SYSTEM
		R. I.	V070-614100		B	6/26/84	OXYGEN RESTRICTOR, MID FUSELAGE, ASSEMBLY OF
6.2	ARS AIR	R. I.	VS70610109	ALL	E	3/23/88	SCHEMATIC DIAGRAM - ATMOSPHERE REVITALIZATION SUBSYSTEM
		R.I.	VS70-610102	ALL	J	3/8/88	SCHEMATIC DIAGRAM- ATMOSPHERE REVITALIZATION SUBSYSTEM
		R.I.	V070-613525	ALL	NONE	07/16/82	MUFFLER - SOUND ATTENUATION. INERTIAL MEASUREMENT UNIT INSTALLATION. ECLSS
		R.I.	V070-613552	ALL	B	4/7/88	FAM, MT EXCHR AND DUCTING INSTALLATION - IMU COOLING, ECLSS
		R.I.	V070-613400	ALL	D	5/18/88	DUCTING INSTALLATION - AVIONICS BAY'S I, II, & III, ECLSS
		R.I.	V070-613780	ALL	D	7/21/88	DUCTING INSTALLATION - AIR RETURN, FLIGHT DECK, ECLSS
		R.I.	V070-613760	ALL	D	5/24/85	DUCTING INSTALLATION AIR SUPPLY, FLIGHT DECK, ECLSS
		R.I.	V070-613650	ALL	B	07/31/85	DUCTING INSTALLATION - RETURN AIR, ECLSS BAY & MIDDECK
		R.I.	V070-613724	ALL	E	05/23/80	DUCTING INSTALLATION - SUPPLY AIR, ECLSS BAY & MIDDECK
		R.I.	V070-613170	ALL	A	10/29/84	DUCTING INSTALLATION - SLEEP STATION, ECLSS, AIR COOL ING DUCT AND DIFFUSER, MIDDECK

DWG	SIGNATURE		DATE
6.1	ENGR M. FITZPATRICK		
	ENGR		10/1/90
6.2	ENGR (N. PAPAILA		
	ENGR		10/1/90
	APP		10/1/90
	APP		
	LTR E	PCN	

NATIONAL AERONAUTICS AND SPACE ADMINISTRATION
LYNDON B. JOHNSON SPACE CENTER HOUSTON, TEXAS

VENDOR DRAWING REFERENCES

SPACE SHUTTLE | TBL NO 6-I

ALL

PAGE 6.I-1 | SHEET 1 OF 9

BASIC REV E

FOR DETAILED COMPONENT AND LOGIC INFORMATION REFER TO:

SSSH DWG NO.	SSSH DWG TITLE	VENDOR NAME	VENDOR DWG NO.	VENDOR SHEET NO.	REV	DATE	VENDOR DRAWING TITLE
6.3	AIRLOCK/ECLSS INTERFACES	R.I.	V075-64300				ECLSS A/L PANEL
		R.I.	V075-643021				PANEL-CLOSEOUT, A/L, ECLSS
		R.I.	V075-643022				PANEL-02 AND LCG, A/L, ECLSS, ASSY OF
		R.I.	V075-643024				PANEL ASSY-02 AND LCG, A/L, ECLSS
		R.I.	V075-643025				PANEL ASSY-H20, A/L, ECLSS
		R.I.	V075-730010				PANEL INSTALLATION-A/L, DISPLAYS AND CONTROLS
		R.I.	V075-730150				PANEL ASSY-AW18D, A/L, DISPLAYS AND CONTROLS
		R.I.	V075-730151				PANEL ASSY-AW18H, A/L, DISPLAYS AND CONTROLS
		R.I.	V075-730152				PANEL ASSY-AW18A, A/L, DISPLAYS AND CONTROLS
		R.I.	V075-730153				PANEL ASSY-AW82D, A/L, DISPLAYS AND CONTROLS
		R.I.	V075-740002				CABLE INSTL-COAX, ANTENNA UHF, EVA A/L
		R.I.	V075-750001				INSTR INSTL-DFI, A/L
		R.I.	M072-643300				AIRLOCK/ECLSS PROVISIONS
		R.I.	M072-643501				AIR SUPPLY DUCTING, AIRLOCK/TUNNEL ADAPTER, TECH ORDER INSTL. SPACEHAB
		R.I.	V075-750001				INSTRUMENTATION INSTL OF1, AIRLOCK
		R.I.	V519-634110				DUCT - AIRLOCK, AIR SUPPLY TUNNEL ADAPTER ASSY
		R.I.	M072-643500				ECLSS, ASSY, TUNNEL ADAPTER MV0519A TECH ORDER INSTALLATION
		IMPQUA	SV767709			2/7/85	BACTERIA FILTER
		HS	SV771717				CONDENSATE WATER REGULATOR
		HS	SV772190				WATER SUPPLY PRESSURE REGULATOR
		HS	SV778504				OXYGEN FILTER AND ORIFICE
		HS	SV784967				BACTERIA CARTRIDGE
		HS	SV784959				POTABLE WATER FILTER
		HS	SV771763				POTABLE WATER FILTER

DWG	SIGNATURE		DATE
6.3	ENGR S. DOERING		
	ENGR Stephen Doering		10/13/93
	ENGR		
	ENGR		
	APP		
	APP		
	LTR E	PCN 3	

NATIONAL AERONAUTICS AND SPACE ADMINISTRATION
LYNDON B. JOHNSON SPACE CENTER HOUSTON, TEXAS

VENDOR DRAWING REFERENCES

SPACE SHUTTLE | TBL NO 6-I
ALL

BASIC REV E-3

FOR DETAILED COMPONENT AND LOGIC INFORMATION REFER TO:

SSSH DWG NO.	SSSH DWG TITLE	VENDOR NAME	VENDOR DWG NO.	VENDOR SHEET NO.	REV	DATE	VENDOR DRAWING TITLE
6.4	SUPPLY WATER STORAGE	R. I.	VS70-623103	ALL	B	8/6/79	SCHEMATIC - ECLSS WATER MANAGEMENT SYSTEM
		R .I.	VS70-620309	ALL	E	3/7/89	SCHEMATIC DIAGRAM-WATER MANAGEMENT SUBSYSTEM
		R. I.	VS70-620302	ALL	J	12/6/83	SCHEMATIC DIAGRAM-WATER MANAGEMENT SUBSYSTEM
		R. I.	VS70-640109	ALL	B	6/2/83	SCHEMATIC DIAGRAM-AIRLOCK ENVIRONMENT CONT SUBSYSTEM
		R. I.	VS70-640102	ALL	E	8/16/80	SCHEMATIC-ACTIVE THERMAL CONTROL SUBSYSTEM
		R. I.	VO70 454936	ALL	F	11/2/87	FUEL CELL WATER RELIEF ALTERNATE PATH
		R. I.	VO70623300	ALL	C	8/4/87	INSTALLATION-ON2 PRESSURE/VENT PANEL, MIDDECK WATER MANAGEMENT SYSTEM
		R. I.	VS70-623201	ALL	C	8/8/79	HYDROGEN SEPARATOR AND TANK INSTL-POTABLE WATER, EXLSS EQUIP BAY
		R. I.	VO70-634460	ALL	H	6/15/88	MID-FUS SYBSYSTEM ECLSS INSTL-FRAME $X_0$582 THRU $X_0$693
		R. I.	VO70-623200	ALL	L	3/30/93	SYSTEM INSTALLATION - WATER MANAGEMENT, ECLSS EQUIPMENT BAY
6.5	WMS	R. I.	VS70-620202	ALL	L	11/20/89	SCHEMATIC DIAGRAM - WASTE MANAGEMENT SUBSYSTEM
		R. I.	VS70-620209	ALL	G	11/21/89	SCHEMATIC DIAGRAM - WASTE MANAGEMENT SUBSYSTEM
		R. I.	VO70-623200	ALL	J	3/10/88	SYSTEM INSTALLATION - WATER MANAGEMENT, ECLSS EQUIPMENT BAY
		R. I.	VO70-623300	ALL	C	3/4/87	INSTALLATION - GN2 PRESSURE/VENT PANEL, MIDDECK WATER MANAGEMENT SUSTEM
		R. I.	VS70-634460	ALL	H	6/15/88	MID-FUS SUBSYSTEM ECLSS INSTL-FRAME X_0 582 THRU X_0 693
		R. I.	VO70-623201	ALL	A	5/27/88	HYDROGEN SEPARATOR AND TANK INSTL-POTABLE WATER, ECLSS EQUIP BAY
		GE	630717539	ALL	A	06/21/85	WASTE COLLECTOR SUBSYSTEM SCHEMATIC

DWG	SIGNATURE	DATE	DWG	SIGNATURE	DATE
6.4	ENGR J. SOLOMON			ENGR	
	ENGR Jan M. Solomon	9/26/94		ENGR	
6.5	ENGR S. TRIPODI			ENGR	
	ENGR Stephen V. Tripodi	9/22/94		ENGR	
	ENGR			APP	
	ENGR			APP	
	ENGR			APP	
	ENGR			LTR E PCN 4	

NATIONAL AERONAUTICS AND SPACE ADMINISTRATION
LYNDON B. JOHNSON SPACE CENTER HOUSTON, TEXAS

VENDOR DRAWING REFERENCES

SPACE SHUTTLE | TBL NO 6-I
ALL

BASIC REV E-4

FOR DETAILED COMPONENT AND LOGIC INFORMATION REFER TO:

SSSH DWG NO.	SSSH DWG TITLE	VENDOR NAME	VENDOR DWG NO.	VENDOR SHEET NO.	REV	DATE	VENDOR DRAWING TITLE
6.6	REPACKAGED GALLEY	NASA	SED39121058			9/24/90	SHUTTLE ORBITER REPACKAGED GALLEY
		NASA	SED39121045			9/19/90	INTERCONNECTION DIAGRAM, ORBITER GALLEY
		NASA	SED39120917		A	9/14/90	SCHEMATIC DIAGRAM, OVEN ASSEMBLY (A5) ORBITER GALLEY
		NASA	SED39121032			7/18/90	SCHEMATIC DIAGRAM, POWER ASSEMBLY (A6) ORBITER GALLEY
		NASA	SED39120899		B	7/6/90	WATER TANK ASSY - HOT WATER SYSTEM, GALLEY
		NASA	SED39121035		E	7/26/90	PLUMBING INSTL - GALLEY
		NASA	SED39121038			7/18/90	SCHEMATIC DIAGRAM, WATER HEATER ASSY (A7) ORBITER GALLEY

DWG	SIGNATURE	DATE	DWG	SIGNATURE	DATE
6.6	ENGR S. TRIPODI			ENGR	
	ENGR Stephen Tripodi	9/24/94		ENGR	
	ENGR			ENGR	
	ENGR			ENGR	
	ENGR			APP	9/26/94
	ENGR			APP	
	ENGR			APP	
	ENGR			LTR E	PCN 4

NATIONAL AERONAUTICS AND SPACE ADMINISTRATION
LYNDON B. JOHNSON SPACE CENTER HOUSTON, TEXAS

VENDOR DRAWING REFERENCES

SPACE SHUTTLE | TBL NO 6-I

ALL

BASIC REV E-4

FOR DETAILED COMPONENT AND LOGIC INFORMATION REFER TO:

SSSH DWG NO.	SSSH DWG TITLE	VENDOR NAME	VENDOR DWG NO.	VENDOR SHEET NO.	REV	DATE	VENDOR DRAWING TITLE
6.8	ECLSS INSTRUMENTATION	R. I.	VS70-630109		H01	7/15/88	SCHEMATIC DIAGRAM- ACTIVE THERMAL CONTROL SUBSYSTEM
		R. I.	VS70-630102		V01	7/21/87	SCHEMATIC DIAGRAM- ACTIVE THERMAL CONTROL SUBSYSTEM
		R. I.	VS70-610109		E01	4/23/88	SCHEMATIC DIAGRAM- ATMOSPHERIC REVITALIZATION SUBSYSTEM
		R. I.	VS70-610102		J01	4/15/88	SCHEMATIC DIAGRAM- ATMOSPHERIC REVITALIZATION SUBSYSTEM
		R. I.	VS70-750209		H01	3/11/88	SCHEMATIC DIAGRAM- OI POWER AND CONTROL
		R. I.	VS70-750202		K01	3/10/88	SCHEMATIC DIAGRAM- OI POWER AND CONTROL
		R. I.	VS70-960099	60FY	A12	12/28/88	ATC FREON COOLANT LOOP 1 INSTRUMENTATION PART 1
		R. I.	VS70-960099	60FX	A12	12/28/88	ATC FREON COOLANT LOOP 2 INSTRUMENTATION PART 1
		R. I.	VS70-960099	60CJ	A12	12/28/88	ARS AVIONICS BAY 1 FAN CONTROL AND INSTRUMENTATION
		R. I.	VS70-960099	60CK	A12	12/28/88	ARS AVIONICS BAY 2 FAN CONTROL AND INSTRUMENTATION
		R. I.	VS70-960099	60CL	A12	12/28/88	ARS AVIONICS BAY 3 FAN CONTROL AND INSTRUMENTATION
		R. I.	VS70-960099	60CS	F03	9/19/87	ARS WATER COOLANT LOOP 1 INSTRUMENTATION PART II
		R. I.	VS70-960099	60CT	F03	9/19/87	ARS WATER COOLANT LOOP 2 INSTRUMENTATION PART II
		R. I.	VS70-960099	60CC	F03	9/19/87	ARS HUMIDITY CONDENSATE WATER SEPARATOR
		R. I.	VS70-960099	60CM	F03	9/19/87	ARS CABIN AIR CIRCULATION INSTRUMENTATION
		R. I.	VS70-960099	60CH	F03	9/19/87	ARS IMU COOLING
		R. I.	VS70-960102	60FV	F03	10/18/85	ATC FREON COOLANT LOOP 1 INSTRUMENTATION PART 1
		R. I.	VS70-960102	60FX	F03	10/18/85	ATC FREON COOLANT LOOP 2 INSTRUMENTATION PART 1
		R. I.	VS70-960102	60CJ	F04	8/31/89	ARS AVIONICS BAY 1 FAN CONTROL AND INSTRUMENTATION
		R. I.	VS70-960102	60CK	F04	9/8/89	ARS AVIONICS BAY 2 FAN CONTROL AND INSTRUMENTATION
		R. I.	VS70-960102	60CL	F04	9/12/89	ARS AVIONICS BAY 3 FAN CONTROL AND INSTRUMENTATION
		R. I.	VS70-960102	60CS	F03	10/18/85	ARS WATER COOLANT LOOP 1 INSTRUMENTATION PART II
		R. I.	VS70-960102	60CT	F03	10/18/85	ARS WATER COOLANT LOOP 2 INSTRUMENTATION PART II
		R. I.	VS70-960102	60CC	F03	10/18/85	ARS HUMIDITY CONDENSATE WATER SEPARATOR
		R. I.	VS70-960102	60CM	F04	9/14/89	ARS CABIN AIR CIRCULATION INSTRUMENTATION
		R. I.	VS70-960102	60CH	F03	10/18/85	ARS IMU COOLING

DWG	SIGNATURE	DATE	NATIONAL AERONAUTICS AND SPACE ADMINISTRATION LYNDON B. JOHNSON SPACE CENTER HOUSTON, TEXAS
6.8	ENGR P. LAMCZYK		
	ENGR Philip C. Lamczyk	10/1/90	VENDOR DRAWING REFERENCES
	ENGR		
	ENGR		
	APP Mark J. Fleming	10/26/90	
	APP		SPACE SHUTTLE / TBL NO 6-I
	OMNIPLAN		ALL
	LTR E / PCN		PAGE 6.I-5 / SHEET 5 OF 9

BASIC REV E

FOR DETAILED COMPONENT AND LOGIC INFORMATION REFER TO:

SSSH DWG NO.	SSSH DWG TITLE	VENDOR NAME	VENDOR DWG NO.	VENDOR SHEET NO.	REV	DATE	VENDOR DRAWING TITLE
6.9, 6.10	EMU INTEGRATED SYSTEM SCHEMATIC, EMU ELECTRICAL SCHEMATIC	HS	SV789200		A	10/27/88	PRIMARY LIFE SUPPORT SUBSYSTEM
		BRUNSWICK/ ARDE	SV778895/ SV784099				PRIMARY OXYGEN BOTTLE
		CONRAC/ GULTON	SV778528				PRIMARY OXYGEN PRESSURE SENSOR
		CARELTON CONTROLS	SV778873				PRIMARY PRESSURE CONTROL MODULE CHECK VLV FLOW RESTRICTOR SHUTOFF VLV SUIT PRESSURE REGULATOR WATER TANK PRESSURE REGULATOR
		CONRAC/ GULTON	SV767788				SUIT PRESSURE SENSOR (psid)
		HS	SV778540				SHEAR PLATE ASSY
		MICROSWITCH	SV789111				EVA POSITION SWITCH
		HS	SV785844				DUAL MODE RELIEF VLV BLEED ORIFICE DUAL MODE RELIEF VLV FEEDWATER CHECK VLV
		HS	SV771836				FLOW RESTRICTOR UNIT
		SENSORMEDICS	SV767798				VENT FLOW SENSOR
		HS	SV787994				CARBON DIOXIDE SENSOR FAN/PUMP/WATER SEPARATOR ASSY FAN ROTARY WATER SEPARATOR WATER PUMP BRUSHLESS MOTOR
		HS/MAG TECH	SV785900				PITOT ACTUATED VLV
		HS	SV769480				CO2 TRANSDUCER FILTER AND ORIFICE
		HS	SV772158				CHECK VLV
		HS	SV784996				PUMP INLET FILTER
		HS	SV778543				CHECK VLV AND HOUSING
		HS	SV767699				PRIMARY WATER TANK #1
		HS	SV769592				FEEDWATER SUPPLY PRESSURE SENSOR OXYGEN SIDE WATER SIDE
		CONRAC/ GULTON	SV767793-5,-7				CONDENSATE WATER RELIEF VLV
		HS	SV769403				FEEDWATER RELIEF VLV
		HS	SV769404				FEEDWATER PRESSURE REGULATOR
		HS	SV792528				FEEDWATER SHUTOFF VLV
		ECKEL	SV767660-5,-4				FEEDWATER PRESSURE SENSOR
		CONRAC/ GULTON	SV767793-6,-8				SUBLIMATOR AND HARNESS
		HS	SV792500				TEMPERATURE SENSOR HARNESS
		RDF	SV792503				SUBLIMATOR
		HS	SV783850				GAS TRAP
		HS	SV784943				WATER RELIEF VLV
		HS	SV769405				WATER CHECK VLV
		HS	SV769406				RELIEF VLV AND ORIFICE
		HS	SV785860				POSITIVE PRESSURE RELIEF VLV
		AIR-LOCK	SV787036				NEGATIVE PRESSURE RELIEF VLV
		AIR-LOCK	SV785927				RESERVE WATER TANK
		HS	SV769592				CAUTION AND WARNING
		HS	SV785970				ELECTRICAL POWER HARNESS
		HS	SV789151				ELECTRICAL SIGNAL HARNESS
		HS	SV789152				CAUTION AND WARNING HARNESS
		HS	SV789153				FIBER OPTIC CONVERTER AND CONNECTOR
		HS	SV777266				REAL -TIME DATA SYSTEM HARNESS
		HS	SV789134				PLSS/SOP THERMAL COVER
		ILC	SV772168				PRIMARY WATER TANK #2
		HS	SV769592				MUFFLER
		HUGHES/ TRIETLER/HS	SV785890				COOLANT ISOLATION VLV ASSY
		HS	SV784998				WATER SHUTOFF VLV
		ECKEL	SV784982				COOLANT RELIEF VLV
		HS	SV784985				SIGNAL CONDITIONER (RTDS)
		HS	SV791230				COMMUNICATIONS CARRIER ASSY (CCA)
		ILC	0101-10001		N	11-21-85	HARD UPPER TORSO (HUT)
		ILC	0102-10002		BL	2-6-88	HARD TORSO SHELL
		ILC					EXTRA SMALL
		ILC	SV772325				SMALL
		ILC	SV772335				MEDIUM
		ILC	SV772345				LARGE
		ILC	SV772375				EXTRA LARGE
		ILC	SV772385				

DWG	SIGNATURE		DATE	NATIONAL AERONAUTICS AND SPACE ADMINISTRATION LYNDON B. JOHNSON SPACE CENTER HOUSTON, TEXAS	
6.9	ENGR S. BLEISATH				
	ENGR Scott A Bleisath		11-1-90	VENDOR DRAWING REFERENCES	
6.10	ENGR C. LOWERY				
	ENGR C. Lowery		11-2-90		
	APP		6 Nov 90		
	APP R T Neal		11/6/90	SPACE SHUTTLE	TBL NO 6-I
	OMNIPLAN			ALL	
	LTR E	PCN			PAGE 6.I-6 SHEET 6 OF 9

BASIC REV E

FOR DETAILED COMPONENT AND LOGIC INFORMATION REFER TO:

SSSH DWG NO.	SSSH DWG TITLE	VENDOR NAME	VENDOR DWG NO.	VENDOR SHEET NO.	REV	DATE	VENDOR DRAWING TITLE
6.9, 6.10 (CONT'D)		ILC	0103-10003		AW	3-26-87	ARMS
		ILC	0103-84025				UPPER ARM ASSY
		ILC	0103-84026				LOWER ARM ASSY
		ILC	0104-10004		CE	10-19-87	LOWER TORSO ASSY
		ILC	0104-82347				WAIST RESTRAINT/BLADDER ASSY
		ILC	0104-84402				WAIST RESTRAINT/BLADDER ASSY
		ILC	0104-84811				WAIST RESTRAINT AND BLADDER
		ILC	0104-82692				WAIST TMG
		ILC	0104-84386				WAIST TMG
		ILC	0104-84905				WAIST TMG
		ILC	0104-84027				TROUSER
		ILC	0104-84028				BOOT ASSY
		ILC	0104-82664				BOOT SIZING INSERT
		ILC	9785, 9787 9789,9791				BODY SEAL CLOSURE
		ILC	9698,9699, 9714				WAIST BEARING
		ILC	0105-10005		T	10-19-87	HELMET
		ILC	0106-10006/ 1600		BJ K	12-8-87 10-19-87	GLOVES
		ILC	0107-10007		AU	2-19-85	LIQUID COOLING AND VENT GARMENT (LCVG)
		ILC	0107-81057				BOOT LEG VENT DUCT
		ILC	0107-84029				GARMENT ASSY
		ILC	0108-10008		W	09-24-86	EXTRAVEHICULAR VISOR ASSY
		ILC	0110-10010		AF	10-19-87	IN SUIT DRINK BAG
		HS	SV767710		E	10-4-88	SECONDARY OXYGEN PACK
		FANSTEEL	SV778880				SECONDARY OXYGEN BOTTLE
		CARELTON CONTROLS	SV778475				SOP PRESSURE CONTROL MODULE
		KULITE	SV778473				SOP PRESSURE TRANSDUCER
		HS	SV792294		A	10-4-88	DISPLAYS AND CONTROLS MODULE
		KRATOS	SV767706				SUIT PRESSURE GAUGE
		AIR-LOCK	SV787027				PURGE VLV
		HS	SV789693				TEMP CONTROL VLV
		AIR-LOCK	SV778872-10				COMMON MULTIPLE CONNECTOR
		HS	SV792294				ELECTRONIC ASSY
		LITTON	SV767784				VOLUME CONTROL
		LITTON	SV767785				DISPLAY INTENSITY CONTROL
		ARMTEC	SV767786				EVC MODE SELECTION SWITCH
		HEWLETT PACKARD	SV789695				BITE INDICATOR
		HS	SV792293				INTERNAL WIRING ASSY
		HS	SV774161				EXTERNAL WIRING ASSY
		HAYDON	SV778596				POWER MODE SELECTION SWITCH
		ARMTEC	SV767794				PUSH TO TALK SWITCH
		ARMTEC	SV771887-2				FAN SWITCH
		ARMTEC	SV767795-2				FEEDWATER VALVE SWITCH
		ARMTEC	SV767792				CAUTION AND WARNING SYSTEM SWITCH
		HEWLETT	SV791145				ALPHANUMERIC DISPLAY (LCD)
		HS	SV779301				OXYGEN, WATER MANIFOLD ASSY
		ILC	SV771987-11				DCM THERMAL COVER
		HS	SV767730			2-7-85	SERVICE AND COOLING UMBILICAL
		AIR-LOCK	SV778872-11				COMMON MULTIPLE CONNECTOR
		TITEFLEX	SV778865				O2 HIGH PRESSURE LINE
		TITEFLEX	SV771722				WATER LINE
		TITEFLEX					POTABLE WATER LINE
		TITEFLEX					COOLING WATER LINE
		TITEFLEX					COOLING WATER OUT-LINE
		IMPQUA	SV767709				BACTERIA FILTER
		HS	SV771717				CONDENSATE WATER REGULATOR
		HS	SV772190				WATER SUPPLY PRESSURE REGULATOR
		HS	SV778504				OXYGEN FILTER AND ORIFICE
		HS	SV784967				BACTERIA CARTRIDGE
		HS	SV784959				POTABLE WATER FILTER
		HS	SV771763				SCU ELECTRICAL HARNESS
		DEUTSCH	SV764255				VEHICLE ELECTRICAL CONNECTOR
		GLENAIR	SV787944				CONNECTOR BACKSHELL
		AIRCLOCK	SV785003				SCU ELECTRICAL CONNECTOR
		GFP	SV771749				SHEATH ASSY
		GFP	SV729617				SHEATH HOOK
		GFP	SV772134				TETHER SHACKLE
		HS	SV767690				EMU ELECTRICAL HARNESS (EEH)
		HS	SV767680				AIRLOCK ADAPTER
		HS	SV792600		J	11-30-87	CONTAMINANT CONTROL CARTRIDGE (CCC)

DWG	SIGNATURE		DATE	NATIONAL AERONAUTICS AND SPACE ADMINISTRATION LYNDON B. JOHNSON SPACE CENTER HOUSTON, TEXAS	
6.9	ENGR	S. BLEISATH			
	ENGR	Scott A Bleisath	11-1-90		
6.10	ENGR	C. LOWERY		VENDOR DRAWING REFERENCES	
	ENGR	C. Lowery	11-2-90		
	APP		6 Nov 90		
	APP	RT Neal	11/6/90	SPACE SHUTTLE	TBL NO 6-I
	OMNIPLAN			ALL	
	LTR E	PCN			PAGE 6.I-7 SHEET 7 OF 9

FOR DETAILED COMPONENT AND LOGIC INFORMATION REFER TO:

SSSH DWG NO.	SSSH DWG TITLE	VENDOR NAME	VENDOR DWG NO.	VENDOR SHEET NO.	REV	DATE	VENDOR DRAWING TITLE
6.9, 6.10 (CONC'D)		YARDNEY	SV767789 SVSK94600		F	10-21-86	BATTERY DCM: ELECTRICAL SCHEMATIC DRAWING (BLUE PRINT)
		HS	SV792740 SV792695 SV792696		G	8-31-88	BENDS TREATMENT ADAPTER PRESSURE GAUGE PRESSURE RELIEF VALVE
6.11	MMU/FSS PROPULSION	MARTIN MARIETTA (M.M.)	ML2050				THERMAL HEATER, TEMP SENSOR ASSY.
		M. M.	MP0030				LINE ASSEMBLY
		M. M.	MP0035				LINE ASSEMBLY
		M. M.	MP0080				RH GAGE LINE ASSEMBLY
		M. M.	MP0085				LH GAGE LINE ASSEMBLY
		M. M.	MP0130				RH FWD TRIAD LINE ASSEMBLY
		M. M.	MP0135				LH FWD TRIAD LINE ASSEMBLY
		M. M.	MP0140				RH AFT TRIAD LINE ASSEMBLY
		M. M.	MP0145				LH AFT TRIAD LINE ASSEMBLY
		M. M.	MP0160				RH TOGGLE/GAGE TO TANK LINE ASSEMBLY
		M. M.	MP0165				LH TOGGLE/GAGE TO TANK LINE ASSEMBLY
		M. M.	MP0445				QUICK DISCONNECT ASSEMBLY
		M. M.	MP0170				FILTER/VALE ASSEMBLY
		M. M.	MP0175				PRESSURE TRANSDUCER ASSY
		M. M.	MP0260				RH TANK TO ISO VALVE LINE ASSY
		M. M.	MP0265				LH TANK TO ISO VALVE LINE ASSY
		M. M.	MP0270				TANK OUTLET ADAPTER ASSY
		M. M.	MP0280				RH MANIFOLD ASSEMBLY
		M. M.	MP0285				LH MANIFOLD ASSEMBLY
		M. M.	MP0368				GAGE DETAILS
		M. M.	MP0443				BRACKET
		M. M.	MT0131				SUPPORT BRACKET DETAILS
		M. M.	MT0150				UPPER SUPPORT BRACKET ASSY
		M. M.	ME2000				PRESSURE GAGE ILLUMINATION ASSY
		M. M.	MP0000				PROPULSION INSTALLATION
		M. M.	FP0000				FSS PROPULSION INSTALLATION
		M. M.	PD4800209				QUICK DISCONNECT
		M. M.	FP0034				TUBE ASSEMBLY
		M. M.	FP0092				TUBE
		M. M.	FP0099				FILTER THERMO SPACER
		M. M.	FP0110				TUBE ASSEMBLY

DWG	SIGNATURE	DATE	DWG	SIGNATURE	DATE
6.9	ENGR S. BLEISATH			ENGR	
	ENGR Scott A Bleisath	11-8-90		ENGR	
6.10	ENGR C. LOWERY			ENGR	
	ENGR C Lowery			ENGR	
6.11	ENGR S. BLEISATH			APP	15 Nov 90
	ENGR Scott A Bleisath	11-8-90		APP R T Neal	11/16/90
	ENGR			OMNIPLAN	
	ENGR			LTR E	PCN

NATIONAL AERONAUTICS AND SPACE ADMINISTRATION
LYNDON B. JOHNSON SPACE CENTER HOUSTON, TEXAS

VENDOR DRAWING REFERENCES

SPACE SHUTTLE | ALL

TBL NO 6-I

BASIC REV E

FOR DETAILED COMPONENT AND LOGIC INFORMATION REFER TO:

SSSH DWG NO.	SSSH DWG TITLE	VENDOR NAME	VENDOR DWG NO.	VENDOR SHEET NO.	REV	DATE	VENDOR DRAWING TITLE
6.12	RCRS	HS	-	-	-	3/15/91	HS CDR
		RI	VO70-730384	-	-	11/8/90	PANEL ASSEMBLY - M051F
		RI	VO70-733882	-	-	2/13/90	SCHEMATIC DIAGRAM D&C PANEL M051F
		RI	VS70-610302	-	-	2/3/90	SCHEMATIC DIAGRAM
6.13 (SHEETS 1 - 3)	WASTE MANAGEMENT SYSTEM	HS	SV805199	1	B	7/20/90	DRIVE, COMMODE COMPACTOR
			SV805318	1	B	8/16/90	COVER, CANISTER FILTER
			SV805319	1	B	7/18/89	FILTER, BACTERIA, PLENUM
			SV805321	1	C	1/23/90	MOTOR, URINE SEPARATOR
			SV805324	1	B	8/24/90	FILTER, ODOR/BACTERIA, URINAL
			SV805333	1	A	4/19/90	VALVE, CHECK, CAS
			SV805334	1	B	1/30/90	CHECK VALVE, DUAL
			SV805340	1	A	12/1/89	RETAINING RING, PLENUM
			SV805342	1	B	1/13/90	RING, NUT, CANISTER
			SV805357	1	-	12/21/89	SWITCH, LIMIT SENSITIVE
			SV805378	1	C	1/18/90	MOTOR ASSY, FAN
			SV805380	1	A	1/31/90	MOTOR ASSY, SEPARATOR
			SV805396	1	A	8/24/90	FILTER, ODOR/BACTERIA, COMMODE
			SV807455	1 - 3 OF 4	-	3/29/90	TUBE ASSEMBLY, TRANSPORT
			SV807470	1	-	6/20/90	RUNNER, PISTON
			SV807583	1	-	7/23/90	YOKE, SLIDE
			SV809710	1	-	-	TUBE, TRANSPORT
			SVL16993	1 - 4 OF 4	A	9/15/89	SEPARATOR, URINE
			SVL16995	3 - 5 OF 5	B	10/20/89	TRANSPORT TUBE ASS'Y
			SVL16995	1 - 6 OF 6	-	10/21/89	COMMODE INLET, BAG, SEAT RETENTION
			SVL17094	1	-	-	COMPACTOR ASS'Y, WCS
			SVL17094	2 - 3 OF 3	-	-	COMPACTOR DETAILS
			SVL17145	1 - 2 OF 2	D	2/15/90	STATIONARY TRANSPORT TUBE ASS'Y, WCS
			SVL17230	-	-	3/23/90	PISTON, COMPACTOR SUBASS'Y
			SVL17230	1	A	3/26/90	PISTON, COMPACTOR SUBASS'Y
			SVL17282	1 OF 1	B	-	URINE SEP GSE TUBING
			SVL17297	1	-	7/31/90	SEAT & LID ASS'Y WCS
			SVL17363	1	-	-	PLUMBING, URINAL INLET & OUTLET
			SVL17366	1	A	-	ODOR/BACTERIA FILTERS, URINE AND COMMODE - WASTE COLLECTION SUBSYSTEM
			SVL17367	-	-	-	COMMODE TUBES

DWG	SIGNATURE		DATE
6.12	ENGR P. LAMCZYK		
	ENGR		2/17/93
6.13	ENGR S. TRIPODI		
	ENGR		2/17/93
	APP		2/19/93
	APP		
	OMNIPLAN		
	LTR E	PCN 2	

NATIONAL AERONAUTICS AND SPACE ADMINISTRATION
LYNDON B. JOHNSON SPACE CENTER HOUSTON, TEXAS

VENDOR DRAWING REFERENCES

SPACE SHUTTLE	TBL NO 6-I
ALL	
	PAGE 6.I 9 — SHEET 9 OF 9

BASIC REV E-2

DATE: 05/04/91	NAME: VSN	VERSION: BPT.11
DATE: 09/17/91	NAME: MAG	VERSION: INK.8
DATE: 10/21/91	NAME: JDF	VERSION: INK.9

FLASH EVAP SUBSYSTEM
SEE DRAWING NO. 7.3

V63 T1207A (V63T1407A) (OA3) OA2 OA2 (OA3)
FCL 1 EVAP OUT TEMP
25 TO 130° F
1 S/S
C&W

0.718" ID

FLOW RATE ≈ 88% OF TOTAL FLOW

FLOW RATE ORIFICE-0.24" ID ≈ 12% OF TOTAL FLOW

CONDITIONED O_2 REQUIREMENTS
TEMP 0 TO 70° F
FLOW 0 TO 23.9 LB/HR

OXYGEN RESTRICTOR

OXYGEN SYSTEM 1 (FCL 2 HAS TWO-12.5 LB/HR O_2 RESTRICTORS, BOTH CONDITION OXYGEN SYSTEM 2)

O_2 INLET CONDITIONS
TEMP -280 TO 220° F

V63 R1105A (V63R1305A) (OA3) OA1 N/A
FCL 1 (2) COLD PLATE NETWORK FLOW RATE
100 TO 500 LB/HR
1 S/S
F

V_{MNC} APC6
$V_{CNTLCA1}$
RPC 5A
1A
FCL 2
NZ6 17.1

OV-102, 105 FCL 1 RPC 5A POWERED BY: MNB APCS AND CNTLBC2

AFT AVIONICS BAY 6 COLDPLATES

BAY 6 COLDPLATES: (MAX LD 665 W 2270 BTU/HR)
ULLAGE PRESS S/C NO. 3
AP S/C REAR
ASA NO. 3
DSC OA3
OA-3 MDM
FA-3 MDM
ATVC NO. 3
LA MDM
APU CONT NO. 3
ATVC NO. 4
MCA NO. 3
EIU NO. 3
LCA NO. 3
PCA NO. 6
PCA NO. 3
RJDA 2
ASA NO. 4
FA-4 MDM
RGA NO. 3,4

AFT AVIONICS BAY 5 COLDPLATES

BAY 5 COLDPLATES: (MAX LD 604 W 2061 BTU/HR)
ULLAGE PRESS S/C NO. 2
DSC OA2
ASA NO.. 2
PT SENS
DBIA NO.. 2
OA-2 MDM
MEC NO.. 2
FA-2 MDM
APU CONT NO.. 2 LCA NO. 2
ATVC NO. 2 PCA NO. 5
MCA NO. 2 PCA NO. 2
EIU NO. 2 RGA NO. 2

AFT AVIONICS BAY 4 COLDPLATES

BAY 4 COLDPLATES: (MAX LD 662 W 2260 BTU/HR)
ULLAGE PRESS S/C NO. 1
DBIA NO. 1
RJDA 1
ASA NO. 1
DSC OA1
FA-1 MDM
MEC NO. 1
OA-1 MDM
APU CONT NO. 1
ATVC NO. 1
MCA NO. 1
EIU NO.. 1
LCA NO. 1
PCA NO. 4
PCA NO. 1
RGA NO. 1

V63 T1206A OA3 OA3
FCL 1 AFT AVIONICS BAY 4 OUT TEMP
25 TO 130°F
1 S/S

V63 T1406A OA2 OA2
FCL 2 AFT AVIONICS BAY 4 OUT TEMP
25 TO 130°F
1 S/S

RGA 4 COLDPLATES 25 WATTS — FLOW RATE≈ 6% OF TOTAL FLOW
RGA 3 COLDPLATES 25 WATTS — FLOW RATE≈ 6% OF TOTAL FLOW
RGA 2 COLDPLATES 25 WATTS — FLOW RATE≈ 6% OF TOTAL FLOW
RGA 1 COLDPLATES 25 WATTS — FLOW RATE≈ 6% OF TOTAL FLOW
FCL 2

0.718" ID
0.437" ID

AC2 ΦA
FREON FLOW PROP 1(2)
PNL L4xN CB42 (CB45)
V_{AC20A} (AC30A)
3A

FLOW PROP VALVE LOOP 1(2)
ICH
PL
INTCHGR
PAYLOAD HX
PNL L1A2 S21 (S22)

(V63X1430E) (OF4) V63 X1230E OF4 N/A
FCL 1(2) FLOW PROP VALVE POSN INTCHGR
1=INTCHGR
1 S/S

(V63X1431E) (OF4) V63 X1231E OF4 N/A
FCL 1(2) FLOW PROP VALVE POSN P/L
1=P/L
1 S/S

FPV FILTERS
40μ NOMINAL
100μ ABSOLUTE

FLOW PROP VALVE
1.2K
$V_{CNTLAB3}$ (CNTLCA3)

0.718" ID

ECLSS SC1A(1B)
OZ7 6.8 (OZ4 6.8)

(V63R1303A) V63 R1103A (OF2) OF1
FCL 1(2) PAYLOAD HX FLOW RATE
0 TO 1300 LB/HR
1 S/S
F

PAYLOAD HEAT EXCHANGER

OZ7 6.8 ECLSS SC1A

V63 T1155A OF1
FCL 1 INTERCHANGER INLET TEMP
32 TO 68° F
1 S/S

OZ3 6.8 (OZ6 6.8) ECLSS SC1B(1A)

(V63R1300A) V63 R1100A (OF3) OF2 OF2 (OF3)
FCL 1(2) INTERCHANGER FLOW RATE
0 TO 2600 LB/HR
1 S/S
C&W

ARS INTERCHANGER HEAT EXCHANGER

H_2O LOOP 1
H_2O LOOP 2
48,300 BTU/HR MAX LOAD
FCL 2

FREON
EVAP OUT TEMP
FLOW
PPM 130 80 60 40 25 20 15 10 0 +0
0 TO 100
PNL 01 M2

FREON FLOW/EVAP OUT TEMP
FCL 2 TEMP
FCL 2 FLOW RATE
LOOP 1
LOOP 2
PNL 01 S4

YELLOW FREON LOOP
PNL FTA2
32 ≥ T ≥ 65° F
≤ 1200 LB/HR

C&W ELECTRONICS
FCL 1 TEMP
FCL 2 TEMP
FCL 2 FLOW RATE
FCL 1 FLOW RATE

AC1 (AC3)
FREON LOOP 1 (2)
V_{AC10A} (AC30A) PUMP A ΦA 3A PNL L4xM CB19 (CB25)
V_{AC10B} (AC30B) PUMP A ΦB 3A PNL L4xM CB20 (CB26)
V_{AC10C} (AC30C) PUMP A ΦC 3A PNL L4xM CB21 (CB27)

V63K1314N
GSE V63K1114N LF 1
$V_{PRE-FLT\ TEST}$ BUS 1A (PRE-FLT TEST BUS 2)
3A

(V63S1311E) (OF2) V63 S1111E OF1 OF1 (OF2)
FCL 1 (2) PMP A ON
1=ON
1 S/S
7.5K ΦA

FREON PUMP
LOOP 1 (2)
A OFF B
PNL L1A2 S23 (S24)

STARBOARD SIDE ≈ 6% TOTAL FLOW

(V63S1321E) V63 S1121E (OF3) OF2 OF2 (OF3)
FCL 1 (2) PMP B ON
1=ON
1 S/S
7.5K ΦA

AC2 (AC1)
FREON LOOP 1 (2)
V_{AC20A} (AC10A) PUMP B ΦA 3A PNL L4xM(N) CB22 (CB39)
V_{AC20B} (AC10B) PUMP B ΦB 3A PNL L4xM(N) CB23 (CB40)
V_{AC20C} (AC10C) PUMP B ΦC 3A PNL L4xM(N) CB24 (CB41)

$V_{MNB\ FLC2}$ (MNA FLC1)
V63K1324N
GSE V63K1124N LF 1
GPC V63K1124Y PL 2
DSM 9112 (5114)
3A

FCL 1 PUMP/ ACCUMULATOR PACKAGE

(V63P1308A) V63 P1108A (OF2) OF1
FCL 1 (2) PUMP INLET PRESS
0 TO 500 PSIA
1 S/S

(V63G1330A) V63 G1130A (OF1) OF2
FCL 1 (2) ACCUMULATOR QUANTITY
0 TO 100 PCT
1 S/S
F

ECLSS SC1B(1A)
OZ4 6.8 (OZ6 6.8)

6μ ABSOLUTE FILTER
380W MAX
61μ FILTER
BALL CHECK VLV
61μ ABSOLUTE FILTER
0.718" ID
25μ ABSOLUTE FILTER
GROUND ADJUSTABLE ORIFICE
ECLSS SC1A(1B)
OZ7 6.8 (OZ3 6.8)

FLOW RATE = 2600-2900 LB/HR 65-60 PSID | 30 | 2000-2227 LB/HR 50-46 PSID (Δ OF 23%) | 20

FLOW RATE RAD BYPASS ≈ 3.5 MINUTES FOR LOOP CIRCULATION
RAD FLOW ≈ 12.4 MINUTES FOR LOOP CIRCULATION

16. REFER TO TABLE 7-1 FOR DRAWING REFERENCES

15 HYD FLOW THRU HX DURING CIRC PUMP OPS WHEN HYD TEMP (105° F, BYPASS HX AT 115° F. HYDRAULIC RESERVOIR PRESSURE IS 60-65 PSIA

14 RADIATORS ARE CONSTRUCTED OF ALUMINIUM (6061-T6) HONEYCOMB. THE SURFACE IS SILVER-TEFLON COATED

13 NOMINAL PRESS LOOP 1 - 105 ± 5 PSIA
LOOP 2 - 90 ± 5 PSIA
LOOP VOLUME FOR FCL 1 (2)
(W/RADIATORS, W/O ACCUM) = 5150 IN^3
ACCUM AT 100% = 1659 IN^3
ACCUM AT 0% = 0 IN^3
RADIATOR (4 PANELS & HOSES) = 1445 IN^3

12 FES PERFORMANCE

PRI A OR PRI B CONDITION	DESIGN BTU/HR	DEV TEST BTU/HR MAX CAPABILITY
BOTH EVAPS/BOTH LOOPS	131 K	148.0 K
LOOP 1	67.5 K	92.8 K
LOOP 2	67.5 K	127.0 K
TOPPING/BOTH LOOPS	30 K	39.0 K
LOOP 1	N/A	24.6 K
LOOP 2	N/A	37.6 K

CONTINGENCY - SEC CONTROLLER

CONDITION	DESIGN BTU/HR	DEV TEST BTU/HR MAX CAPABILITY
HI LOAD/BOTH LOOPS	67.5 K	113 K
TOPPING/BOTH LOOPS	67.5 K	76.8 K

11. ALL ATCS PLUMBING CONSTRUCTED OF STAINLESS STEEL (CRES 21-6-9) WITH .016 INCH WALLS. LINE INSULATED WITH .25 INCH TG15000 AND STAINLESS STEEL FOIL EXCEPT LINES IN AFT BAYS 4,5,6, AND FLEX HOSES. HEAT EXCHANGERS ARE CONSTRUCTED OF STAINLESS STEEL. COLD PLATES ARE CONSTRUCTED OF ALUMINIUM. FLEX HOSES ARE 0.75 INCH ID METAL BELLOWS

10 OSL OF CAL CURVE
V63R1100A (1300A) 732.0
V63R1103A (1303A) 159.5
V63R1105A (1305A) -4.5
V63G1130A (1330A) -11.3
VALUES MAY DIFFER FROM VEHICLE TO VEHICLE

9 OV-102, 105 ONLY. OTHER VEHICLES WILL BE UPDATED DURING MAJOR MOD PERIODS

8 SPARE

7

LEG \ VLV POS	RAD FLOW PL	RAD FLOW PL	RAD FLOW ICH	RAD BYPASS PL	RAD BYPASS PL	RAD BYPASS ICH
	29K	21.5K		29K	21.5K	
PL	40%	22.4%	9.0%	40%	22%	8.9%
ICH	53%	69.5%	80.8%	53%	69%	81.3%

FLOW PROP VALVE SET AT 29K BTU OR 21.5K BTU PRELAUNCH. NOMINALLY IT IS SET IN 29K BTU POSITION (8 RAD PANEL). FPV IS A 2 POSITION SPOOL VLV

6 FCA CONTROLS TO 38 ± 2° F IN NORM, 57 ± 2° F IN HI

5 THE TURN ON SEQUENCE FOR THE FCA CONTAINS THE FOLLOWING STEPS:
T=0 A. BYPASS VALVE IS DRIVEN TO FULL BYPASS (OPEN POSITION) VIA A 5 SECOND OPEN COMMAND
FLOW CONTROL VALVE IS COMMANDED FOR 2304 PULSES ~ 82.6 SECONDS TO THE FULL HOT POSITION
T=90 SEC B. BYPASS VALVE RECEIVES A SECOND CLOSE COMMAND WHICH DRIVES IT TO THE RAD FLOW POSITION. FLOW CONTROL VALVE IS NOW CONTROLLING THE OUTLET TEMP

4 THE AMMONIA BOILER CAN REJECT A MAXIMUM OF 113,200 BTU/HR. THE PRV/GPC CONTROL POINT IS 35 ± 3°F. THE SEC/GN CONTROL POINT IS 34 ± 3°F

3 SPARE

2 DRIVER IS ACTUALLY FOUR DRIVERS - ONE FOR EACH OF THE FOUR STEPPING MOTOR COILS. MOTOR IS DRIVEN BY SEQUENTIALLY POWERING THE COILS. DIRECTION CONTROL IS OBTAINED BY VARYING THE SEQUENCE OF POWER APPLICATION TO THE INDIVIDUAL COILS

NOTES: 1 THE FCL INTERCHANGER FLOW RATE TRANSDUCER GOES THROUGH 2 SIGNAL CONDITIONERS. LOSS OF EITHER ONE WILL RESULT IN THE LOSS OF BOTH THE CRT AND THE METER BUT LOSS OF THE MDM WILL RESULT IN THE LOSS OF THE CRT ONLY

*1 ATCS 1

SIGNATURE		DATE	
DSGN	LINDA DUMIS	10/31/78	NATIONAL AERONAUTICS AND SPACE ADMINISTRATION LYNDON B. JOHNSON SPACE CENTER HOUSTON, TEXAS
DR	VIC. ORTIZ	04/04/79	
ENGR	Margaret Langley 10/21/91		ACTIVE THERMAL CONTROL SYSTEM- FREON COOLANT LOOP 1, 2
ENGR			
APP	Mark J. Franz 10/22/91		SPACE SHUTTLE — DWG NO 7.1
APP			ALL
OMNIPLAN S.A. Kimbrell		10-24-91	121 X 34 — PAGE — SHEET 1 of 2
LTR E	PCN 1		

BASIC REV E-1

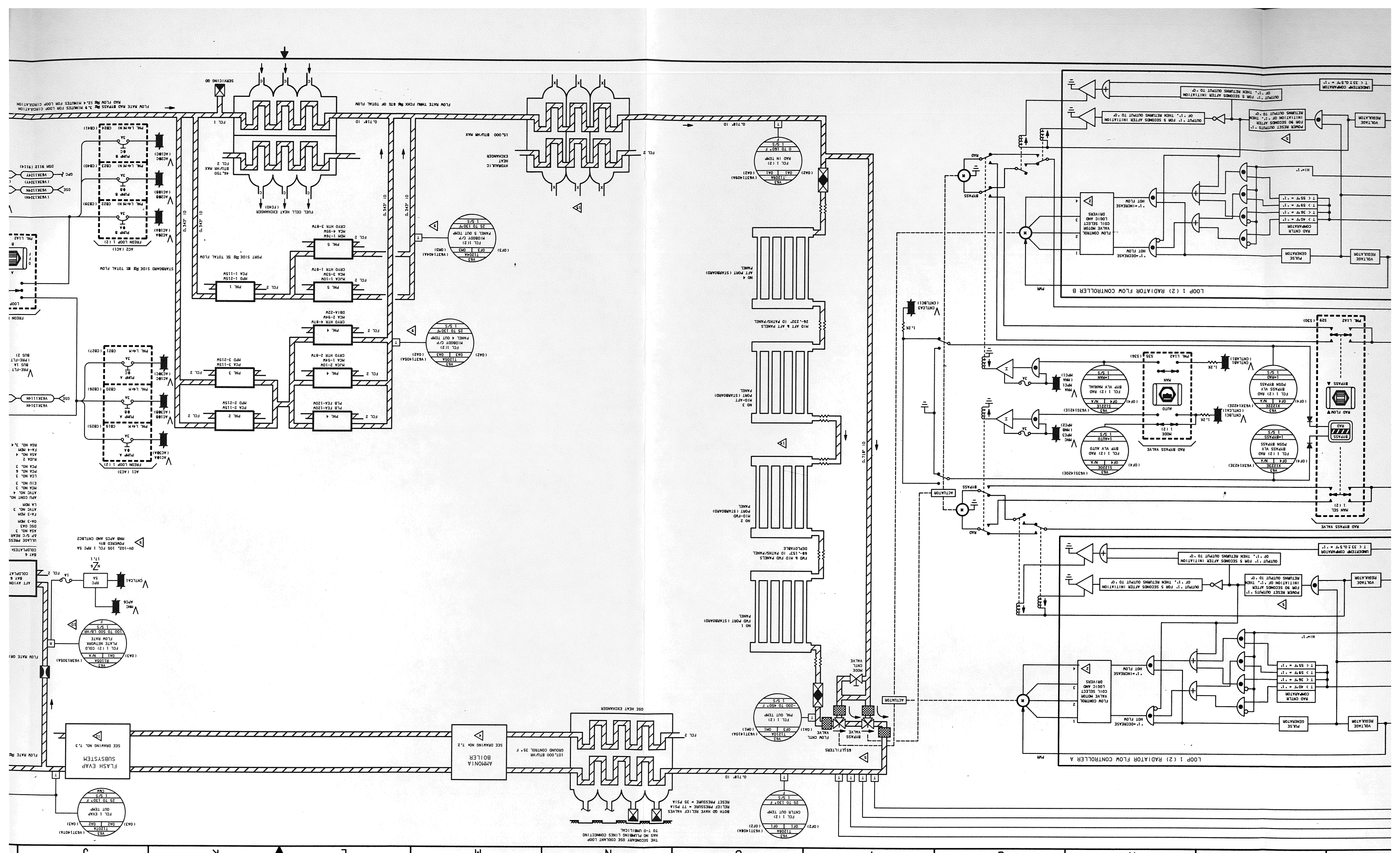
LOOP 1 (2) RADIATOR FLOW CONTROLLER A
LOOP 1 (2) RADIATOR FLOW CONTROLLER B
RAD BYPASS VALVE
FLASH EVAP SUBSYSTEM
SEE DRAWING NO. 7.2
AMMONIA BOILER
SEE DRAWING NO. 7.2
OSE HEAT EXCHANGER
FUEL CELL HEAT EXCHANGER
FREON LOOP 1 (2)
ACT (AC3)
ACT (AC4)
STARBOARD SIDE ≈ 8% TOTAL FLOW
PORT SIDE ≈ 5% TOTAL FLOW
FLOW RATE THRU PUMP ≈ 87% OF TOTAL FLOW
FLOW RATE RAD BYPASS ≈ 3.9 MINUTES FOR LOOP CIRCULATION
RAD FLOW ≈ 12.4 MINUTES FOR LOOP CIRCULATION
15,000 BTU/HR MAX
46,750 BTU/HR MAX
0.718" ID
0.345" ID
THE SECONDARY OSE COOLANT LOOP HAS NO PLUMBING LINES CONNECTING TO T-O UMBILICAL
BOTH GO HAVE RELIEF VALVES RELIEF PRESSURE = 77 PSIA RESET PRESSURE = 35 PSIA
101,000 BTU/HR GROUND CONTROL 35° F
FLOW RATE ≈
FLOW CNTL VALVE
BYPASS VALVE
MODE CNTL VALVE
ACTUATOR
RAD
BYPASS
MAN SEL
1 (2)
MODE
AUTO
MAN
POWER RESET OUTPUTS 1' FOR 90 SECONDS AFTER INITIATION OF 1', THEN RETURNS OUTPUT TO 0°
OUTPUT 1' FOR 5 SECONDS AFTER INITIATION OF 1', THEN RETURNS OUTPUT TO 0°
UNDERTEMP COMPARATOR 1 (33±0.5°F = 1'
RAD CNTLR COMPARATOR
T > 40°F = 1'
T > 36°F = 1'
T > 59°F = 1'
T < 55°F = 1'
FLOW CONTROL VALVE MOTOR COIL SELECT LOGIC AND DRIVERS
1'=INCREASE HOT FLOW
1'=DECREASE HOT FLOW
VOLTAGE REGULATOR
PULSE GENERATOR
H1=1'
PWR
RAD
BYPASS
ACTUATOR
MAN
AUTO
1=AUTO
1=MAN
1=RAD BYPASS
1=BYPASS
FCL 1 (2) RAD BYP VLV MANUAL
FCL 1 (2) RAD BYP VLV AUTO
FCL 1 (2) RAD BYPASS VLV POSN BYPASS
FCL 1 (2) RAD BYPASS VLV POSN BYPASS
51222E
51222E
51222E
51222E
V63
V63
V63
V63
N/A
N/A
N/A
N/A
OF4
OF4
OF4
OF4
(V63S1420E)
(V63S1421E)
(V63X1422E)
(V63X1423E)
1.2K
1.2K
1.2K
1.2K
CNTLCA3
CNTLBC1
CNTLBA1
CNTLCA1
RPC1
RPB1
RPA1
RPC2
RPB2
RPA2
3A
3A
3A
3A
PNL L1A2
PNL L1A3
S29
S35
S36
(S30)
(S36)
BYPASS
RAD FLOW
RAD
MAN SEL
1 (2)
RAD BYPASS VALVE
LOOP 1 (2) RADIATOR FLOW CONTROLLER B
LOOP 1 (2) RADIATOR FLOW CONTROLLER A
FLOW CONTROL VALVE MOTOR COIL SELECT LOGIC AND DRIVERS
RAD CNTLR COMPARATOR
T > 40°F = 1'
T > 36°F = 1'
T > 59°F = 1'
T < 55°F = 1'
1'=INCREASE HOT FLOW
1'=DECREASE HOT FLOW
VOLTAGE REGULATOR
PULSE GENERATOR
H1=1'
POWER RESET OUTPUTS 1' FOR 90 SECONDS AFTER INITIATION OF 1', THEN RETURNS OUTPUT TO 0°
OUTPUT 1' FOR 5 SECONDS AFTER INITIATION OF 1', THEN RETURNS OUTPUT TO 0°
UNDERTEMP COMPARATOR 1 (33±0.5°F = 1'
PWR
RAD
BYPASS
ACTUATOR
MAN
AUTO
1=AUTO
1=MAN
1=RAD BYPASS
1=BYPASS
FCL 1 (2) RAD BYP VLV MANUAL
FCL 1 (2) RAD BYPASS VLV POSN BYPASS
FCL 1 (2) RAD BYP VLV AUTO
FCL 1 (2) RAD BYPASS VLV POSN BYPASS
51222E
51222E
51222E
51222E
V63
V63
V63
V63
N/A
N/A
N/A
N/A
OF4
OF4
OF4
OF4
(V63S1420E)
(V63S1421E)
(V63X1422E)
(V63X1423E)
1.2K
1.2K
1.2K
1.2K
CNTLCA3
CNTLBC1
CNTLBA1
CNTLCA1
RPC1
RPB1
RPA1
RPC2
RPB2
RPA2
3A
3A
3A
3A
PNL L1A2
PNL L1A3
S29
S35
S36
(S30)
(S36)
BYPASS
RAD FLOW
RAD
MAN SEL
1 (2)
RAD BYPASS VALVE
FLOW CNTL VALVE
BYPASS VALVE
MODE CNTL VALVE
ACTUATOR
65LB FILTERS
FWD & MID FWD PANELS
68-152" ID PATHS/PANEL
DEPLOYABLE
NO 2 MID-FWD PORT (STARBOARD) PANEL
NO 1 FWD PORT (STARBOARD) PANEL
MID AFT & AFT PANELS
26-.22" ID PATHS/PANEL
NO 3 MID-AFT PORT (STARBOARD) PANEL
NO 4 AFT PORT (STARBOARD) PANEL
HYDRAULIC HEAT EXCHANGER
SEE DRAWING NO. 7.2
FLASH EVAP SUBSYSTEM
FCL 1 EVAP OUT TEMP
25 TO 120° F
1 S/S
(OA3)
(V63T1407A)
T120ZA
OA2
OA3
FCL 1 (2) CNTLR OUT TEMP
25 TO 130° F
1 S/S
(OF2)
(V63T1408A)
T120ZA
OF1
OF2
FCL 1 (2) PNL OUT TEMP
-200 TO 450° F
1 S/S
(OA1)
(V63T1410A)
T120ZA
OM1
OF2
FCL 1 (2) MIDBOOT C/P PANEL 4 OUT TEMP
25 TO 130°F
1 S/S
(OA2)
(V63T1405A)
T120ZA
OA3
OA2
FCL 1 (2) MIDBOOT C/P PANEL 5 OUT TEMP
25 TO 130°F
1 S/S
(OF3)
(V63T1404A)
T120ZA
OM3
OF3
FCL 1 (2) RAD IN TEMP
0 TO 160° F
1 S/S
(OA2)
(V63T1403A)
T120ZA
OA1
OA2
FCL 1 (2) COLD PLATE NETWORK FLOW RATE
100 TO 500 LB/HR
1 S/S
(OA3)
(V63R1305A)
R1105A
N/A
OA1
FLOW RATE ORI
RPC
5A
RPB
5A
RPA
5A
CNTLCA1
CNTLBC1
CNTLBA1
1A
1A
1A
FCL 2
FCL 1
0V-102A, 102 FCL 1 RPC 5A
POWERED BY A MNB APCS AND CNTLBC2
PNL L4A1M
PNL L4A2M
PNL L4A3M
PNL L4A4M
PNL L4B1M
PNL L4B2M
PNL L4B3M
PNL L4B4M
PUMP A 4C
PUMP A 3C
PUMP A 2C
PUMP A 1C
PUMP B 4C
PUMP B 3C
PUMP B 2C
PUMP B 1C
PUMP A 4A
PUMP A 3A
PUMP A 2A
PUMP A 1A
PUMP B 4A
PUMP B 3A
PUMP B 2A
PUMP B 1A
(AC4C)
(AC3C)
(AC2C)
(AC1C)
(AC4B)
(AC3B)
(AC2B)
(AC1B)
(AC4A)
(AC3A)
(AC2A)
(AC1A)
(CB41)
(CB40)
(CB39)
(CB38)
(CB27)
(CB26)
(CB25)
(CB24)
V63X1124V
V63X1124N
V63X1124M
V63X1111N
OSE
OPC
DSM 9112 (9114)
(V63X1124V)
(V63X1124N)
(V63X1124M)
PNL L4A2M
PNL L4A3M
PNL L4A4M
PNL L4B1M
PNL L4B2M
PNL L4B3M
PNL L4B4M
PNL L1A2
PNL L1A3
PNL L1A4
PNL L1B2
PNL L1B3
PNL L1B4
PNL 1
PNL 2
PNL 3
PNL 4
PNL 5
RPD 1-21SW
PCA 1-11SW
RPD 2-21SW
PCA 2-11SW
RPD 3-21SW
PCA 3-11SW
PLB FEA-12SW
MCA 1-5SW
MCA 2-10W
CRYO HTR 2-8W
MCA 2-9W
CRYO HTR 4-8W
MCA 3-5SW
CRYO HTR 1-8W
MCA 4-9SW
CRYO HTR 3-8W
MOM 1-76W
FCL 2
FCL 1
FREON LOOP 1 (2)
ACT (AC3)
ACT (AC4)
AC2 (AC1)
PREON LOOP
PRE-FLT BUS 1A (PRE-FLT BUS 2)
FLOW RATE ≈
APU CONT NO. 1
ATC NO. 4
FCN NO. 3
EIU NO. 3
LCA NO. 3
PCA NO. 6
PCA NO. 1
RUC 2
ASA NO. 4
FA-4 MDM
ATC NO. 3
FA-3 MDM
OA-3 MDM
OSC OA3
ASA NO. 3
AF S/C REAR
LEAKAGE PRESS
BAY 6 COLDPLATESM
AFT AVION BAY 6 COLDPLAT
CNTLCA3
1.2K

DATE: 10/21/91 | NAME: JDF | VERSION: INK 9

BASIC REV E-1

LOOP 1 (2) RADIATOR FLOW CONTROLLER A

LOOP 1 (2) RADIATOR FLOW CONTROLLER B

THE SECONDARY GSE COOLANT LOOP HAS NO PLUMBING LINES CONNECTING TO T-0 UMBILICAL

BOTH QD HAVE RELIEF VALVES
RELIEF PRESSURE = 77 PSIA
RESET PRESSURE = 35 PSIA

0.718" ID

65μ FILTERS

GSE HEAT EXCHANGER

FCL 2

NO 1 FWD PORT (STARBOARD) PANEL

FWD & MID FWD PANELS 68-.153" ID PATHS/PANEL DEPLOYABLE

NO 2 MID-FWD PORT (STARBOARD) PANEL

NO 3 MID-AFT PORT (STARBOARD) PANEL

MID AFT & AFT PANELS 26-.232" ID PATHS/PANEL

NO 4 AFT PORT (STARBOARD) PANEL

LOOP 2 CONTROLLER A

LOOP 2 CONTROLLER B

PLUMBING LENGTHS	LOOP 1	LOOP 2
PUMP PACKAGE TO TEE OFF MID C/P BAY 2/3/4	0′, 1"	0′, 1"
TEE OFF MID C/P BAY 2/3/4 TO TEE OFF MID C/P BAY 1/5	4′, 11"	6′, 0"
TEE OFF MID C/P BAY 1/5 TO FC HX	22′, 6"	22′, 2"
FC HX TO TEE IN MID C/P BAY 2/3/4	27′, 2"	18′, 2"
TEE IN MID C/P BAY 2/3/4 TO TEE IN C/P BAY 1/5	0′, 6"	2′, 8"
TEE OFF MID C/P BAY 2/3/4 TO TEE OFF MID C/P BAY 2/3	8′, 5"	9′, 6"
TEE OFF MID C/P BAY 2/3 TO MID C/P 2	4′, 11"	4′, 10"
TEE OFF MID C/P BAY 2/3 TO MID C/P 3	2′, 3"	2′, 8"
MID C/P 2 TO TEE IN MID C/P BAY 2/3	5′, 5"	5′, 5"
MID C/P 3 TO TEE IN MID C/P BAY 2/3	1′, 1"	1′, 0"
TEE IN MID C/P BAY 2/3 TO MID C/P BAY 4	15′, 0"	16′, 2"
MID C/P BAY 4 TO TEE IN MID C/P BAY 2/3/4	14′, 3"	4′, 4"
TEE OFF MID C/P BAY 1/5 TO MID C/P BAY 1	2′, 4"	1′, 11"
MID C/P BAY 1 TO MID C/P BAY 5	17′, 4"	18′, 1"
MID C/P BAY 5 TO TEE IN MID C/P BAY 1/5	4′, 3"	15′, 6"
TEE IN MID C/P BAY 1/5 TO HYDR HX	74′, 11"	91′, 0"
HYDR HX TO TEE OFF RADS	40′, 9"	49′, 6"
TEE OFF RADS TO RAD CNTLR (BYPASS/HOT LEG)	1′, 2"	0′, 7"
TEE OFF RADS TO AFT PNL CONNECTION	11′, 8"	12′, 10"
FRWD PNL CONNECTION TO RAD CNTLR (COLD LEG)	53′, 11"	51′, 3"
RAD CNTLR TO GSE	34′, 10"	50′, 9"
GSE HX TO ABS	19′, 10"	18′, 1"
ABS TO FES	34′, 7"	33′, 9"
FES TO TEE OFF AFT C/P	3′, 4"	5′, 8"
TEE OFF AFT C/P TO FPV	74′, 6"	90′, 3"
FPV TO INTCHGR	14′, 0"	12′, 2"
INTCHGR TO TEE IN INTCHGR/PL	5′, 9"	4′, 2"
FPV TO PL HX	3′, 6"	4′, 0"
PL HX TO TEE IN INTCHGR/PL	8′, 1"	7′, 2"
TEE IN INTCHGR/PL TO TEE IN CP/INTCHGR/PL	1′, 8"	1′, 11"
TEE OFF AFT C/P TO AFT C/P BAY 6	7′, 8"	6′, 2"
AFT C/P BAY 6 TO AFT C/P BAY 5	15′, 5"	15′, 8"
AFT C/P BAY 5 TO AFT C/P BAY 4	8′, 2"	8′, 3"
AFT C/P BAY 4 TO TEE IN CP/INTCHGR/PL	88′, 10"	105′, 5"
TEE IN CP/INTCHGR/PL TO PUMP PACKAGE	0′, 4"	0′, 3"

DATE: 9/05/90	NAME: LAM	VERSION: INK, 3
DATE: 09/03/91	NAME: VSH	VERSION: BPT, 1
DATE: 09/17/91	NAME: MAG	VERSION: INK, 4

* 1 ATCS 2

SIGNATURE		DATE
DSGN	VIC ORTIZ	5/11/87
DR		
ENGR	M. LANGLEY	
ENGR	Mary M. Langley	10/7/91
APP	Mack F. Tevis	10/7/91
APP		
OMNIPLAN	S. K. Kimbrell	10.21.91
LTR E	PCN 1	

NATIONAL AERONAUTICS AND SPACE ADMINISTRATION
LYNDON B. JOHNSON SPACE CENTER HOUSTON, TEXAS

ACTIVE THERMAL CONTROL SYSTEM-
FREON COOLANT LOOP 1, 2
(PLUMBING LENGTHS)

SPACE SHUTTLE	DWG NO
ALL	7.1
22 x 17	PAGE / SHEET 2 OF 2

BASIC REV E DCN-1

DATE: 09/03/91	NAME: VSH	VERSION: BPT: 1
DATE: 09/18/91	NAME: MAG	VERSION: INK: 1
DATE: 11/26/91	NAME: PSD	VERSION: INK: 2

.218" ID

.968" ID

EXIT LOCATION:
X=1407
Y=16.5
Z=5.11
DIA: .8"

V63 T1181A | OA2 | OA2
NH_3 EVAP DISCH TEMP AFT FUSL
-75 TO +175°F
1 S/S

NH_3 BOILER
113,200 BTU/HR MAX
PRI/GPC CONTROL PT = 35 ±3
SEC/ON CONTROL PT = 34 ±3

FCL 1 FROM GSE HX

0.718" ID

FCL 1

TO FES

FCL 2

FCL 2

GSE FITTINGS
X_0 = 1380.0
Z_0 = 402.5

V63 P1197A | OA3 | OA3
NH_3 SYS B TANK PRESS
0 TO 600 PSIA
1 S/S

CRACK PRESS = 520 PSIG
RESET PRESS = 450 PSIG
FULL FLOW PRESS = 550 PSIG

NH_3 SYS B

48.8 LBS MAX USABLE

ISOL VLV NC

SEC CNTL VLV NO

PRI CNTL VLV NO

.218" ID

V63 P1196A | OA1 | OA1
NH_3 SYS A TANK PRESS
0 TO 600 PSIA
1 S/S

V63 T1188A | OA1 | OA1
NH_3 SYS B TANK TEMP
-75 TO 175° F
1 S/S

OPEN

OPEN

M

M

NH_3 SYS A

48.8 LBS MAX USABLE

CRACK PRESS = 520 PSIG
RESET PRESS = 450 PSIG
FULL FLOW PRESS = 550 PSIG

V63 T1180A | OA2 | OA2
NH_3 SYS A TANK TEMP
-75 TO 175° F
1 S/S

ISOL VLV NC

SEC CNTL VLV NO

PRI CNTL VLV NO

.218" ID

OPEN

OPEN

M

M

NH_3 LEAKAGE FLOW RATES[A]

VEHICLE	NH_3 PRESSURE DIFFERENTIAL, PSI	300	250	200
102	SYSTEM A FLOW, LB/HR	19.2	17.5	15.7
	SYSTEM B FLOW, LB/HR	10.5	9.6	8.6
103	SYSTEM A FLOW, LB/HR	28.1	25.7	22.9
	SYSTEM B FLOW, LB/HR	16.9	15.4	13.8
104	SYSTEM A FLOW, LB/HR	16.2	14.8	13.2
	SYSTEM B FLOW, LB/HR	31.2	28.5	25.5

NOTE: [A] LEAKAGE FLOW RATES THROUGH AMMONIA BOILER SYSTEM PRIMARY FLOW CONTROL VALVES AT 300 MILLIAMPERES VALVE CURRENT (CLOSED POSITION) AND NH_3 TANK TEMPERATURE OF 55°F

$V_{CNTLBC3}$ 1.2K

$V_{CNTLCA2}$ 1.2K

$V_{CNTLAB1}$ 1.2K

NH_3 BOILER

A

PRI/GPC

OFF

SEC/ON

PNL L1A2 S42

V63 S1178E | OF4 | N/A
NH_3 CONTROLLER A PRI/GPC
1=PRI/GPC ON
1 S/S

V63 S1186E | OF4 | N/A
NH_3 CONTROLLER A SEC/ON
1=SEC ON
1 S/S

V_{MNA} ALC1 10A

V_{MNC} ALC3 10A

10A

10A

10A

[3]

PL 1 V63K1555Y DSM 9108

PL 2 V63K1551Y DSM 9106

GPC 2

V98 X0729X | N/A | N/A
ABS ON COMMAND
1=ON
1 S/S

PL 2 V63K1559Y DSM 9110

V_{MNC} ALC3 10A

10A

V_{MNB} ALC2 10A

10A

NH_3 GROUND COMMANDING			
MSID NO.	NOMENCLATURE	PL MDM	DSM
V63K1551Y	NH_3 PRI A/B ON GPC A	PF2	9106
V63K1555Y	NH_3 PRI A/B ON GPC B	PF1	9108
V63K1559Y	NH_3 PRI A/B ON GPC C	PF2	9110

2 OF 3 DSM'S ARE NEEDED TO COMMAND NH_3 SYSTEM ON

NH_3 SYS A: DSM 9106 AND 9108; DSM 9110 AND 9108

NH_3 SYS B: DSM 9106 AND 9110; DSM 9106 AND 9108

NH_3 GPC COMMAND SENT
- MM602 THRU 603
- MM304 AT 120K FEET AND ANTENNA SELECTION FLAG
- OPS 0 AND 9 TRANSITIONS WITH COMMAND PREVIOUSLY PRESENT

NH3 SYS B CONTROLLER

NH3 SYS A CONTROLLER

PRIMARY CONTROLLER

VOLTAGE REGULATOR

BRIDGE

RESPONSE CONTROL

1

SECONDARY CONTROLLER

VOLTAGE REGULATOR

BRIDGE

RESPONSE CONTROL

FAULT DETECTION LOGIC

UNDERTEMP COMPARATOR
IF T<31.25°F FOR 10 SEC, THEN OUTPUT 1 (IF T>31.75°F FOR .01 SEC, THEN TIMER RESETS)

INITIALIZATION TIME DELAY 0.01 SEC

V63 X1193E | OA2 | N/A
NH_3 SYS B SEC FLOW CNTLR ACTIVATE
1=ACTIVATE
1 S/S

V63 X1198E | OA1 | N/A
NH_3 SYS A SEC FLOW CNTLR ACTIVATE
1=ACTIVATE
1 S/S

$V_{CNTLBC2}$ 1.2K

$V_{CNTLAB2}$ 1.2K

$V_{CNTLCA1}$ 1.2K

NH_3 BOILER

B

PRI/GPC

OFF

SEC/ON

PNL L1A2 S43

V63 S1182E | OF4 | N/A
NH_3 CONTROLLER B PRI/GPC
1=PRI/GPC ON
1 S/S

V63 S1190E | OF4 | N/A
NH_3 CONTROLLER B SEC/ON
1=SEC ON
1 S/S

[3]

PAYLOAD MDM LOSS	
MDM LOST	NH_3 SYSTEM LOST
PL1	NH_3 SYSTEM A PRI/GPC
PL2	NH_3 SYSTEM A PRI/GPC NH_3 SYSTEM B PRI/GPC

[2] IF THE AMMONIA BOILER OUT TEMP DROPS BELOW 31.25° F, A 10 SECOND TIMER IS BEGUN. AT THE END OF 10 SECONDS EITHER THE TIMER WILL BE RESET OR SWITCHOVER FROM PRIMARY TO SECONDARY CONTROLLER WILL OCCUR DEPENDING ON THE FOLLOWING:

- IF THE TEMP REMAINS BELOW 31.25° F CONTINUOUSLY FOR 10 SEC, SWITCHOVER WILL OCCUR AND THE SECONDARY CONTROLLER AND VALVE WILL BE SELECTED WITH THE PRIMARY VALVE THEN GOING FULL OPEN
- IF DURING THE 10 SEC THE TEMP RISES ABOVE 31.75° F FOR AS LONG AS 10 MILLISECONDS, THE TIMER IS RESET AND OPERATION CONTINUES ON THE PRIMARY CONTROLLER AND VALVE
- IF DURING THE 10 SEC THE TEMP RISES ABOVE 31.25° F BUT NOT ABOVE 31.75° F, THEN EITHER RESET OR SWITCHOVER MAY OCCUR AT THE OPTION OF THE CONTROLLER

– AUTO SWITCHOVER CAN ONLY OCCUR FROM PRIMARY TO SECONDARY

– TO SWITCH FROM SECONDARY TO PRIMARY (TO RESET THE MALFUNCTION LOGIC) POWER MUST BE REMOVED FROM UNIT AND REAPPLIED

NOTES: [1] UPON INITIAL APPLICATION OF POWER, CONTROLLER DRIVES PRIMARY CONTROL VALVE TO MOST CLOSED POSITION (VALVE IS OPEN WHEN UNPOWERED). CONTROLLER THEN ADJUSTS VALVE TO ESTABLISH AND MAINTAIN THE AMMONIA BOILER FREON OUTLET TEMPERATURE AT 35.34± 3.7°F, AS BOILER OUT TEMP INCREASES, CURRENT TO VALVE DECREASES ALLOWING VALVE TO OPEN MORE. AT ZERO CURRENT VALVE IS FULL OPEN. AT 300 TO 315 MILLIAMPS VALVE IS AT MAX CLOSED POSITION (FOR OV102 5-10 PERCENT OF TOTAL FLOW AREA IS STILL OPEN FOR FLOW AT MAX CLOSED POSITION). SPEC MAX FLOW IN CLOSE POSITION IS 45 LBS/HR

*2 ABS 1

SIGNATURE		DATE	NATIONAL AERONAUTICS AND SPACE ADMINISTRATION LYNDON B. JOHNSON SPACE CENTER HOUSTON, TEXAS
DSGN	LINDA DUMIS	10/31/78	
DR	VIC. ORTIZ	04/04/79	AMMONIA BOILER SYSTEM
ENGR	M. LANGLEY		
ENGR	Margaret E. Langley	10/7/91	
APP	Mark J. Ferrell	10/22/91	
APP			SPACE SHUTTLE / DWG NO 7.2
OMNIPLAN	S.K. Andrews	10-21-91	ALL
LTR E	PCN 1		126.5 X 34 / PAGE - / SHEET 1 OF 1

BASIC REV E-1

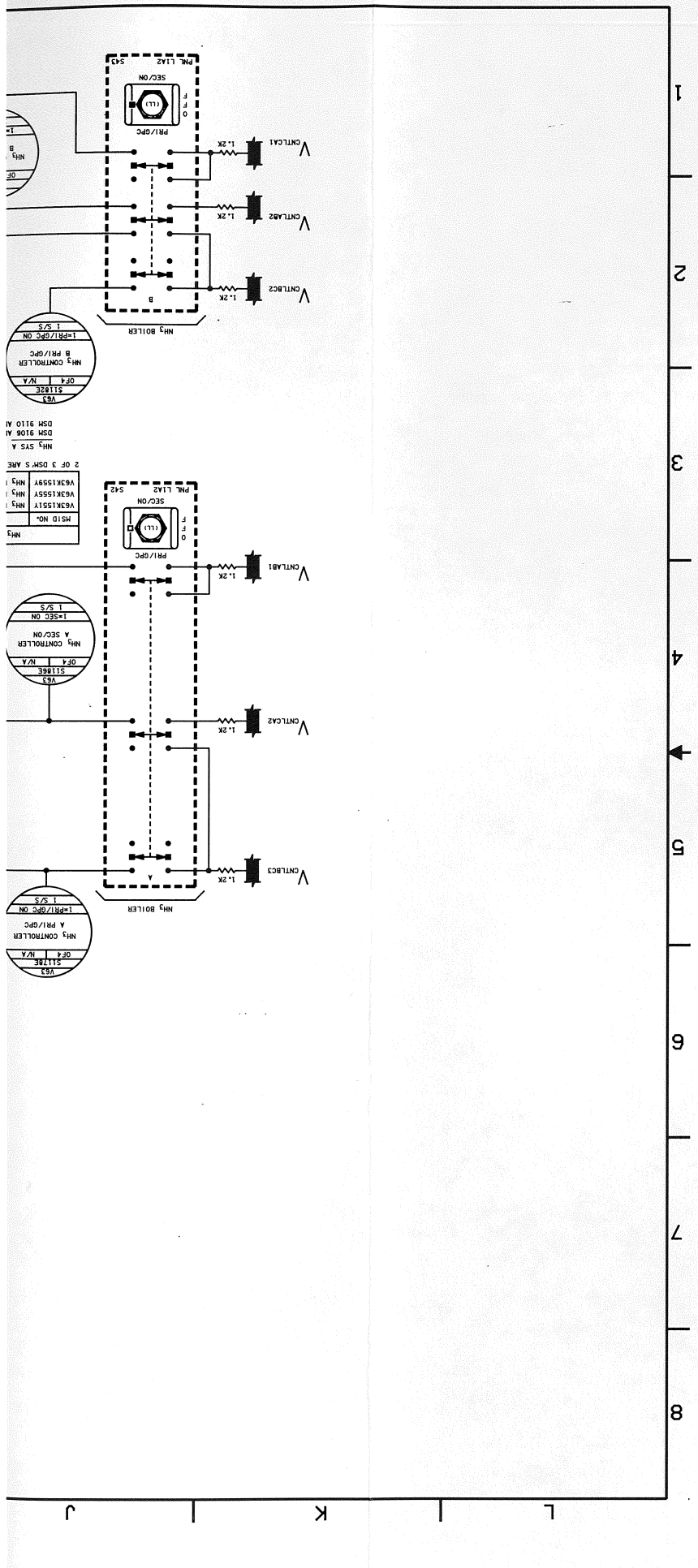
PAL L1A2 S43
SEC/ON
PRI/OPC
OFF
ON
CNTLCA1
CNTLAB2
CNTLBC2
1.2K
NH3 BOILER
B
1=PRI/OPC ON
1 S/S
NH3 CONTROLLER
B PRI/OPC
V63
S11E4E
OF4
N/A
PAL L1A2 S42
CNTLAB1
CNTLCA2
1=SEC ON
A SEC/ON
MS10 No.
V63K15S1Y
V63K15S5Y
V63K15S9Y
2 OF 3 DSM'S ARE
DSM 9110 AI
DSM 9106 AI
NH3 SYS A
PAL L1A2 S41
CNTLBC3
A
1=PRI/OPC ON
A PRI/OPC
NH3 CONTROLLER
S11E3E
1 2 3 4 5 6 7 8
J K L

DATE: 10/10/91	NAME: JDF	VERSION#: BPT: 24
DATE: 10-19-91	NAME: SKK	VERSION#: INK: 5
DATE: 11/04/91	NAME: BJT	VERSION#: INK: 6

J I H G F E D C B A

8 7 6 5 4 3 2 1

NOZZLE EXIT: X_O = 1390.3, Y_O = -113.6, Z_O = 326.8, DIA= 4.5"

OVBD

ITLR
S TO
330° F

ZONE C HEATERS (NOZ)

ZONE B HEATERS (OUTBOARD)

HTR A
B
C

AD DUCT
HTR A
fiW
B
C

BOTH THERMOSTATS: CLOSE 255 ±5° F, OPEN 265 ±5° F, MIN ΔT = 4° F

V63 T1890A — OA3 | OA3 — HI LOAD DUCT NOZ T — 0 TO 400° F — 1 S/S — F

V63 T1821A — OF4 | OH2 — HI LOAD DUCT T Y-91 (OUTBD) — 0 TO 400° F — 1 S/S — F

$V_{CNTLAB2}$ 1A

$V_{CNTLAB3}$ 1A

$V_{CNTLAB1}$ 1A

$V_{CNTLBC1}$ 1A

$V_{CNTLBC3}$ 1A

$V_{CNTLBC2}$ 1A

$V_{CNTLCA1}$ 1A

$V_{CNTLCA2}$ 1A

$V_{CNTLCA3}$ 1A

TOPPING EVAPORATOR HEATER — DUCT

V63 S2631E — OF4 | N/A — TOPPING DUCT HTR C ON — 1=C ON — 1 S/S

V63 S2621E — OF4 | N/A — TOPPING DUCT HTR B ON — 1=B ON — 1 S/S

V63 S2641E — OF4 | N/A — TOPPING DUCT HTR A/B ON — 1=A/B ON — 1 S/S

V63 S2601E — OF4 | N/A — TOPPING DUCT HTR A ON — 1=A ON — 1 S/S

A/B: C, B, A, OFF

PNL L1A2 S39

V_{MNA} MPC1 — RPC 15A — TOPPING DUCT FWD HTR A 257W AT 24VDC

V_{MNA} MPC1 — RPC 20A — TOPPING DUCT AFT HTR A 321W AT 24VDC

BOTH THERMOSTATS: CLOSE 255 ± 5° F, OPEN 265 ± 5° F, MIN ΔT = 4° F

V_{MNA} ALC1 — III — OVERTEMP THERMOSTAT OPEN 285-295° F — TOPPING DUCT RIGHT HTR A 42.7W AT 24VDC

CLOSE 154 ± 3° F, OPEN 162 ± 4° F, MIN ΔT = 2° F

V_{MNA} ALC1 — III — OVERTEMP THERMOSTAT OPEN 285-295° F — TOPPING DUCT LEFT HTR A 42.7W AT 24VDC

CLOSE 154 ± 3° F, OPEN 162 ± 4° F, MIN ΔT = 2° F

V_{MNB} MPC2 — RPC 15A — TOPPING DUCT FWD HTR B 257W AT 24VDC

V_{MNB} MPC2 — RPC 20A — TOPPING DUCT AFT HTR B 321W AT 24VDC

BOTH THERMOSTATS: CLOSE 255 ± 5° F, OPEN 265 ± 5° F, MIN ΔT = 4° F

V_{MNB} ALC2 — III — OVERTEMP THERMOSTAT OPEN 285-295° F — TOPPING DUCT RIGHT HTR B 42.7W AT 24VDC

CLOSE 154 ± 3° F, OPEN 162 ± 4° F, MIN ΔT = 2° F

V_{MNB} ALC2 — III — OVERTEMP THERMOSTAT OPEN 285-295° F — TOPPING DUCT LEFT HTR B 42.7W AT 24VDC

CLOSE 154 ± 3° F, OPEN 162 ± 4° F, MIN ΔT = 2° F

V_{MNC} MPC3 — RPC 15A — TOPPING DUCT FWD HTR C 257W AT 24VDC

V_{MNC} MPC3 — RPC 20A — TOPPING DUCT AFT HTR C 321W AT 24VDC

BOTH THERMOSTATS: CLOSE 255 ± 5° F, OPEN 265 ± 5° F, MIN ΔT = 4° F

TOPPING EVAPORATOR HEATER — L-NOZZLE

$V_{CNTLBC1}$ 1.2K

$V_{CNTLAB2}$ 1.2K

A AUTO / OFF / B AUTO

PNL L1A2 S37

V63 S1880E — OA1 | N/A — L TOP NOZ HTR A ON — 1=ON — 1 S/S

V63 S1881E — OA2 | N/A — L TOP NOZ HTR B ON — 1=ON — 1 S/S

V_{MNA} ALC1 — III — TEMP CNTLR / BRIDGE — LEFT TOPPING DUCT NOZ HTR A 18.4W AT 24VDC — TEMP CNTLR CONTROLS TO 55 ± 15° F

V_{MNB} ALC2 — III — TEMP CNTLR / BRIDGE — LEFT TOPPING DUCT NOZ HTR B 18.4W AT 24VDC — TEMP CNTLR CONTROLS TO 55 ± 15° F

FCL 1 TO TOPPING

FCL 2

TOPPING EVAPORATOR HEATER — R-NOZZLE

$V_{CNTLBC3}$ 1.2K

$V_{CNTLCA1}$ 1.2K

A AUTO / OFF / B AUTO

PNL L1A2 S38

V63 S1885E — OA2 | N/A — R TOP NOZ HTR A ON — 1=ON — 1 S/S

V63 S1886E — OA3 | N/A — R TOP NOZ HTR B ON — 1=ON — 1 S/S

V_{MNB} ALC2 — III — TEMP CNTLR / BRIDGE — RIGHT TOPPING DUCT NOZ HTR A 18.4W AT 24VDC — TEMP CNTLR CONTROLS TO 55 ± 15° F

V_{MNC} ALC3 — III — TEMP CNTLR / BRIDGE — RIGHT TOPPING DUCT NOZ HTR B 18.4W AT 24VDC — TEMP CNTLR CONTROLS TO 55 ± 15° F

NOZZLE EXIT: X_O = 1505.7, Y_O = -127.1, Z_O = 304.8, DIA= 2.09"

OVBD

ZONE I HEATERS (HEATERS A, B)

CONTROLS TO 55 ± 15° F

V63 T1878A — OA3 | OA3 — L TOP NOZZLE T (L NOZ) — 0 TO 250° F — 1 S/S — F

TOPPING DUCT LEFT NOZZLE HTR A — B

CONTROL THERMOSTATS: CLOSE 154 ± 3° F, OPEN 162 ± 4° F, MIN ΔT = 2° F

OVERTEMP THERMOSTATS: CLOSE 285° F, OPEN 295° F

ZONE H HEATERS (HEATERS A, B)

TOPPING DUCT LEFT HTR A — B

V63 T1800A — OA3 | OA3 — L TOP DUCT T Y-89 (L) — 0 TO 250° F — 1 S/S — F

TOPPING DUCT AFT HTR — C, B, A

BOTH THERMOSTATS: CLOSE 255 ± 5° F, OPEN 265 ± 5° F, MIN ΔT = 4° F

TOPPING DUCT FWD HTR A — B, C

V63 T1801A — OF4 | OH2 — TOP DUCT T X1390 (FWD) — 0 TO 400° F — 1 S/S — F

ZONE D HEATERS (HEATERS A, B, C)

V63 T1802A — OF4 | OH2 — TOP DUCT T X1464 (AFT) — 0 TO 400° F — 1 S/S — F

ZONE E HEATERS (HEATERS A, B, C)

V63 T1810A — OA2 | OA2 — R TOP DUCT T Y-89 (R) — 0 TO 250° F — 1 S/S — F

CONTROL THERMOSTATS: CLOSE 154 ± 3° F, OPEN 162 ± 4° F, MIN ΔT = 2° F

OVERTEMP THERMOSTATS: CLOSE 285° F, OPEN 295° F

ZONE F HEATERS (HEATERS A, B)

TOPPING DUCT RIGHT HTR A — B

CONTROLS TO 55 ± 15° F

ZONE G HEATERS (HEATERS A, B)

V63 T1879A — OA2 | OA2 — R TOP NOZZLE T (R NOZ) — 0 TO 250° F — 1 S/S — F

OVBD

TOPPING DUCT RIGHT NOZZLE HTR A — B

NOZZLE EXIT: X_O = 1505.7, Y_O = -127.1, Z_O = 304.8, DIA= 2.09"

~50% OF TOTAL FLOW

~50% OF TOTAL FLOW

~12% OF TOTAL FLOW

~12% OF TOTAL FLOW

SPRAY NOZ B

SPRAY NOZ A

ACOD

FCL 2

FCL 1

TOPPING EVAPORATOR

12. REFER TO TABLE 7-1 DRAWING REFERENCES

11. TYPE I

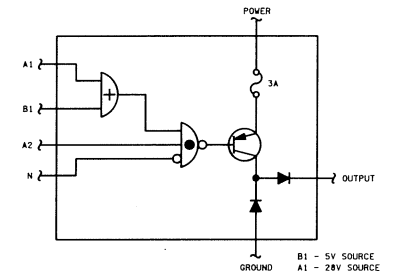

B1 - 5V SOURCE
A1 - 28V SOURCE

TYPE III

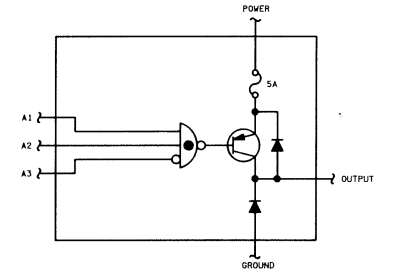

10. FES HI LOAD FDLN HTR AND ACCUM FDLN HTR OPERATE ON SAME THERMOSTAT

9. OK SIGNAL LOST WHEN N_2 CHARGE LOST (BELLOWS AT 100%). MECHANICAL CONTACT SWITCH

8. TOPPING DUCT "C" HTR POSITION POWERS THE DUCT "B" LEFT AND RIGHT HTRS

7. THERMOSTAT SET POINTS: CLOSE TO 5°F, OPEN 80 ± 5°F, EXCEPT ACCUMULATOR THERMOSTAT (55 TO 75°F)

6. FEEDWATER LINES ARE 3/8" AND ~100 FT LONG. THEY ARE CONSTRUCTED OF SS, INSULATED WITH 0.5" TG15000 AND COVERED WITH SS FOIL

5. 90 INCH LONG DUCT WITH 6" DIA

4. 82 INCH LONG DUCT WITH 6" DIA WHICH BRANCHES INTO TWO 170 INCH LONG DUCTS WITH 4" DIA

3. USEABLE H_2O VOLUME 10 IN^3. INSULATED WITH 0.5" TG15000

2. ALL DUCTS ARE ALUMINUM, INSULATED WITH 1 INCH TG15000 AND COVERED WITH ALUMINIZED TAPE. NOZZLE ASSEMBLIES: HI LOAD CONSTRUCTED OF NICKEL, TOPPING CONSTRUCTED OF COLUMBIUM

NOTES: 1. WATER SUPPLY IS 15-17.5 PSI ABOVE CABIN PRESSURE AT 60-110° F

*3 FES 1

SIGNATURE		DATE	NATIONAL AERONAUTICS AND SPACE ADMINISTRATION, LYNDON B. JOHNSON SPACE CENTER HOUSTON, TEXAS	
DSGN LINDA DUMIS		3/3/80		
DR			FLASH EVAPORATOR SUBSYSTEM	
ENGR K. MESSERSMITH				
ENGR R. M.		10/29/91		
APP Schaffer, for		11/19/91		
APP			SPACE SHUTTLE	DWG NO 7.3
OMNIPLAN S.K. Emhe		11-19	ALL	
LTR E	PCN 1		124.5 X 34	PAGE SHEET 1 OF 2

BASIC REV E-1

T S R Q P O N M L K J

FES FDLN A FWD HTR 1 18.8W AT 26.5VDC
FES FDLN A MID 1 HTR 1
FES ACCUM A HTR 1 14.6W AT 26.5VDC
FES TOPPING FDLN A HTR 1 14.6W AT 26.5VDC
FES FDLN A MID 2 HTR 1 46W AT 26.5VDC
FES FDLN A FWD HTR 2 18.8W AT 26.5VDC
FES FDLN A MID 1 HTR 2
FES ACCUM A HTR 2 14.6W AT 26.5VDC
FES TOPPING FDLN A HTR 2 14.6W AT 26.5VDC
FES FDLN A MID 2 HTR 2 46W AT 26.5VDC

V_{MNC} ALC3 — FES FDLN B FWD HTR 1 18.8W AT 26.5VDC
FES FDLN B AFT HTR 1 21.0W AT 26.5VDC
FES FDLN B MID 1 HTR 1 18.8W AT 26.5VDC
FES HI LOAD FDLN B HTR 1 7.5W AT 26.5VDC
FES ACCUM B HTR 1 14.6W AT 26.5VDC
FES ACCUM FDLN B HTR 1 3.3W AT 26.5VDC
FES TOPPING FDLN B HTR 1 14.6W AT 26.5VDC
V_{MNC} MPC3 5A — FES FDLN B MID 2 HTR 1 46W AT 26.5VDC

FLASH EVAP FEEDLINE HTR
$V_{CNTLAB1}$ 1A 2K
$V_{CNTLCA1}$ 1A 2K
B SUPPLY
PNL L2A1 S24

V63 S1865E 0F4 N/A — FES FDLN B HTR 1 ON — 1=ON 1 S/S

V_{MNA} ALC1 — FES FDLN B FWD HTR 2 18.8W AT 26.5VDC
FES FDLN B AFT HTR 2 21.0W AT 26.5VDC
FES FDLN B MID 1 HTR 2 18.8W AT 26.5VDC
FES HI LOAD FDLN B HTR 2 7.5W AT 26.5VDC
FES ACCUM B HTR 2 14.6W AT 26.5VDC
FES ACCUM FDLN B HTR 2 3.3W AT 26.5VDC
FES TOPPING FDLN B HTR 2 14.6W AT 26.5VDC
V_{MNA} MPC1 5A — FES FDLN B MID 2 HTR 2 46W AT 26.5VDC

V63 S1866E 0F4 N/A — FES FDLN B HTR 2 ON — 1=ON 1 S/S

V63 T1896A 0A2 0A2 — FES FDLN B HI LOAD LINE T — 0 TO 250° F 1 S/S F
V63 T1895A 0A1 0M1 — FES FDLN A HI LOAD LINE T — 0 TO 250° F 1 S/S F

X1307 — FES FDLN B AFT HTRS 1 AND 2 — X1380
.43" I.D.
ISOL VLV B — PULSER VLV B — 40µ FILTER — P, O/Z 7, 3-2 — ISOL VLV A — PULSER VLV A — HI LOAD EVAPORATOR

V63 T1877A 0F3 0M2 — FES FDLN B TEMP X1360 (AFT) — 0 TO 160° F 1 S/S F
V63 T1894A 0A2 0M2 — FES FDLN B ACCUM LINE T — 0 TO 160° F 1 S/S
V63 T1760A 0A3 0A3 — FES FDLN B ACCUM T — 25 TO 130° F 1 S/S
V63 X1761E 0A3 N/A — FES FDLN B ACCUM P OK — 1=ON/OK 1 S/S
FES ACCUM FDLN B HTRS 1 AND 2
FES HI LOAD FDLN B HTRS 1 AND 2
FES ACCUM A HTRS 1 AND 2
V63 X1751E 0A1 N/A — FES FDLN A ACCUM P OK — 1=ON/OK 1 S/S
V63 T1750A 0A2 0A2 — FES FDLN A ACCUM T — 25 TO 130° F 1 S/S
FES TOPPING FDLN B HTRS 1 AND 2
V63 T1876A 0F1 0M1 — FES FDLN A TEMP X1360 (AFT) — 0 TO 160° F 1 S/S F
FES HI LOAD FDLN A HTRS 1 AND 2
FES ACCUM FDLN A HTRS 1 AND 2
V63 T1892A 0A2 0M2 — FES FDLN A ACCUM LINE T — 0 TO 160° F 1 S/S
40µ FILTER
ISOL VLV B — PULSER VLV B — 40µ FILTER — P, O/Z 7, 3-2 — ISOL VLV A — PULSER VLV A — TOPPING EVAPORATOR
.43" I.D.
X1307 — FES FDLN A AFT HTRS 1 AND 2 — X1380
FES TOPPING FDLN A HTRS 1 AND 2
X1390
V63 T1893A 0A2 0M2 — FES TOPPING FDLN B T — 0 TO 160° F 1 S/S F
V63 T1891A 0A2 0M2 — FES TOPPING FDLN A T — 0 TO 160° F 1 S/S F
MID FUSELAGE | AFT FUSELAGE

HI LOAD DUCT HTR
$V_{CNTLAB1}$ 1A — V63 S2531E 0F4 N/A — HI LOAD DUCT HTR C ON — 1=C ON 1 S/S
$V_{CNTLAB3}$ 1A — V63 S2521E 0F4 N/A — HI LOAD DUCT HTR B ON — 1=B ON 1 S/S
$V_{CNTLAB2}$ 1A
$V_{CNTLBC1}$ 1A — V63 S2501E 0F4 N/A — HI LOAD DUCT HTR A ON — 1=A ON 1 S/S
$V_{CNTLBC2}$ 1A
$V_{CNTLBC3}$ 1A
$V_{CNTLCA2}$ 1A
$V_{CNTLCA3}$ 1A — V63 S2511E 0F4 N/A — HI LOAD DUCT HTR A/B ON — 1=A/B ON 1 S/S
$V_{CNTLCA1}$ 1A
A/B C B A OFF — PNL L1A2 S41

V_{MNA} ALC1 — TEMP CNTLR — BRIDGE — HI LOAD DUCT NOZ HTR A 85W AT 24VDC — TEMP CNTLR CONTROLS TO 300 TO 330° F
V_{MNA} MPC1 — RPC 15A — BOTH THERMOSTATS* CLOSE 255 ± 5° F OPEN 265 ± 5° F MIN ΔT = 4° F — HI LOAD DUCT OUTBD HTR A 171W AT 24VDC
V_{MNA} MPC1 — RPC 15A — BOTH THERMOSTATS* CLOSE 255 ± 5° F OPEN 265 ± 5° F MIN ΔT = 4° F — HI LOAD DUCT INBD HTR A 368W AT 24VDC

V_{MNB} ALC2 — TEMP CNTLR — BRIDGE — HI LOAD DUCT NOZ HTR B 85W AT 24VDC — TEMP CNTLR CONTROLS TO 300 TO 330° F
V_{MNB} MPC2 — RPC 15A — BOTH THERMOSTATS* CLOSE 255 ± 5° F OPEN 265 ± 5° F MIN ΔT = 4° F — HI LOAD DUCT OUTBD HTR B 171W AT 24VDC
V_{MNB} MPC2 — RPC 20A — BOTH THERMOSTATS* CLOSE 255 ± 5° F OPEN 265 ± 5° F MIN ΔT = 4° F — HI LOAD DUCT INBD HTR B 368W AT 24VDC

V_{MNC} ALC3 — TEMP CNTLR — BRIDGE — HI LOAD DUCT NOZ HTR C 85W AT 24VDC — TEMP CNTLR CONTROLS TO 300 TO 330° F
V_{MNC} MPC3 — RPC 15A — BOTH THERMOSTATS* CLOSE 255 ± 5° F OPEN 265 ± 5° F MIN ΔT = 4° F — HI LOAD DUCT OUTBD HTR C 171W AT 24VDC
V_{MNC} MPC3 — RPC 20A — BOTH THERMOSTATS* CLOSE 255 ± 5° F OPEN 265 ± 5° F MIN ΔT = 4° F — HI LOAD DUCT INBD HTR C 368W AT 24VDC

NOZZLE EXIT* X_Q = 1390.3, Y_Q = -113.6, Z_Q = 326.8, DIA* 4.5°
OVBD
V63 T1890A 0A3 0A3 — HI LOAD DUCT NOZ T — 0 TO 400° F 1 S/S F
$V_{CNTLAB2}$ 1A
TEMP CNTLR CONTROLS TO 300 TO 330° F
ZONE C HEATERS (NOZ)
HI LOAD NOZ HTR A — B — C
$V_{CNTLAB3}$ 1A
$V_{CNTLAB1}$ 1A
ZONE B HEATERS (OUTBOARD)
HI LOAD DUCT OUTBD HTR A 171W — B — C
$V_{CNTLBC1}$ 1A
$V_{CNTLBC3}$ 1A
BOTH THERMOSTATS* CLOSE 255 ±5° F OPEN 265 ±5° F MIN ΔT = 4° F
$V_{CNTLBC2}$ 1A
HI LOAD DUCT INBD HTR A 368W — B — C
ZONE A HEATERS (INBOARD)
V63 T1820A 0A1 0A1 — HI LOAD DUCT T Y-89 (INBD) — 0 TO 400° F 1 S/S F
V63 T1821A 0F4 0M2 — HI LOAD DUCT T Y-91 (OUTBD) — 0 TO 400° F 1 S/S F
$V_{CNTLCA1}$ 1A
$V_{CNTLCA2}$ 1A
$V_{CNTLCA3}$ 1A
$V_{CNTLBC1}$ 1A
$V_{CNTLAB2}$ 1A

FCL 1 — ~50% OF TOTAL FLOW
FCL 2 — ~50% OF TOTAL FLOW
ACOD
FCL 1 TO TOPPING
FCL 2
SPRAY NOZ B — SPRAY NOZ A
~12% OF TOTAL FLOW
~12% OF TOTAL FLOW
HI LOAD EVAPORATOR

DATE: 11/04/91 | NAME: BJT | VERSION: INK 6

W V U T S R Q P O N

8 7 6 5 4 3 2 1

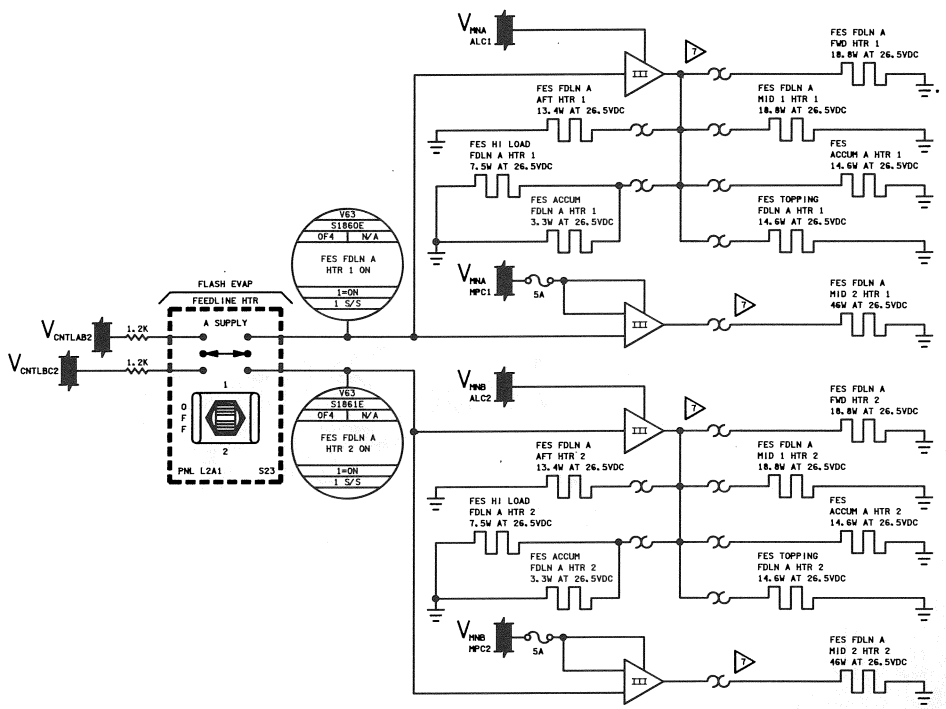

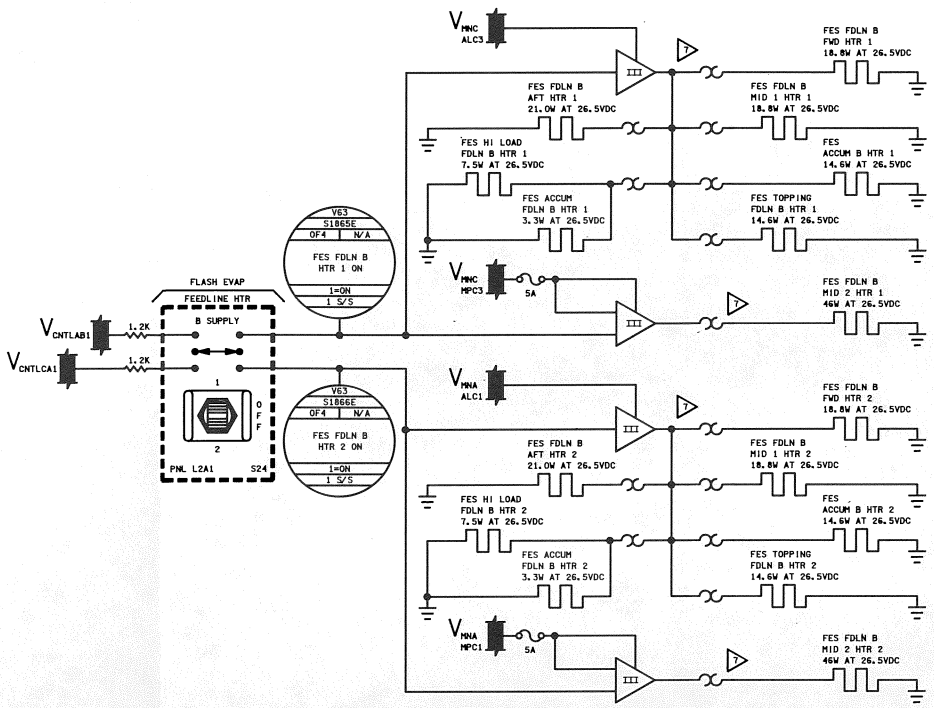

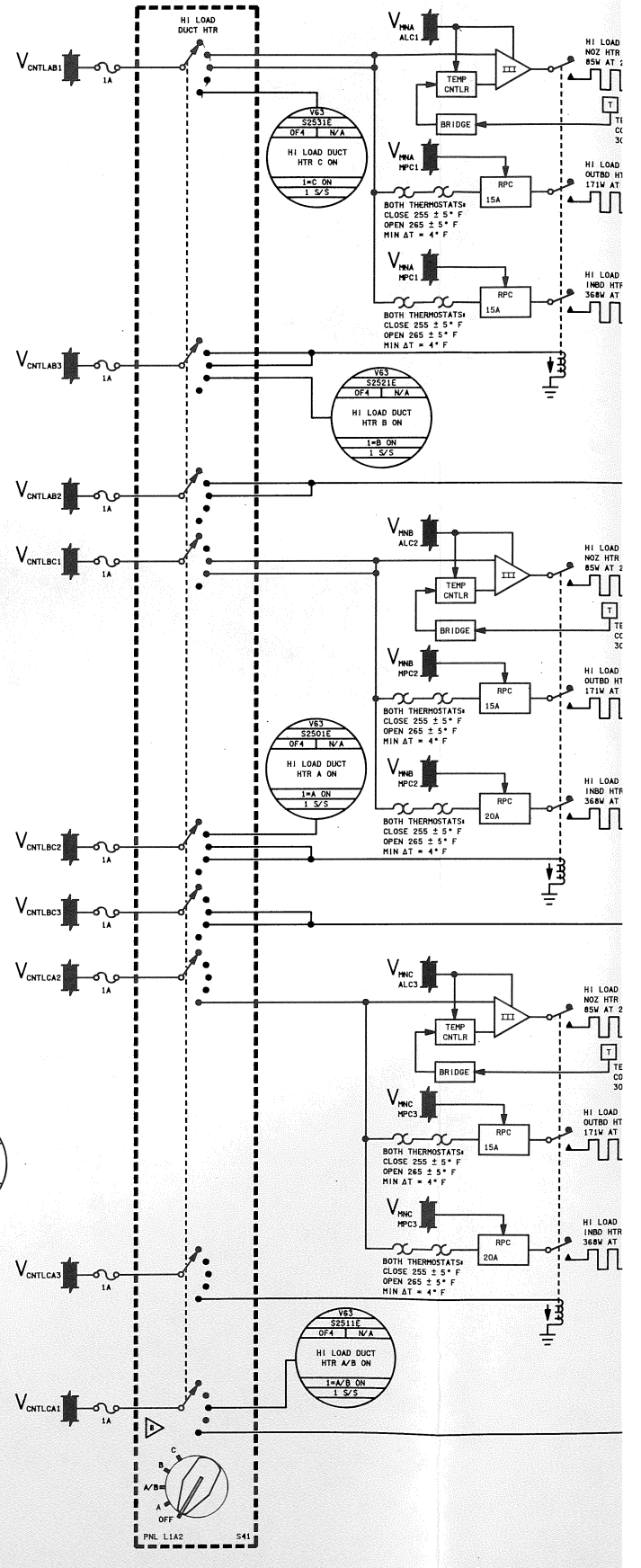

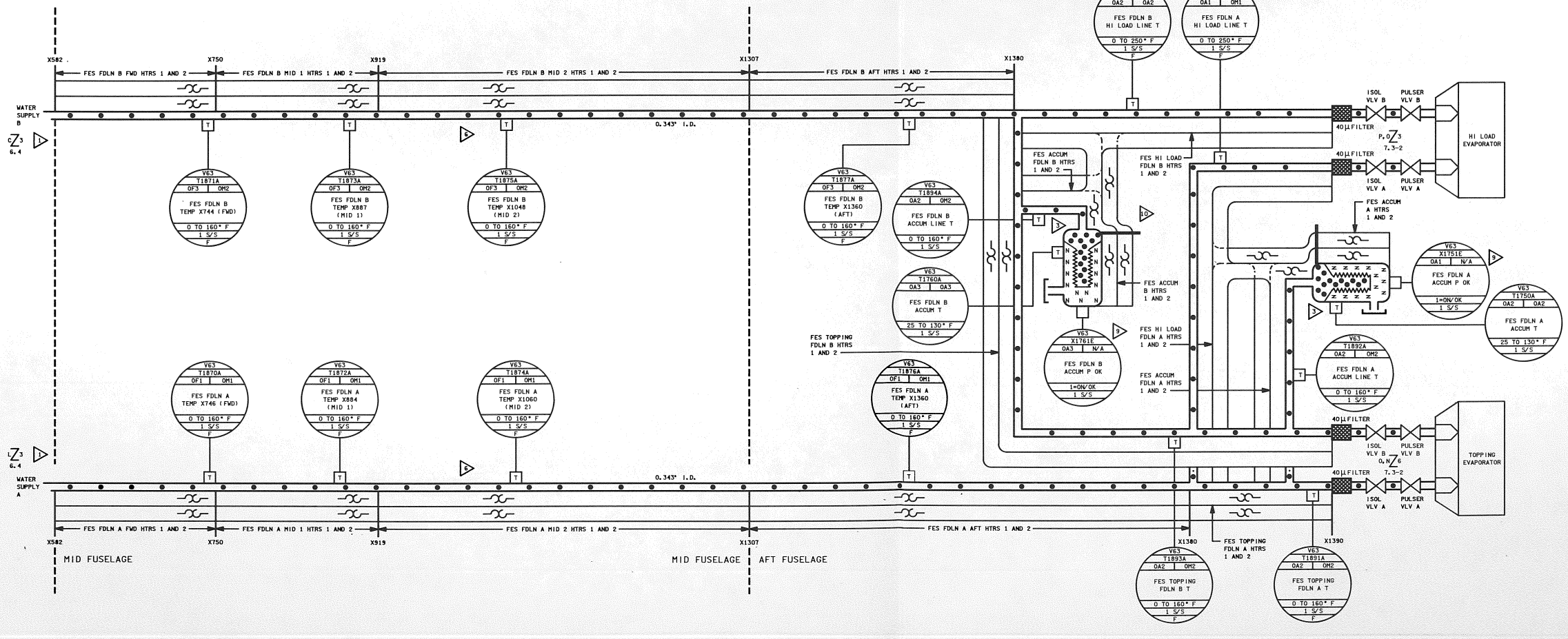

BASIC REV E-1

DATE: 06/01/92	NAME: MAG	VERSION: BPT-17
DATE: 11/17/92	NAME: BJB	VERSION: BPT-18
DATE: 12/18/92	NAME: VSH	VERSION: INK-8

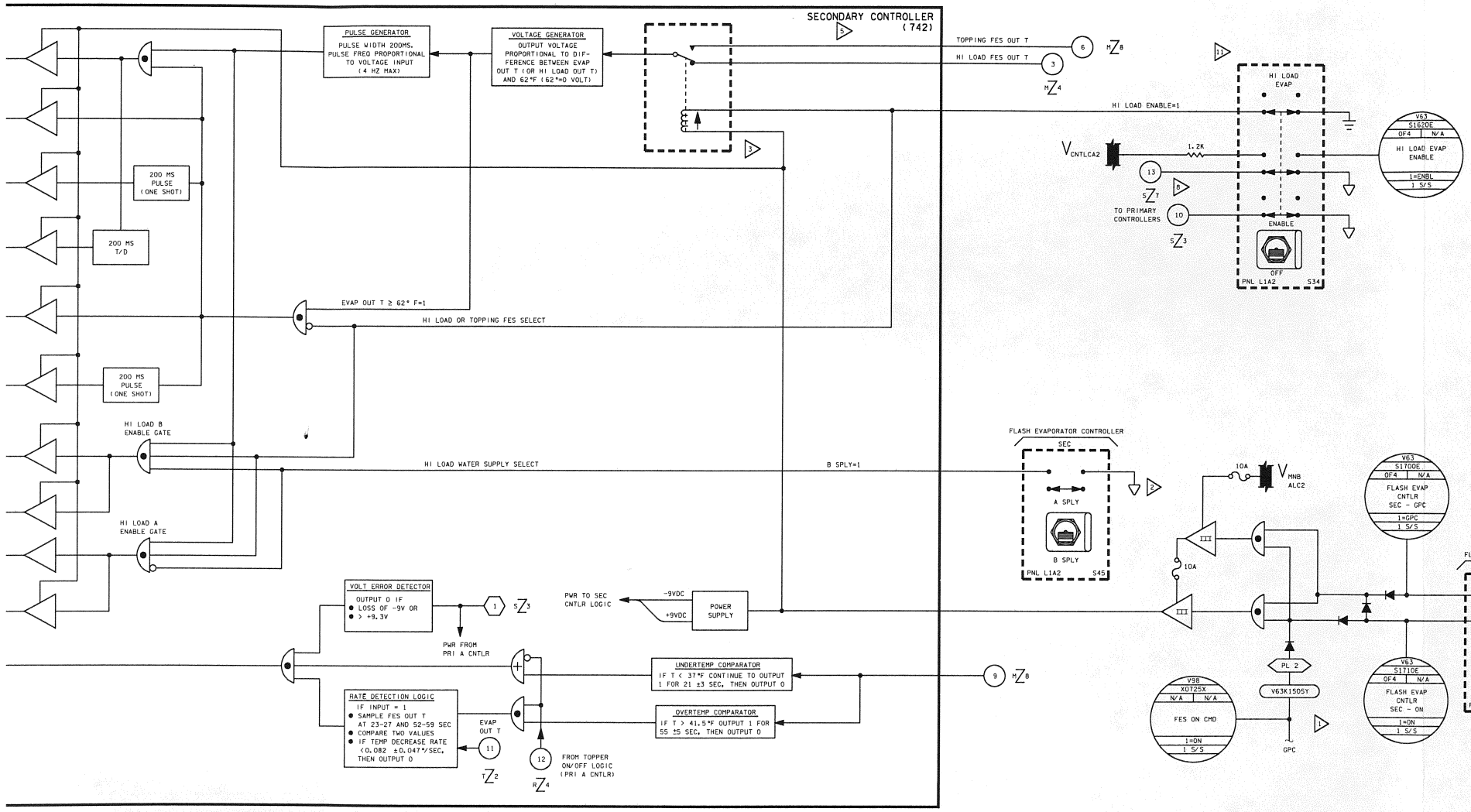

14 THE MIDPOINT TEMPERATURE SENSOR ASSEMBLY IS REDESIGNED ON OV-103 ONLY, CONSISTING OF A LARGER MASS OF METAL. THIS RESULTS IN A SLOWER RESPONSE FOR THE TEMPERATURE CHANGE RATE INPUT TO THE FES CONTROLLERS, MAKING OV-103 MORE SUSCEPTIBLE TO OVERTEMPERATURE SHUTDOWN DURING FULL-UP FES OPERATION

13 HI-LOAD EVAP NOMINAL MAX PULSE RATE:
DUTY CYCLE: 80.2
FREQUENCY: 4HZ
FLOW: 135 LBS/HR

12 TOPPING EVAP NOMINAL MAX PULSE RATE:
DUTY CYCLE: 80.2
FREQUENCY: 4HZ
FLOW: 50.4 LBS/HR

11 WHEN THE SECONDARY HI-LOAD IS ENABLED AFTER SECONDARY TOPPER USE, THE HI-LOAD PULSER VALVES INITIALLY PULSE AT SAME RATE AS PREVIOUSLY - SELECTED TOPPER VALVES. THIS COULD CAUSE AN UNDERTEMP SITUATION

10. TEMPERATURE SUMMARY:

ITEM	T, °F	SENSOR
PRI A/B CONTROL BAND	38.45 - 40	EVAP OUT T
MIN STARTUP FROM OFF	> 41.0	EVAP OUT T
STARTUP, AUTO FROM STANDBY	≥ 41 ±0.25	MIDPOINT T
STANDBY FROM OP	≤ 40 ±0.25	MIDPOINT T
HI-LOAD START TEMP	> 62 ±2	MIDPOINT T
HI-LOAD TO STANDBY	≤ 43.0	
UNDERTEMP SHUTDOWN	< 37.0 FOR TWO 20-SEC PERIODS AND dT/dt < 0.082 ± 0.047 DEG/SEC	
SEC CONTROLLER	62 ±2	MIDPOINT T FOR HI-LOAD, EVAP OUT T FOR TOPPER

9. REFER TO TABLE 7-I FOR DRAWING REFERENCES

8 LOGIC 1 IF HI LOAD EVAP ENABLED
LOGIC 0 IF HI LOAD EVAP OFF

7 FES HEAT REJECTION AND INLET TEMPERATURE LIMITS

CONTROLLER	FREON LOOPS OPERATING	FES OPERATING	MAXIMUM HEAT REJECTION (BTU/HR)		PREDICTED MAX INLET TEMP WITH CONTROLLED OUTLET °F	
			DESIGN	TEST	BYP FLOW *	RAD FLOW *
PRIMARY (T = 39°F) OUT	BOTH	BOTH	131,000	148,000	136	147
		TOPPING	30,000	39,000	66	69
	LOOP 1	BOTH	67,500	92,800	165	177
		TOPPING		24,600	73	76
	LOOP 2	BOTH	67,500	127,600	207	224
		TOPPING		37,600	89	95
SECONDARY (T = 62°F) OUT	BOTH	HI LOAD	67,500	113,100	138	146
		TOPPING	67,500	76,800	114	119
	LOOP 2	HILOAD		44,200	120	127

* FLOW RATES (LB/HR) FOR OV102 GROUND FLOW TEST
FCA IN "BYPASS" POSITION: LOOP 1 PUMP FLOW RATE 2935
LOOP 2 PUMP FLOW RATE 3087
FCA IN "RADIATOR" POSITION: LOOP 1 PUMP FLOW RATE 2657
LOOP 2 PUMP FLOW RATE 2692

6. CORES - .075 INCHES THICK CYLINDER, DUAL PASSAGE HX
14.5 INCHES LONG AND 11.5 INCHES I.D.
CONSTRUCTED OF ALUMINUM.
HIGH LOAD - FCL 1 FLOWS INSIDE PASSAGE/FCL 2 FLOWS OUTSIDE PASSAGE OF CORE
TOPPER - FCL 2 FLOWS INSIDE PASSAGE/FCL 1 FLOWS OUTSIDE PASSAGE OF CORE

5 SECONDARY CONTROLLER:
- NO SHUTDOWN LOGIC
- 62°F CNTL POINT
- WHEN HI LOAD SW OFF - TOPPER ENABLE (BOTH FEEDLINES) SECONDARY TOPPER USES BOTH A AND B FEEDLINES/PULSER VLVS
- SEC HILOAD USES FEEDLINE A OR B

4 PRIMARY CNTLR:
- A&B IDENTICAL EXCEPT FOR REDUNDANT SHUTDOWN LOGIC FROM SEC CONTROLLER TO A CNTLR
- 39 ±1°F CNTL POINT
- ALL LOGIC RESET AFTER PWR RESET
- PRI A USES FEEDLINE A
- PRI B USES FEEDLINE B

3 SOLID STATE SWITCH

2 INTERNAL LOGIC GROUND (±9 VDC GROUND)

NOTES: 1 WHEN SWITCH IS IN GPC POSITION, EVAPORATORS ARE COMMANDED ON DURING ASCENT (MM 103-106 OR TRANSITION TO 601) AND COMMANDED OFF AT ≈ 100,000 FEET DURING ENTRY (MM 305 OR MM 603)

16 •• - RATE FEEDBACK COMPENSATES FOR THERMAL LAG AND TRANSPORT TIME

15 ERROR SIGNAL PULSE FREQUENCY 0.066 HZ/DEG F OF TEMP DIFFERENCE BETWEEN REF SET POINT AND OUTLET TEMP

17 WHEN MIDPOINT TEMP IS < 40 ±0.25 DEG F, THE TOPPING FES IS IN STANDBY AND UNDERTEMP SHUTDOWN IS INHIBITED

18 INITIAL SHUTDOWN TEMP SENSOR READING IS TAKEN 5 SEC AFTER TURN-ON. IT IS COMPARED TO A SAMPLE 19-22 SEC LATER, BUT THE RESULT IS NOT USED. SUBSEQUENT SAMPLE COMPARISONS 29-32 SEC LATER ARE USED TO DETERMINE RATE. SHUTDOWN WILL OCCUR IF RATE IS < 0.082 ±0.047 DEG F/SEC

15 HI-LOAD ISO VLV AND PULSER VLV ARE PULSED SIMULTANEOUSLY

*3 FES 2

SIGNATURE		DATE	NATIONAL AERONAUTICS AND SPACE ADMINISTRATION LYNDON B. JOHNSON SPACE CENTER HOUSTON, TEXAS
DSGN	VIC ORTIZ	8/9/82	
DR			
ENGR	V. HOWARD		FLASH EVAPORATOR SUBSYSTEM
ENGR			
APP			
APP			SPACE SHUTTLE / DWG NO
OMNIPLAN	S.H. Kimball 1-21-93		ALL / 7.3
LTR E	PCN 2	126.5 X 34	PAGE / SHEET 2 OF 2

BASIC REV E-2

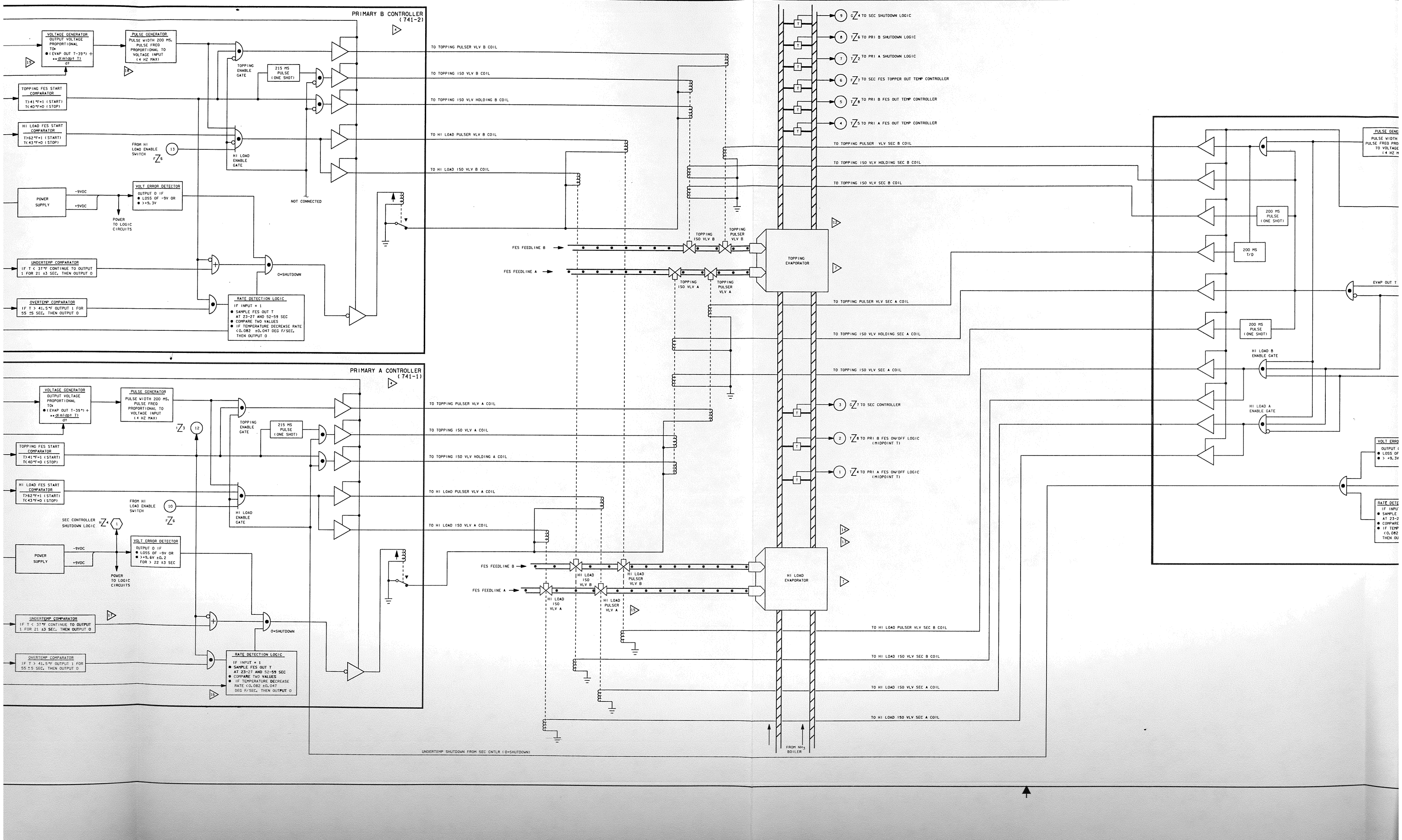

S
R
Q
P
O
N
M
L
K
J
PRIMARY B CONTROLLER (741-2)
VOLTAGE GENERATOR
OUTPUT VOLTAGE PROPORTIONAL TO
PULSE GENERATOR
PULSE WIDTH 200 MS. PULSE FREQ PROPORTIONAL TO VOLTAGE INPUT (4 HZ MAX)
TOPPING ENABLE GATE
215 MS PULSE (ONE SHOT)
TOPPING FES START COMPARATOR
HI LOAD FES START COMPARATOR
FROM HI LOAD ENABLE SWITCH
HI LOAD ENABLE GATE
NOT CONNECTED
POWER SUPPLY
-9VDC
+9VDC
VOLT ERROR DETECTOR
POWER TO LOGIC CIRCUITS
UNDERTEMP COMPARATOR
OVERTEMP COMPARATOR
0=SHUTDOWN
RATE DETECTION LOGIC
TO TOPPING PULSER VLV B COIL
TO TOPPING ISO VLV B COIL
TO TOPPING ISO VLV HOLDING B COIL
TO HI LOAD PULSER VLV B COIL
TO HI LOAD ISO VLV B COIL
PRIMARY A CONTROLLER (741-1)
TO TOPPING PULSER VLV A COIL
TO TOPPING ISO VLV A COIL
TO TOPPING ISO VLV HOLDING A COIL
TO HI LOAD PULSER VLV A COIL
TO HI LOAD ISO VLV A COIL
SEC CONTROLLER SHUTDOWN LOGIC
FES FEEDLINE B
FES FEEDLINE A
TOPPING ISO VLV B
TOPPING PULSER VLV B
TOPPING ISO VLV A
TOPPING PULSER VLV A
TOPPING EVAPORATOR
HI LOAD ISO VLV B
HI LOAD PULSER VLV B
HI LOAD ISO VLV A
HI LOAD PULSER VLV A
HI LOAD EVAPORATOR
TO SEC SHUTDOWN LOGIC
TO PRI B SHUTDOWN LOGIC
TO PRI A SHUTDOWN LOGIC
TO SEC FES TOPPER OUT TEMP CONTROLLER
TO PRI B FES OUT TEMP CONTROLLER
TO PRI A FES OUT TEMP CONTROLLER
TO TOPPING PULSER VLV SEC B COIL
TO TOPPING ISO VLV HOLDING SEC B COIL
TO TOPPING ISO VLV SEC B COIL
TO TOPPING PULSER VLV SEC A COIL
TO TOPPING ISO VLV HOLDING SEC A COIL
TO TOPPING ISO VLV SEC A COIL
TO SEC CONTROLLER
TO PRI B FES ON/OFF LOGIC (MIDPOINT T)
TO PRI A FES ON/OFF LOGIC (MIDPOINT T)
TO HI LOAD PULSER VLV SEC B COIL
TO HI LOAD ISO VLV SEC B COIL
TO HI LOAD ISO VLV SEC A COIL
TO HI LOAD ISO VLV SEC A COIL
FROM NH3 BOILER
UNDERTEMP SHUTDOWN FROM SEC CNTLR (0=SHUTDOWN)
200 MS PULSE (ONE SHOT)
200 MS T/D
HI LOAD B ENABLE GATE
HI LOAD A ENABLE GATE
EVAP OUT T

DATE: 12/18/92 | NAME: VSH | VERSION: INK.8

W V U T S R Q P O N

8 7 6 5 4 3 2 1

PRIMARY B CONTROLLER (741-2)

PRIMARY A CONTROLLER (741-1)

FLASH EVAP CONTROLLER PRI B

FLASH EVAP CONTROLLER PRI A

$V_{CNTLAB1}$ 1.2K $V_{CNTLAB2}$ 619Ω

$V_{CNTLCA1}$ 1.2K $V_{CNTLCA2}$ 619Ω

GPC

OFF ON

PNL L1A2 S32

V63 S1650E OF4 N/A FLASH EVAP CNTLR PRI B - GPC 1=GPC 1 S/S

V63 S1660E OF4 N/A FLASH EVAP CNTLR PRI B - ON 1=ON 1 S/S

V63 S1660E OF4 N/A FLASH EVAP CNTLR PRI A - ON 1=ON 1 S/S

V63 S1650E OF4 N/A FLASH EVAP CNTLR PRI A - GPC 1=GPC 1 S/S

V_{MNA} ALC1 10A

V_{MNC} ALC3 10A

PL 1 V63K1501Y

PL 2 V63K1509Y

V98 X0725X N/A N/A FES ON COMMAND 1=ON 1 S/S

VOLTAGE GENERATOR
OUTPUT VOLTAGE PROPORTIONAL TO
● (EVAP OUT T-39°) + ●● dT(dlpt T)/dt

PULSE GENERATOR
PULSE WIDTH 200 MS. PULSE FREQ PROPORTIONAL TO VOLTAGE INPUT (4 HZ MAX)

TOPPING FES START COMPARATOR
T>41°F=1 (START)
T<40°F=0 (STOP)

HI LOAD FES START COMPARATOR
T>62°F=1 (START)
T<43°F=0 (STOP)

TOPPING ENABLE GATE

215 MS PULSE (ONE SHOT)

HI LOAD ENABLE GATE

FROM HI LOAD ENABLE SWITCH

SEC CONTROLLER SHUTDOWN LOGIC

POWER SUPPLY -9VDC +9VDC

POWER TO LOGIC CIRCUITS

VOLT ERROR DETECTOR
OUTPUT 0 IF
● LOSS OF -9V OR
● >+5.6V ±0.2 FOR > 22 ±3 SEC

NOT CONNECTED

UNDERTEMP COMPARATOR
IF T < 37°F CONTINUE TO OUTPUT 1 FOR 21 ±3 SEC, THEN OUTPUT 0

OVERTEMP COMPARATOR
IF T > 41.5°F OUTPUT 1 FOR 55 ±5 SEC, THEN OUTPUT 0

0=SHUTDOWN

RATE DETECTION LOGIC
IF INPUT = 1
● SAMPLE FES OUT T AT 23-27 AND 52-59 SEC
● COMPARE TWO VALUES
● IF TEMPERATURE DECREASE RATE <0.082 ±0.047 DEG F/SEC, THEN OUTPUT 0

TO TOPPING PULSER VLV B COIL
TO TOPPING ISO VLV B COIL
TO TOPPING ISO VLV HOLDING B COIL
TO HI LOAD PULSER VLV B COIL
TO HI LOAD ISO VLV B COIL

TO TOPPING PULSER VLV A COIL
TO TOPPING ISO VLV A COIL
TO TOPPING ISO VLV HOLDING A COIL
TO HI LOAD PULSER VLV A COIL
TO HI LOAD ISO VLV A COIL

FES FEEDLINE B
FES FEEDLINE A

TOPPING ISO VLV B
TOPPING PULSER VLV B
TOPPING ISO VLV A
TOPPING PULSER VLV A
TOPPING EVAPORATOR

HI LOAD ISO VLV B
HI LOAD PULSER VLV B
HI LOAD ISO VLV A
HI LOAD PULSER VLV A
HI LOAD EVAPORATOR

FROM NH3 BOILER

UNDERTEMP SHUTDOWN FROM SEC CNTLR (0=SHUTDOWN)

BASIC REV E-2

DATE: 06/12/92	NAME: VSH	VERSION: BPT: 23
DATE: 06/25/92	NAME: VSH	VERSION: INK: 3
DATE: 10/02/92	NAME: BJT	VERSION: INK: 4

54.52% OF TOTAL FLOW

45.48% OF TOTAL FLOW

4.53% OF TOTAL FLOW

40.95% OF TOTAL FLOW

AVIONICS COLD PLATES (FLIGHT DECK MDM) 1 SQ FT

MDM COLD PLATES: (146 BTU/HR -MAX LOAD)
MDM QF 4

0.161 INCH ORIFICE

0.161 INCH ORIFICE

2

V61 T2650A (QF3 | QF3) AV BAY 2 AIR OUT TEMP 45 TO 145° F 1 S/S C&W

ECLSS SC3 AC10B NZ7 6.8

NOMINAL 1 FAN AIR FLOW 875 LBS/HR

FAN B 180 WATTS

FAN A 180 WATTS

QZ6 6.2-1 TO C&W (11)

AIR/H_2O HX

QZ4 6.2

HXX (6320 BTU/HR - MAX LOAD)

AVIONICS BAY 2 26.76% OF TOTAL FLOW

COLD PLATES 30 SQ FT

ECLSS SC 3 AC10B

ECLSS SC 3 AC10B

NZ3 6.8

NZ3 6.8

V61 T2618A (QF3) LP 1 H_2O AV BAY 2 HX OUT T 32 TO 122° F 1 S/S

V61 T2627A (QF1 | QF1) LP 1 H_2O AV BAY 2 C/P OUT T 25 TO 130° F 1 S/S

V61 T2619A (QF3) LP 2 H_2O AV BAY 2 HX OUT T 32 TO 122° F 1 S/S

V61 T2628A (QF2 | QF2) LP 2 H_2O AV BAY 2 C/P OUT T 25 TO 130° F 1 S/S

0.116 INCH ORIFICE

0.116 INCH ORIFICE

3A

V61 T2661A (QF1 | QF1) AV BAY 3 AIR OUT TEMP 45 TO 145° F 1 S/S C&W

ECLSS SC4 AC20B NZ7 6.8

NOMINAL 1 FAN AIR FLOW 675 LBS/HR

FAN B 180 WATTS

FAN A 180 WATTS

QZ6 6.2-1 TO C&W (12)

AIR/H_2O HX

QZ2 6.2

HXX (3000 BTU/HR - MAX LOAD)

AVIONICS BAY 3A 39.33% OF TOTAL FLOW

COLD PLATES 32 SQ FT

ECLSS SC 4 AC20B

ECLSS SC 4 AC20B

NZ7 6.8

NZ7 6.8

V61 T2621A (QF1) LP 1 H_2O AV BAY 3A HX OUT T 32 TO 122° F 1 S/S

V61 T2630A (QF1 | QF1) LP 1 H_2O AV BAY 3A C/P OUT T 25 TO 130° F 1 S/S

V61 T2662A (QF1 | QF1) LP 2 H_2O AV BAY 3A HX OUT T 32 TO 122° F 1 S/S

V61 T2631A (QF2 | QF2) LP 2 H_2O AV BAY 3A C/P OUT T 25 TO 130° F 1 S/S

BAY 3A
COLD PLATES: (4900 BTU/HR - MAX LOAD)
NTWK SIG PROC NO 1, NO 2
S-BD FM XMTR NO 1, NO 2
S-BD XPNDR NO 1, NO 2
S-BD PWR AMP NO 1, NO 2
S-BD PREAMP ASSY NO 1, NO 2
UHF ATC/EVA SCVR (FLT 7)
COMSEC UNIT NO 1, NO 2 (DOD ONLY)
KU-BD SIG PROC (FLT 5)
KU-BD RAD/COM ASSY NO 1, NO 2 (FLT 5)
DED SIG COND OF 3
AC30A INV NO 7
AC30B INV NO 8
AC30C INV NO 9
LD CNTLR ASSY NO 3
PWR CNTLR ASSY NO 3
GRND CND INT UNIT A, UNIT B
MOTOR CNTL ASSY NO 3
MDM FF 3
MDM OF 3
S-BD ANT SW

3B

AVIONICS BAY 3B 6.15% OF TOTAL FLOW

COLD PLATES 5 SQ FT

BAY 3B
COLD PLATES: (100 BTU/HR - MAX LOAD)
KU-BD COMM B ELEC ASSY NO 1
KU-BD COMM B ELEC ASSY NO 2
MTU

CABIN MID FUSELAGE STA BULKHEAD

3.55% OF TOTAL FLOW

PAYLOAD BAY FLOOD LIGHT COLD PLATE 47.6 SQ IN

800 BTU/HR - MAX LOAD

Xo=576
Yo=0
Zo=488

WINDOW THERMAL CONDITIONING SYSTEM (W1, W2, W3)

PORT PORT STBD STBD

WINDOW THERMAL CONDITIONING SYSTEM (W4, W5, W6, W8, W9)

475 BTU/HR - MAX LOAD

WINDOW THERMAL CONDITIONING SYSTEM (W7, W10)

30V61 TP62

30V61 TP63

1

V61 T2645A (QF2 | QF2) AV BAY 1 AIR OUT TEMP 45 TO 145° F 1 S/S C&W

ECLSS SC2 AC30B NZ7 6.8

NOMINAL 1 FAN AIR FLOW 875 LBS/HR

FAN B 180 WATTS

FAN A 180 WATTS

QZ6 6.2-1 TO C&W (10)

AIR/H_2O HX

QZ7 6.2

HXX (6000 BTU/HR - MAX LOAD)

AVIONICS BAY 1 27.76% OF TOTAL FLOW

COLD PLATES 25 SQ FT

ECLSS SC 2 AC30B

ECLSS SC 2 AC30B

NZ7 6.8

NZ7 6.8

V61 T2615A (QF2) LP 1 H_2O AV BAY 1 HX OUT T 32 TO 122° F 1 S/S

V61 T2624A (QF2 | QF2) LP 1 H_2O AV BAY 1 C/P OUT T 25 TO 130° F 1 S/S

V61 T2618A (QF2) LP 2 H_2O AV BAY 1 HX OUT T 32 TO 122° F 1 S/S

V61 T2625A (QF2 | QF2) LP 2 H_2O AV BAY 1 C/P OUT T 25 TO 130° F 1 S/S

0.125 INCH ORIFICE

0.125 INCH ORIFICE

BAY 2
COLD PLATES:
(2950 BTU/HR - MAX LOAD)
RJDF NO 2A
RJDF NO 2B
RADAR ALT NO 2
PAYLOAD INTERR NO 1 (FLT 5)
PAYLOAD INTERR NO 2 (FLT 5)
PAYLOAD SIG PROC NO 1 (FLT 5)
PAYLOAD SIG PROC NO 2 (FLT 5)
PCMMU NO 2
OPS 1 RCDR (MAINT LOOP)
OPS 2 RCDR (MAINT LOOP)
DED SIG COND OF 2
AC20A INV NO 4
AC20B INV NO 5
AC20C INV NO 6
LD CNTLR ASSY NO 2
PWR CNTLR ASSY NO 2
MOTOR CNTL ASSY NO 2
MDM FF 2
MDM FF 4
MASS MEM NO 2
MDM OF 2
MDM PL 2

BAY 1
COLD PLATES:
(2950 BTU/HR - MAX LOAD)
RJDF NO 1A
RJDF NO 1B
RADAR ALT NO 1
AUDIO CNTR NO 1
AUDIO CNTR NO 2
PCMMU NO 1
PAYLOAD RCDR
DED SIG COND OF 1
PAYLOAD DATA INTRLVR (FLT 5)
AC10A INV NO 1
AC10B INV NO 2
AC10C INV NO 3
LD CNTLR ASSY NO 1
PWR CNTLR ASSY NO 1
EVLSS PWR SUP/BAT CHGR (FLT 7)
MOTOR CNTL ASSY NO 1
MDM FF 1
MASS MEM NO 1
MDM OF 1
MDM LF 1 (GSE)
MDM PL 1

80V61 TP60

80V61 TP61

80V61 TP56

80V61 TP57

0.187 INCH ORIFICE

0.187 INCH ORIFICE

LB/HR/LOOP

$V_{CNTLAB2}$

ICHANGER

P

S

18. AC10A AND AC20A POWERS THE PUMP A AND B 'ON' DISCRETE

17. SEE TABLE 7-1 FOR DRAWING REFERENCES

16. UNLESS OTHERWISE SPECIFIED, SENSOR RECEIVES ITS POWER FROM ITS SIGNAL CONDITIONER

15. H_2O LOOP 1 PUMP A(PUMP B)

V_{MNA} FPC1 (V_{MNB} FPC2) MCA LOGIC PNA(MNB) FWD 1(2) ON OFF RPC 5A V_{MNA} FHC1 (V_{MNB} FHC2) $V_{CNTLAB3}$ ($V_{CNTLBC3}$) PNL MA73C*A SL (PNL MA73C*A) (SS)

14. SODB, AMENDMENT 204:

VEH	LCH FLOW (LB/HR)	BYP FLOW (LB/HR)
099	463-1174	0-922
102	500-1280 *	0-880 *
103	420-1169	0-855
104	482-1200	0-831

* RI DOC. SEH-ITA-82-176T

13. IF NECESSARY, IT IS POSSIBLE TO PERFORM 1FM TO SWAP THE POWER SOURCES BETWEEN PUMP B OF LOOP 1 AND PUMP OF LOOP 2. PUMP A OF LOOP 1 IS INACCESSIBLE TO CREW PLUS IT HAS A SHORT POWER CABLE

12. H_2O LOOP COMPONENTS:
QUAL PRESSURE = 90 ±5 PSIG
PROOF PRESSURE = 135 ±5 PSIG
BURST PRESSURE = 180 PSIG

11. FLOW RATE MEASUREMENT IS BASED UPON PRESSURE DELTA ACROSS INTERCHANGER AND THUS RESPONSIVE TO LOOP TEMPERATURE FLUCTUATIONS

10. PER DVT TESTING - PUMP PERFORMANCE ON 2 ACG, 4 HR TEST:
5% AVG DECREASE IN PUMP ΔP
47.3% AVG DECREASE IN LOOP FLOW
PUMP MOTOR HAS BEEN SPECIFIED FOR A LIFE OF 168 HOURS OPERATING ON 2 PHASES, BUT NO DATA IS AVAILABLE TO SUPPORT THIS

8. ALL 'MAXLOAD' HEAT LOADS ARE PER THE LATEST STS-3 ANALYSIS AND DO NOT REFLECT ALL EQUIPMENT ON.

7. H_2O LOOP LINES ARE 0.25 INCH STAINLESS STEEL TUBES WITH 0.25 INCH FIBERGLASS (TO 150OO) WRAP (PART NO.: MB0135-024) AND CRES PROTECTIVE COVER. LINES TO FLOOD LIGHT COLDPLATE ARE 0.125 INCH TUBES WRAPPED TOGETHER WITH AL FOIL, SECURED WITH AL TAPE AND THEN COVERED BY 0.25 INCH FIBERGLASS BLANKET (PART NO.: MB0135-069) INSULATION

6. THE MDM PL2 SIGNAL WILL BE INITIALIZED IN THE BFS TO 1=ON FOR ALL PHASES. WHEN THE BFS HAS CONTROL OF THE PAYLOAD BUSES, THE LOOP 2 PUMP WILL BE ACTIVATED ANY TIME THE SW IS PLACED IN THE GPC POS

5. A GPC PUMP CYCLE SEQUENCE WILL BE INITIATED ANY TIME A TRANSITION IS MADE INTO SM OPS 2 (OR SM OPS 4). THE SEQUENCE WILL ISSUE A 6-MINUTE "PUMP ON" CMD FOLLOWED BY A 50-HOUR "PUMP OFF" CMD. THIS SEQUENCE OF CMDS WILL BE CONTINUOUSLY REPEATED WHILE IN SM OPS 2 (OR 4). THE ON-TIME (V92W0641C = 6 MIN) AND THE OFF-TIME (V92W0640C = 3000 MIN) ARE MEDABLE IN UNIT OF MINUTES AND HAVE NO UPPER OR LOWER LIMITS. CHANGING THE MEDABLE VALUES WILL HAVE NO EFFECT UNTIL THE NEXT CYCLE UNLESS OPS 2 (OR 4) IS DROPPED/RECALLED

4. THE AUTO POSITION IS USED FOR ORBIT OPERATIONS ONLY. ASCENT/ENTRY WILL USE MANUAL @ 950 LB/HR DUE TO THE HIGH HEAT LOADS AND THE 950 LB/HR NO. BEING THE OPTIMUM FLOW RATE DETERMINED BY ANALYSIS

3. THE H_2O BYPASS VALVE NON-ELECTRIC MANUAL OVERRIDE CONTROLS ARE LOCATED BELOW THE MID DECK FLOOR IN THE ECLSS BAY ON THE TOP OF THE VALVE ACTUATOR HOUSING. THEY WILL BE USED ONLY IN THE EVENT OF A TOTAL ELECTRICAL DRIVE FAILURE

2. LOOP VOLUME = 1810 CU IN = 65.3 LB OF H_2O (ACCUM NOT INCLUDED)
ACCUM:
VOLUME:
METAL BELLOWS FULLY EXTENDED = N_2O_4= 56 CU IN (1.81 LBS) GN_2= 100 CU IN
METAL BELLOWS FULLY COMPRESSED = N_2O_4= 6 CU IN (0.19 LBS) GN_2= 150 CU IN
N_2 CHARGE: 19 - 35 PSI AT 70 - 120 °F
VARIATION WITH TEMPERATURE = ~ 1 %/°F ~ 0.1 PSI/°F

NOTES: 1. REPRESENTATION OF TRIAC CONTROLLED SOLID STATE RELAY

*4 ARS H_2O

SIGNATURE		DATE	NATIONAL AERONAUTICS AND SPACE ADMINISTRATION LYNDON B. JOHNSON SPACE CENTER HOUSTON, TEXAS
DSGN	LINDA DUMIS	10/16/78	
DR			ARS H_2O COOLANT LOOPS
ENGR	J. SPIVEY		
ENGR		7/13/92	
APP		7/15/92	
APP			SPACE SHUTTLE
OMNIPLAN	S.K. Kimbrough	10-5-92	ALL
LTR	E	PCN 2	126.5 X 34

DWG NO 7.4

PAGE SHEET 1 OF 1

BASIC REV E-2

S R Q P O N M L K J I

LOOP 1 PUMP/ACCUMULATOR PACKAGE

LOOP 2 PUMP/ACCUMULATOR PACKAGE

LOOP 2 H_2O BYPASS CNTLR

LOOP 1 H_2O BYPASS CNTLR

CABIN

MID FUSELAGE
576 BULKHEAD

INTERCHANGER

AVIONICS BAY 3B
6.1% OF TOTAL FLOW

BAY 3B
COLD PLATES: (100 BTU/HR - MAX)
KU-BD COMM B ELEC ASSY NO 1
KU-BD COMM B ELEC ASSY NO 2
MTU

COLD PLATES
5 SQ FT

AVIONICS COLD PLATES (FLIGHT DECK MDM)
1 SQ FT

54.52% OF TOTAL FLOW

45.48% OF TOTAL FLOW

4.53% OF TOTAL FLOW

40.95% OF TOTAL FLOW

0.161 INCH ORIFICE

0.187 INCH ORIFICE

BYPASS FLOW ADJUSTABLE FROM 0 TO 1000 LB/HR/LOOP

INTERCHANGER FLOW ADJUSTABLE FROM 450 TO 1200 LB/HR/LOOP

48300 BTU/HR MAX LOAD

2520 BTU/HR - MAX LOAD

16300 BTU/HR - MAX LOAD

10120 BTU/HR - MAX LOAD

4000 BTU/HR - MAX LOAD

TOTAL LCVG FLOW ~ 500 LB/HR

CONTROLLER TEMP

(FULL AT 65.5° F CONT TEMP - AUTO MODE)

1.0 ± 0.1 MIN TRAVEL TIME FROM FULL BYPASS TO FULL INTERCHANGER

0.1 MIN TRAVEL TIME FULL BYPASS TO FULL INTERCHANGER

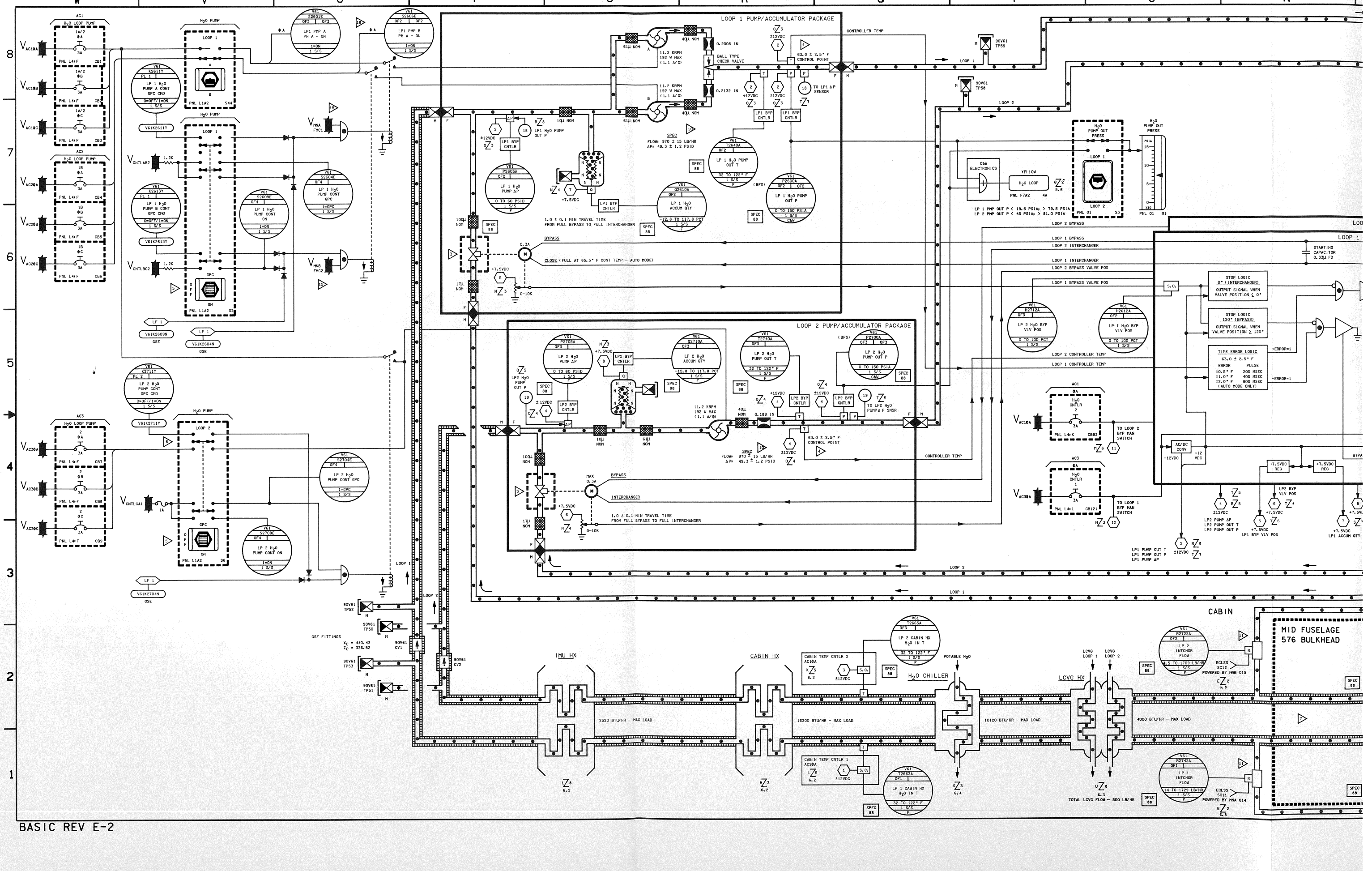
LOOP 1 PUMP/ACCUMULATOR PACKAGE
LOOP 2 PUMP/ACCUMULATOR PACKAGE
CONTROLLER TEMP
BALL TYPE CHECK VALVE
BYPASS
INTERCHANGER
CABIN
MID FUSELAGE
576 BULKHEAD
IMU HX
CABIN HX
H2O CHILLER
LCVG HX
2520 BTU/HR - MAX LOAD
16300 BTU/HR - MAX LOAD
10120 BTU/HR - MAX LOAD
4000 BTU/HR - MAX LOAD
GSE FITTINGS

BASIC REV E-2

DATE: 10/14/88	NAME: MDU	VERSION: BPT-9
DATE: 10/19/88	NAME: BCH	VERSION: INR-4
DATE: 08/18/90	NAME: MAG	VERSION: INR-5

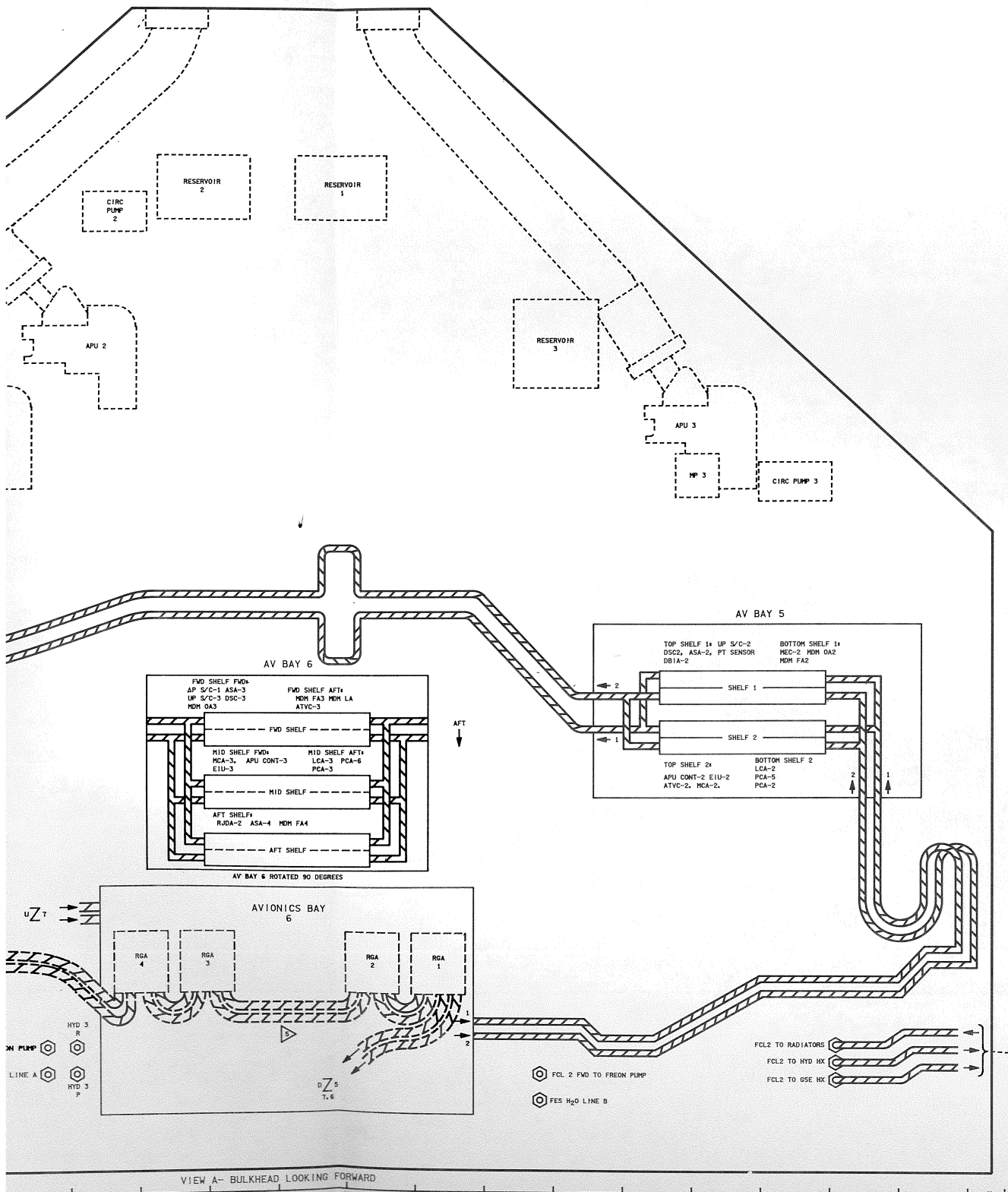

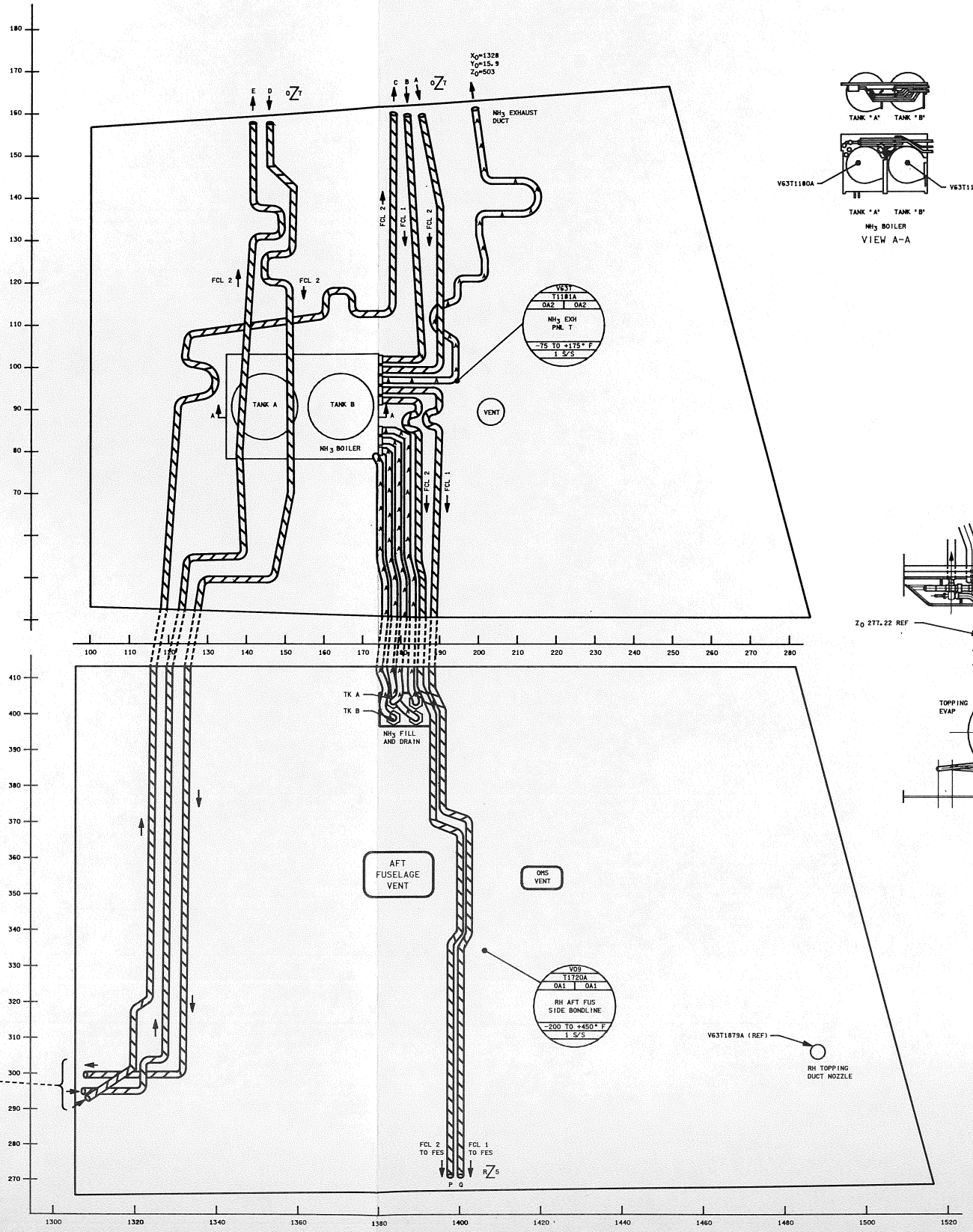

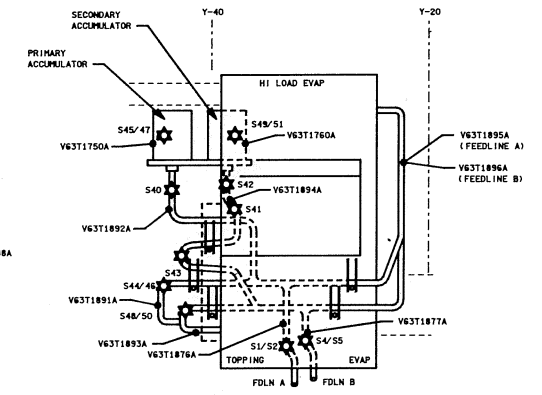

LOOKING FORWARD

FES HEATER ROUTING

THERMOSTAT	FEEDLINE	HTR SYS	HTR COVERAGE
S1	A	1	X1307 TO HI LD/TOPPER TEE
S2	A	2	SAME
S3	B	1	SAME
S4	B	2	SAME
S40	A	1	TOPPING LINE TEE TO ACCUMULATOR
S41	A	2	SAME
S42	B	1	SAME
S43	B	2	SAME
S44	A	1	HI LD/TOPPER TEE TO TOPPER VALVES
S45	A	1	ACCUMULATOR A AND HI LOAD LINE FROM HI LD/TOPPER TEE TO HI LOAD VALVES
S46	A	2	SAME AS S44
S47	A	2	SAME AS S45
S48	B	1	SAME AS S44
S49	B	1	SAME AS S45
S50	B	2	SAME AS S44
S51	B	2	SAME AS S45

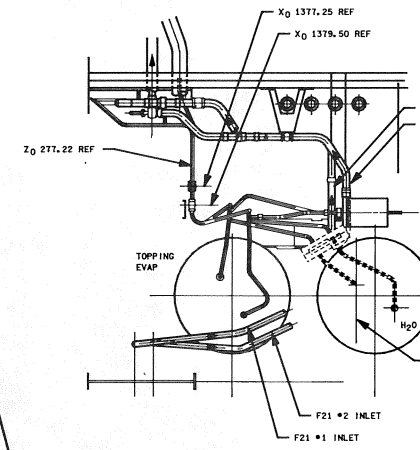

6. SEE TABLE 7-I FOR VENDOR DRAWING REFERENCES
5. RGA ROUTING FORWARD OF 1302 BULKHEAD REF. DRAWING 7.6
4. Xp Yp Zp OMS POD COORDINATE SYSTEM AXIS DESIGNATION
3. TUBE ROUTING AND QUANTITY APPROXIMATE
2. REFERENCE DWG 7.3 PAGE 1 OF 2 FOR HEATER WATTAGES.

NOTES: 1. LEGEND

OPERATIONAL INSTRUMENTATION ●

HEATED AND INSULATED ---------- CONTROL THERMOSTAT (T/S) ✡ XXXX-T/S ID

FREON

AMMONIA

H_2O

5 TAF

SIGNATURE		DATE	NATIONAL AERONAUTICS AND SPACE ADMINISTRATION LYNDON B. JOHNSON SPACE CENTER HOUSTON, TEXAS
DSGN	MIKE BECKER	9/1/83	
DR			
ENGR	J. SPIVEY	8/17/90	THERMAL AFT FUSELAGE
ENGR		8-21-90	
APP		8/20/90	
APP			SPACE SHUTTLE / DWG NO 7.5
OMNIPLAN		8-8-90	ALL
LTR E	PCN		126.5 X 34 PAGE SHEET 1 OF 1

BASIC REV E

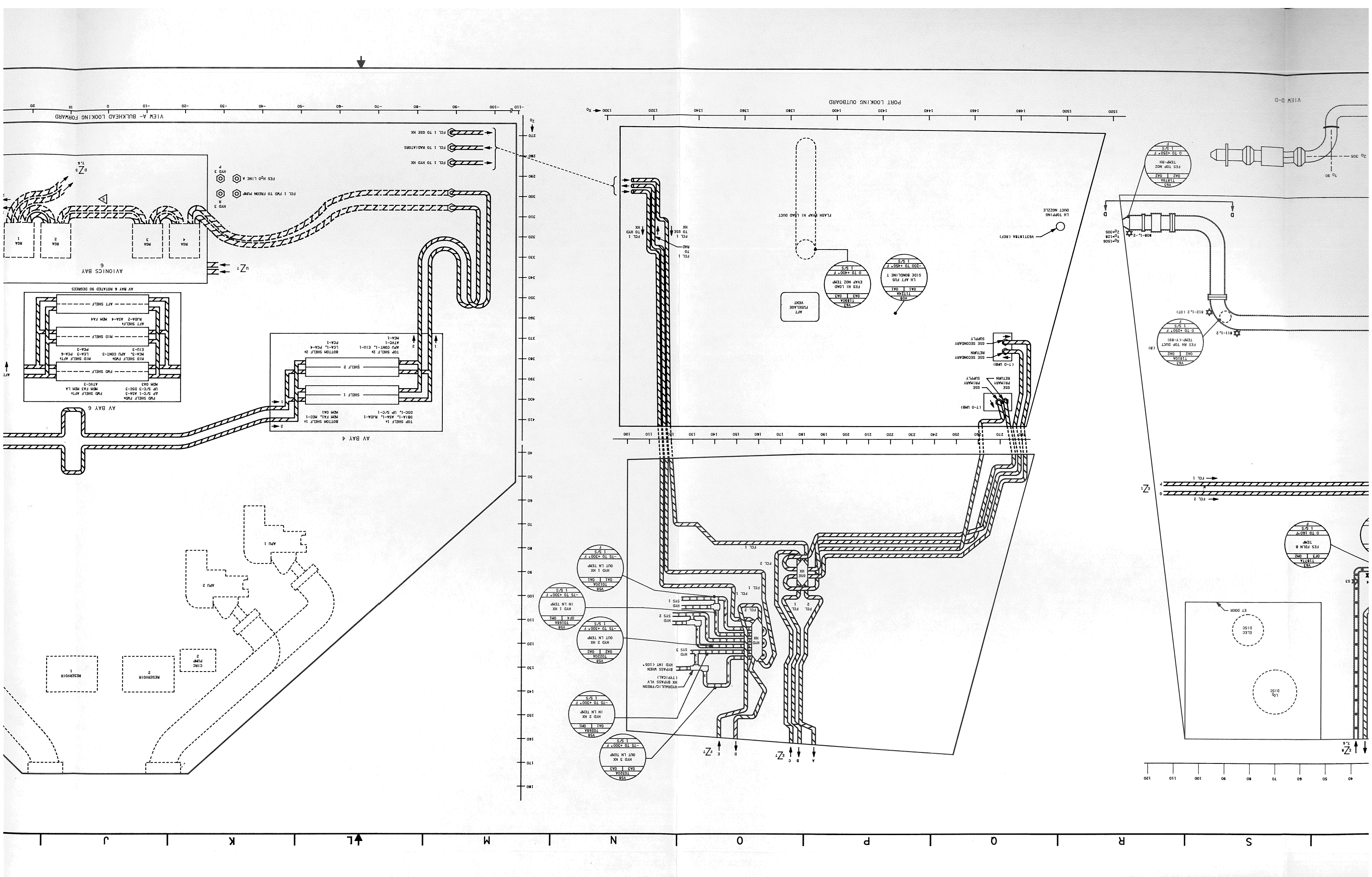
VIEW A– BULKHEAD LOOKING FORWARD
PORT LOOKING OUTBOARD
VIEW D-D
AV BAY 6
AV BAY 4
AV BAY 6 ROTATED 90 DEGREES
AVIONICS BAY 6
FCL 1 TO OSE HX
FCL 1 TO RADIATORS
FCL 1 TO HYD HX
FCL 1 FWD TO FREON PUMP
FES H2O LINE A
FLASH EVAP HI LOAD DUCT
LH TOPPING DUCT NOZZLE
V63718TBA (4ET)
AFT FUSELAGE VENT
FCL 1 TO RAD
FCL 1 TO OSE HX
FCL 1 TO HYD HX
FES HI LOAD EVAP NOZ TEMP
LH AFT FUS SIDE BONDLINE T
FES TOP NOZ TEMP-MA
FES DH TOP DUCT TEMP-(Y-89)
FES FDLN B TEMP
ET DOOR
ELEC DISC
LOX DISC
RESERVOIR 1
RESERVOIR 2
CIRC PUMP 2
APU 1
APU 2
HYD 3 P
HYD 3 R
HYD 3 S
RSA 1
RSA 2
RSA 3
RSA 4
SHELF 1
SHELF 2
TOP SHELF 1x
BOTTOM SHELF 1x
TOP SHELF 2x
BOTTOM SHELF 2x
FWD SHELF
MID SHELF
AFT SHELF
HYD 1 HX OUT LN TEMP
HYD 1 HX IN LN TEMP
HYD 2 HX OUT LN TEMP
HYD 2 HX IN LN TEMP
HYD 3 HX OUT LN TEMP
HYDRAUL/FREON HX BYPASS VLV (TYPICAL)
BYPASS WHEN HYD INT <105°
-75 TO +300° F
-200 TO +450° F
0 TO +400° F
0 TO +250° F
0 TO 160°F
1 S/S
T10234A
T10235A
T10236A
T11823A
T11824A
T11831A
T11871A
T11873A
V58
V63
V64
V66
V67
V68
V69
OA1
OA2
OA3
OM1
OM2
OR3
OZ4
(T-0 LMB)
OSE PRIMARY SUPPLY
OSE PRIMARY RETURN
OSE SECONDARY SUPPLY
OSE SECONDARY RETURN
B08-1,-2
B11-1,2
B12-1,2 (OT)
(8)
X_0=1506
Y_0=128
Z_0=305
Y_0 90
Z_0 305
Z_0
Y_0
X_0
Z^1
Z^5
Z^6
Z^7
Z^8
$Z^{5.3}$
$Z^{7.6}$
$Z^{T.6}$
$Z^{T.5}$
$Z^{T.7}$
$Z^{T.8}$
$Z^{T.9}$
$Z^{T.10}$
$Z^{T.11}$
$Z^{T.12}$
$Z^{T.13}$
$Z^{T.14}$
$Z^{T.15}$
$Z^{T.16}$
$Z^{T.17}$
$Z^{T.18}$
$Z^{T.19}$
$Z^{T.20}$
$Z^{T.21}$
$Z^{T.22}$
$Z^{T.23}$
$Z^{T.24}$
$Z^{T.25}$
$Z^{T.26}$
$Z^{T.27}$
$Z^{T.28}$
$Z^{T.29}$
$Z^{T.30}$
$Z^{T.31}$
$Z^{T.32}$
$Z^{T.33}$
$Z^{T.34}$
$Z^{T.35}$
$Z^{T.36}$
$Z^{T.37}$
$Z^{T.38}$
$Z^{T.39}$
$Z^{T.40}$
$Z^{T.41}$
$Z^{T.42}$
$Z^{T.43}$
$Z^{T.44}$
$Z^{T.45}$
$Z^{T.46}$

DATE: 08/18/90 | NAME: MAG | VERSION: INK.5

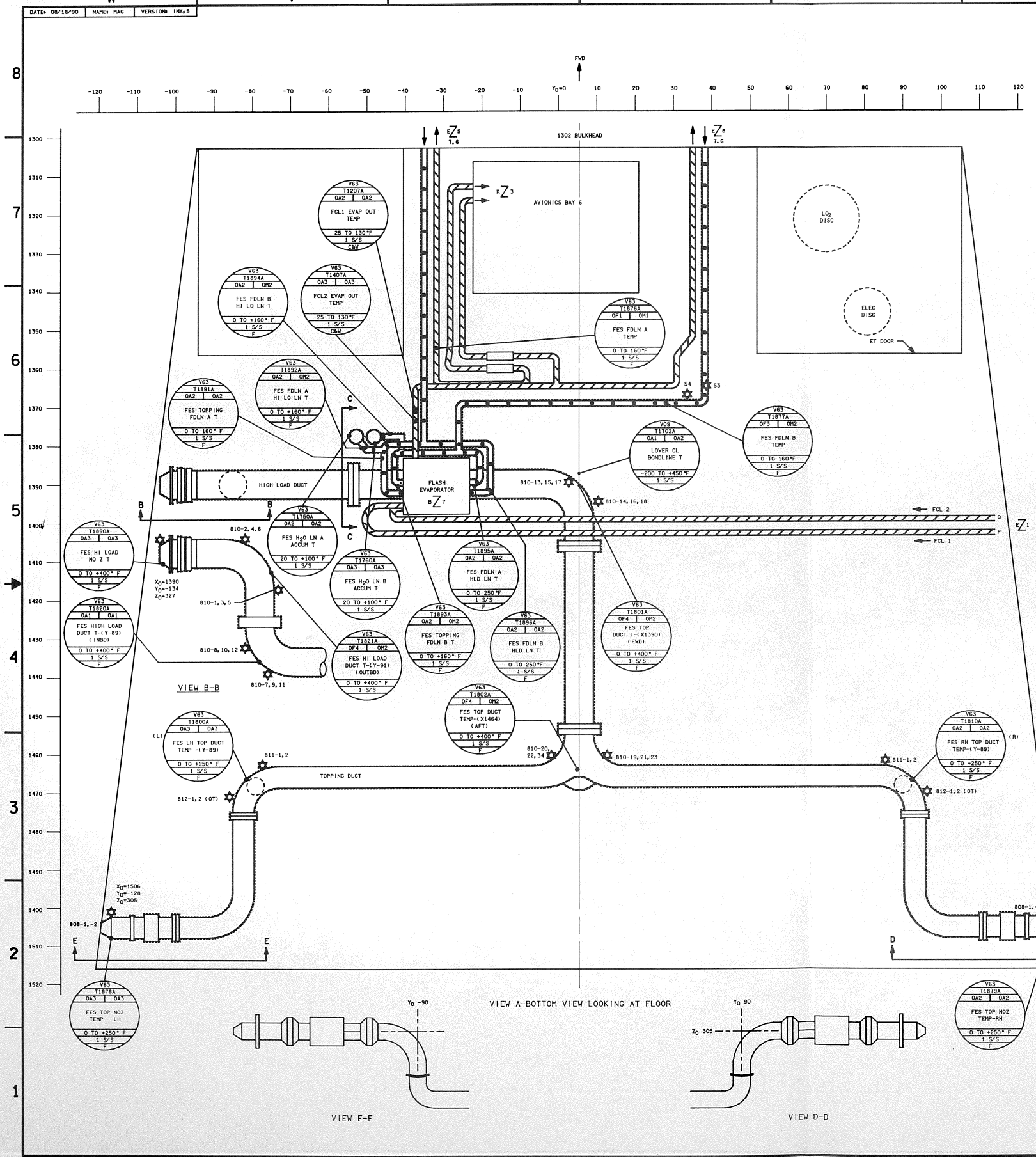

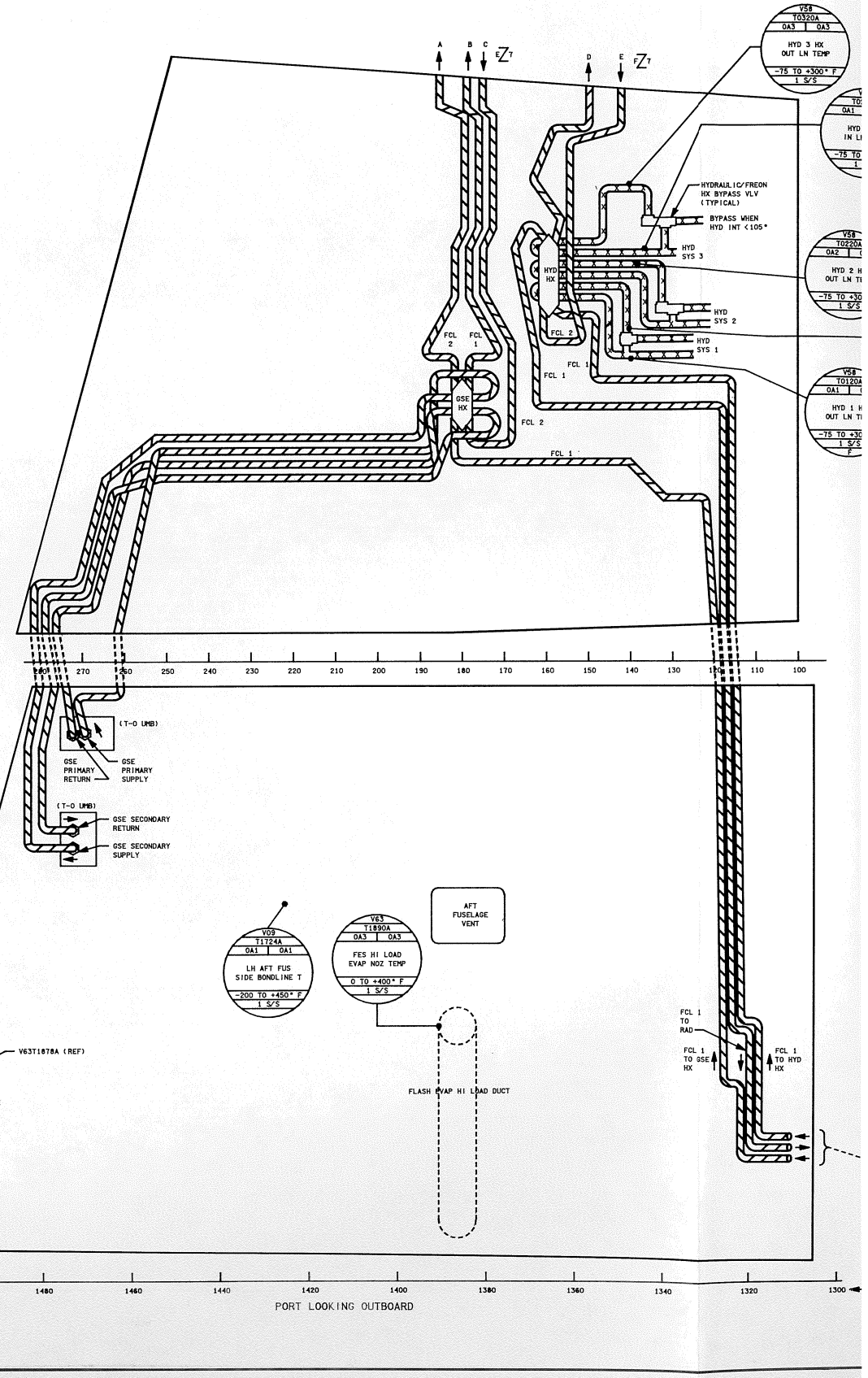

BASIC REV E

DATE▸ 7/27/87	NAME▸ MAG	VERSION▸ INK▸ 2
DATE▸ 8/5/87	NAME▸ BJT	VERSION▸ INK▸ 3
DATE▸ 8/18/90	NAME▸ VSH	VERSION▸ INK▸ 4

ME HE SYS 3 TANK
FCL 2 FROM RADIATOR
FCL 2 TO HYDRAULIC HX
LO_2 TANK NO 3
LO_2 TANK NO 4
FCL 2 FROM AFT COLDPLATES
SEC FLASH EVAP FEEDWATER
FCL 2 FROM FLASH EVAP
V58 T0192A HYD SYS 1 RMG BV RTN LINE T -75 TO +300° F 1 S/S
V41 T1152A CME HE TK PROBE T -325 TO +300° F 1 S/S
V34 T1108A BOND LINE T X1215 Z355 -200 TO +450° F 1 S/S
V63 T1409A FCL 2 RAD PANEL IN TEMP 0 TO 160° F 1 S/S
V63 T1408A FCL 2 CNTLR OUT TEMP 25 TO 130° F 1 S/S F
FCL 2 TO RADIATOR
FCL 2 FROM RADIATOR
RADIATOR FLOW CONTROL PANEL
FCL 2 FROM HYDRAULIC HX
FCL 2 TO GSE HX
V58 T0193A HYD SYS 3 RMG BK RTN LINE T FUS -75 TO +300° F 1 S/S
FCL 2 FROM FLASH EVAP
SEC FLASH EVAP FEEDWATER
V63 T1410A FCL 2 RAD OUT TEMP -200 TO 450° F 1 S/S
V58 T0296A HYD SYS 2 RMG BK RTN LINE T FUS -75 TO +300° F 1 S/S
TO MLG
V58 T0129A HYD SYS 1 RMG EXT LINE T FUS -75 TO +300° F 1 S/S
V63 T1874A FES H_2O LINE A TEMP X1058 0 TO 160° F 1 S/S F
V41 T1352A R ME HE TK PROBE T -325 TO +300° F 1 S/S
FCL 1 TO HYDRAULIC HX
PRI FLASH EVAP FEEDLINE
FCL 1 FROM AFT COLD PLATE
FCL 1 FROM FLASH EVAP
RETRACT
EXTEND
FCL 1 FROM RADIATOR
ME HE SYS 3 TANKS
V34 T1112A BONDLINE T LOWER CL X1215 -200 TO +450° F 1 S/S
FCL 1 TO HYDRAULIC HX
PRI FLASH EVAP FEEDLINE
FCL 1 FROM AFT COLDPLATE
FCL 2 FROM AFT COLDPLATES
FCL 1 FROM FLASH EVAP
V58 T0392A HYD SYS 3 LMG BK PNT LINE T FUS -75 TO +300° F 1 S/S
V63 T1209A FCL 1 RAD IN TEMP 0 TO 160° F 1 S/S
FCL FROM HYDRAULIC HX
FCL 1 TO GSE HX
V63 T1208A FCL 1 CNTLR OUT TEMP 25 TO 130° F 1 S/S F
FCL 1 TO RADIATOR
FCL 1 FROM RADIATOR
RADIATOR FLOW CONTROL PANEL
ME HE SYS 2 TANKS
V41 T1252A L ME HE TK PROBE T -325 TO +300° F 1 S/S
V58 T0292A HYD SYS 2 LMG BK PNT LINE T FUS -75 TO +300° F 1 S/S
V63 T1210A FCL 1 RAD PANEL OUT TEMP -200 TO +450° F 1 S/S
V34 T1106A BOND LINE T X1205 Z355 -200 TO +450° F 1 S/S
V58 T0143A D SYS 1 LG EXT HE X1020 O +300° F 1 S/S F
1040 FRAME
1090.33 FRAME
1145.67 FRAME
1191 FRAME
1249 FRAME
1307 BULKHEAD

VIEW R-R
(FORWARD SIDE OF 1307 BULKHEAD LOOKING AFT)

RGA 2
RGA 1
RGA 4
RGA 3
(UNDER INSUL)
FCL 1 TO GSE HX
FCL 1 FROM HYD HX
FCL 1 TO HYD HX
FCL 1 FROM C/P'S
FCL 2 FROM C/P'S
GH_2 (GSE SUPPLY)
Z_O 275 Z_O 285 Z_O 295

Z_O 275 Z_O 285 Z_O 295
FCL 2 FROM HYD HX
FCL 2 TO HYD HX
FCL 2 TO GSE HX
GO_2 (GSE SUPPLY)
FCL 2 TO PUMP FROM FLASH EVAP
SEC FLASH EVAP FEEDWATER

VIEW M-M
PORT SIDE LOOKING OUTBOARD AT Y_O 95

FREON FLEX STORAGE AND RETRACTION MECHANISM
MID-BODY UMBILICAL PANEL
O_2
H_2

VIEW N-N
STBD SIDE (LOOKING OUTBD)

VIEW H-H
(O_2 OVBD PURGE VENT PORT SIDE LOOKING FWD X +640)

V34 T1102A BOND LINE TEMP X650 Y-105 -200 TO +450° F 1 S/S
V58 T0600A FC O_2 PURGE LINE TEMP 0 TO 400° F 1 S/S F

VIEW J-J
(LOOKING FORWARD AT 693 FRAME STARBOARD SIDE)

FUEL CELL HEAT EXCHANGE
LOOP NO 1
LOOP NO 2

VIEW L-L
(LOOKING OUTBOARD AT Y_O TO)

NJCA NO 2
MCA NO 1
CRYO HTR NO 2
SERVO FEEDBK (PROV)
CRYO HTR NO 4
MCA NO 2
D B I A
OSC NO 2
NJCA NO 1
MCA NO 3
CRYO HTR NO 1
QMS KIT (PROV)
MDM NO 1
MCA NO 4
CRYO HTR NO 3
DSC NO 1

VIEW K-K
(LOOKING INBOARD AT Y_O -92)

VIEW P-P
PORT SIDE LOOKING OUTBOARD (TO/FROM LEFTMAIN LANDING GEAR UPLOCK ACT AND BRK VLVS)

VIEW Q-Q
STBD SIDE LOOKING OUTBOARD (TO/FROM RIGHT MAIN LANDING GEAR UPLOCK ACT AND BRK VLVS)

NOTES
1. PIPING LEGEND
   - HEATER AND INSULATED THERMOSTAT (TYP)
   - FREON
   - H_2O
   - H_2/H_2O
   - H_2
   - O_2
   - FC 40
   - WASTE WATER
   - HYDRAULIC
2. HEATER LEGEND
3. HEATER WATTAGES ARE BASED ON 28.0 VDC
4. TUBE ROUTING APPROXIMATE
5. MAY BE FREON OR H_2O DEPENDING ON VEHICLE

*6 TCS MFI

SIGNATURE		DATE	NATIONAL AERONAUTICS AND SPACE ADMINISTRATION LYNDON B. JOHNSON SPACE CENTER HOUSTON, TEXAS
DSGN	VIC ORTIZ	6-6-83	
DR			TCS=INSTRUMENTATION MID FUSELAGE
ENGR	L. RICHE	8/17/90	
ENGR			
APP			
APP			SPACE SHUTTLE / DMC NO 7.6
OMNIPLAN	S.C. Rinehart	8-17-9	ALL
LTR E	PCN		126.5 X 34 / PAGE / SHEET 1 OF 1

BASIC REV E

VIEW H-H

VIEW G-G

VIEW F-F

VIEW E-E

VIEW D-D

VIEW C-C

VIEW

LOOP NO 1 FROM FLASH EVAPORATOR

LOOP NO 2 FROM FLASH EVAPORATOR

LOOP NO 1 TO PUMP

LOOP NO 2 TO PUMP

LOOP NO 1 PROPORTIONING VLV

LOOP NO 2 PROPORTIONING VLV

LOOP NO 1 FLOW SENSOR

LOOP NO 2 FLOW SENSOR

LOOP NO 1 TO INTERCHANGER

LOOP NO 2 TO INTERCHANGER

INTERCHANGER

EXCHANGER

PAYLOAD HEAT EXCHANGER

HEATER

FROM F/C NO 1

FROM F/C NO 2

FROM F/C NO 3

TO CM

VACUUM VENT LINE

DUMP VALVES

POTABLE H2O DUMP LINE

WASTE H2O DUMP LINE

FUEL CELL H2O RELIEF VLV PNL

LOOP FROM COOLANT

LOOP SERVICE PANEL

TO/FROM COOLANT

SYS 1 N2 TANK 1

SYS 2 N2 TANK 2

TO O2 VENT

TO O2 RELIEF VENT

TO H2 RELIEF VENT

H2 RELIEF VENT

H2 PRESS RELIEF PANEL 2

O2 PRESS RELIEF PANEL 2

O2 VALVE PANEL 2

H2 VALVE PANEL 2

O2 PRESS RELIEF PANEL 1

H2 VLV PANEL 1

MCA NO 1

MCA NO 2

MCA NO 3

MCA NO 4

LH2 TANK NO 1

LH2 TANK NO 2

LH2 TANK NO 3

LH2 TANK NO 4

LO2 TANK NO 1

LO2 TANK NO 2

FILL

VENT

SUPPLY

EXTEND

RETRACT

FCL 1 FROM RADIATOR

FCL 2 FROM RADIATOR

FCL 1 FROM FLASH EVAP

FCL 2 FROM FLASH EVAP

FCL 1 FROM AFT COLDPLATES

FCL 2 FROM AFT COLDPLATES

SEC FLASH EVAP FEEDWATER

PRI FLASH EVAP FEEDLINE

FCL 1 TO HYDRAULIC HX

FCL 2 TO HYDRAULIC HX

HYDRAULIC HX

HE SYS 3 TANK

FCL 1 FROM HYDRAULIC HX

FCL 2 FROM HYDRAULIC HX

FCL TO HYDRAULIC HX

FCL 1 GLY IN

FCL 2 GLY IN

FCL 1 GLY OUT

FCL 2 GLY OUT

EMERG O2 TANK

EMERG O2 TANK HTR

SYS 2 N2 TANK HTR

SYS 1 N2 SUPPLY HTR

SYS 2 N2 SUPPLY HTR

SUPPLY LN

VENT LN

FILL LN

CWD HTR

CWD HTR (MISSION KIT)

LWR BL T

UPR BL T

NOZZLE

BARREL

LINE

RELIEF

VALVES

SEE F-40

SEE F-41

SEE F-42

SEE F-43

SEE F-44

SEE F-45

SEE F-46

SEE F-47

SEE F-48

SEE F-49

SEE F-50

SEE F-51

SEE F-52

SEE F-53

SEE F-54

SEE F-55

SEE F-56

SEE F-57

SEE F-58

SEE F-59

SEE

DATE: 8/18/90 | NAME: VSH | VERSION: INK4

VIEW A-A
(LOOKING FORWARD AT 576 BULKHEAD AND 582 FRAME)

VIEW B-B
FUEL CELL-STBD SIDE

FUEL CELL-PORT SIDE

FUEL CELL-END VIEW

VIEW C-C
(LOOKING FWD AT X =610)

VIEW D-D
(LOOKING OUTBD ON PORT SIDE POTABLE AND WASTE WATER DUMP AND VACUUM VENT)

VIEW E-E
(LOOKING AFT AT 636 FRAME STARBOARD SIDE)

VIEW
(LOOKING AFT AT 63

BASIC REV E

DATE: 05/25/90	NAME: BJT	VERSION: BPT; 8
DATE: 07/26/90	NAME: LAM	VERSION: BPT; 9
DATE: 08/18/90	NAME: MAG	VERSION: INK; 1

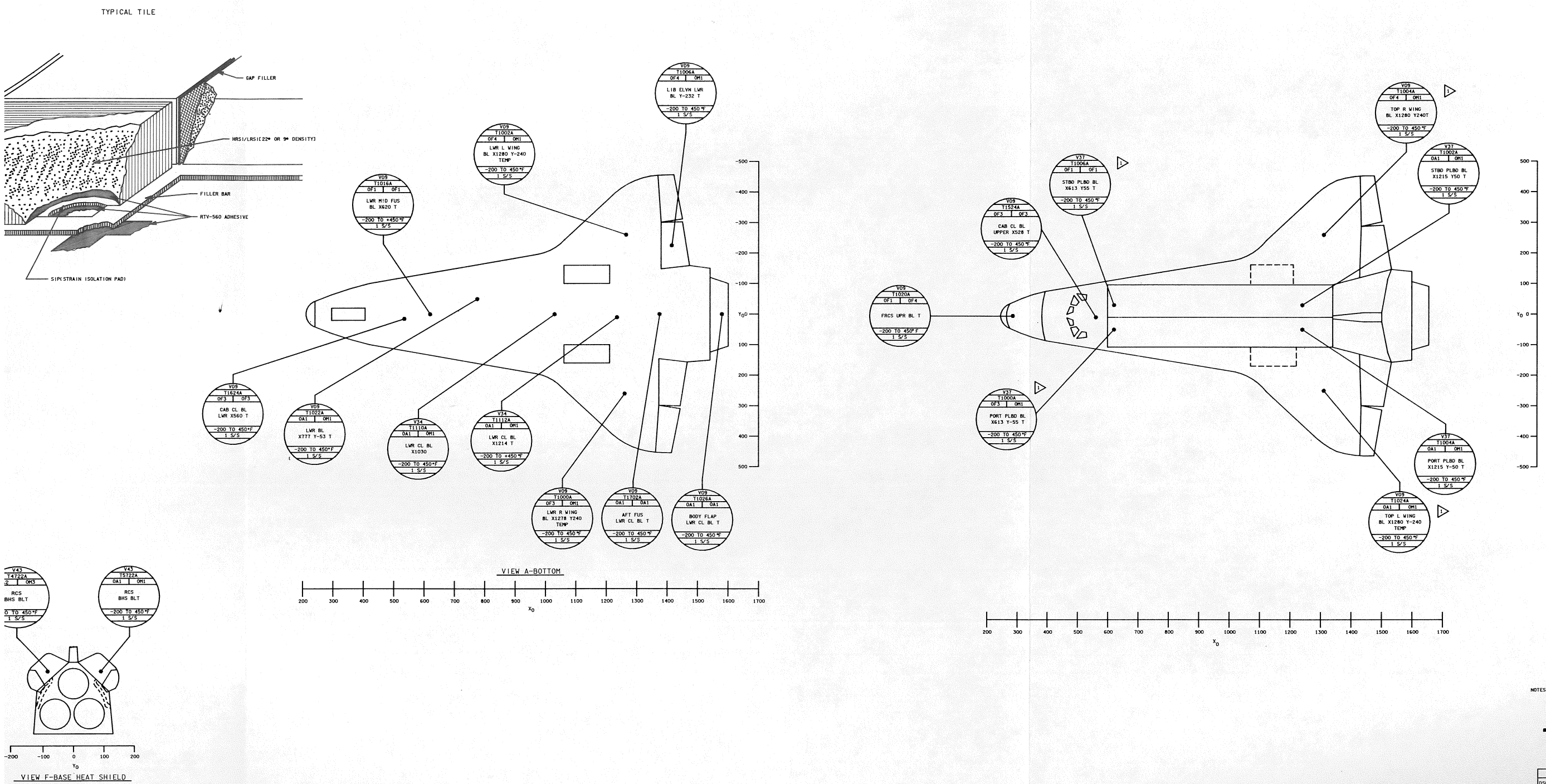

2. FOR VENDOR DRAWING REFERENCES SEE TABLE 7-1

NOTES: 1 NOT ON OV102

7 TPS INST

SIGNATURE	DATE	NATIONAL AERONAUTICS AND SPACE ADMINISTRATION LYNDON B. JOHNSON SPACE CENTER HOUSTON, TEXAS
DSGN JAMES BLANCHARD	8-9-82	
DR		TPS/STRUCTURE INSTRUMENTATION
ENGR J.M. SOLOMON	8/17/90	
ENGR [signature]	8/24/90	
APP [signature]	8/20/90	
APP		SPACE SHUTTLE ALL
OMNIPLAN S.E. Kimbrell	10-19-90	DWG NO 7.7
LTR E	PCN	126.5 X 34 PAGE SHEET 1 OF 1

BASIC REV E

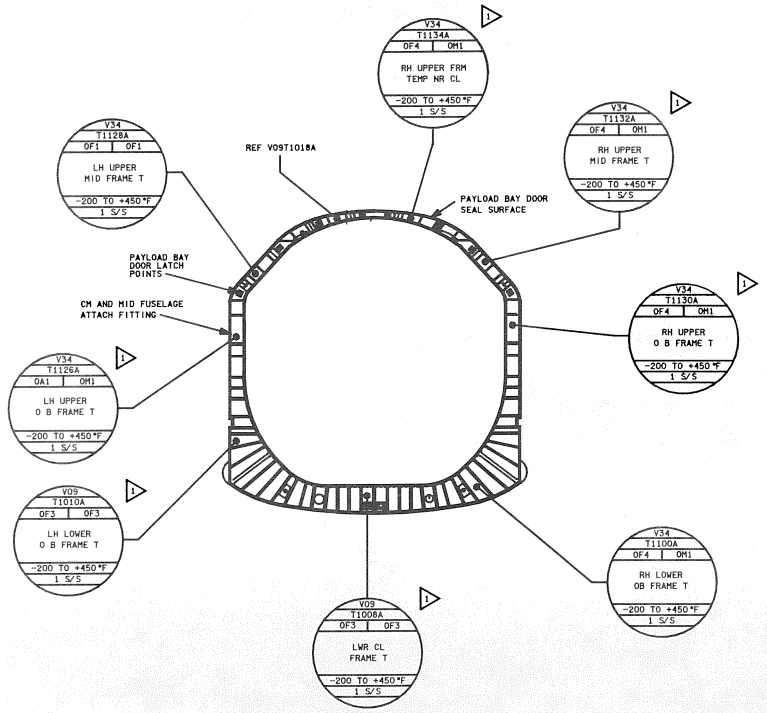

FRAME 582 LOOKING FORWARD SECTION J-J

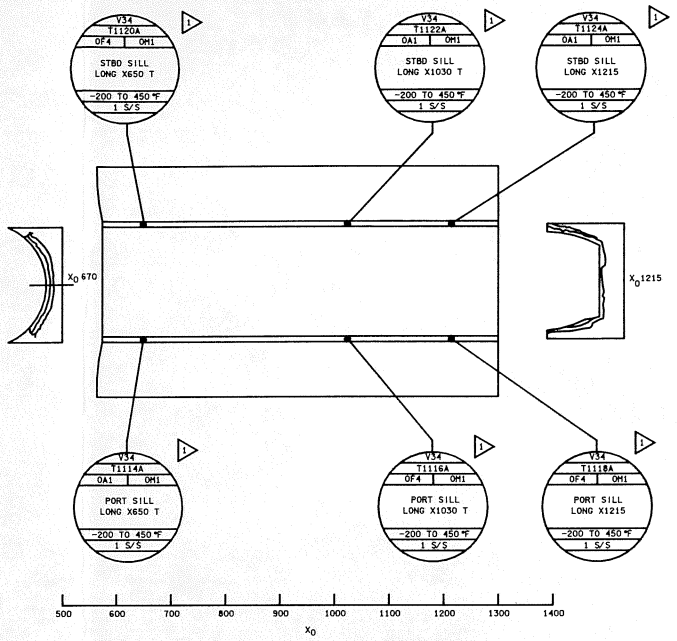

VIEW D-LOOKING DOWN INTO PAYLOAD BAY, DOORS OPEN

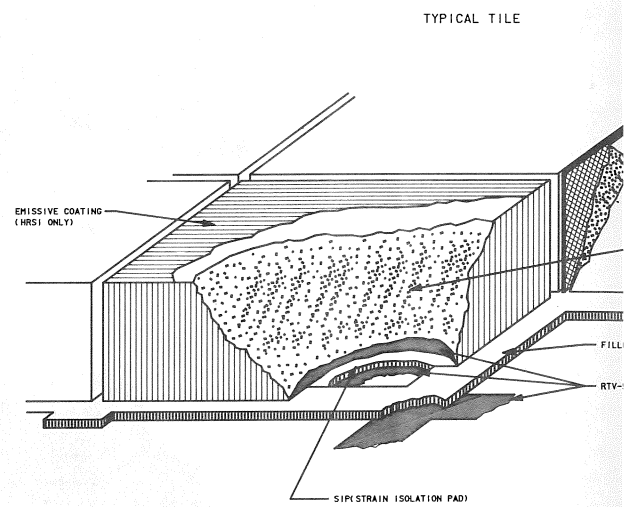

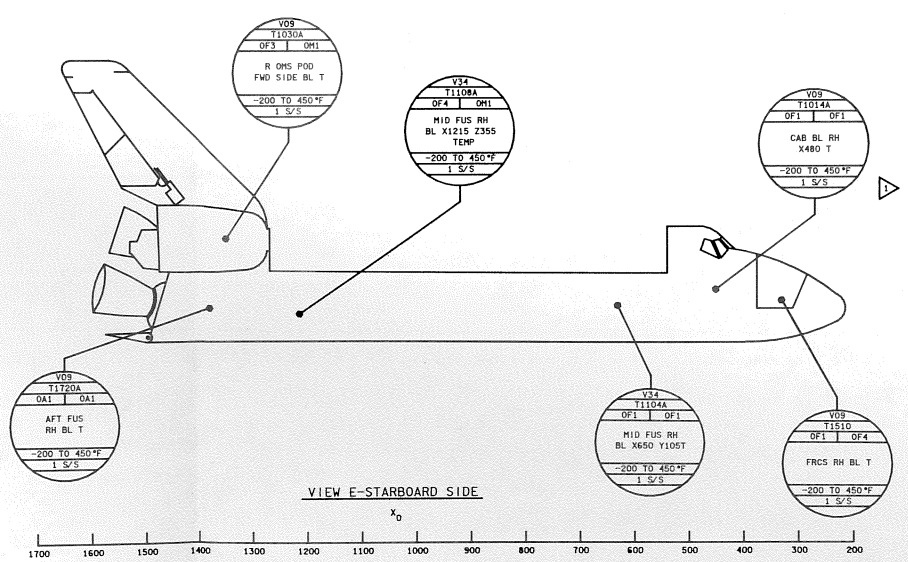

VIEW E-STARBOARD SIDE

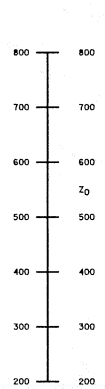

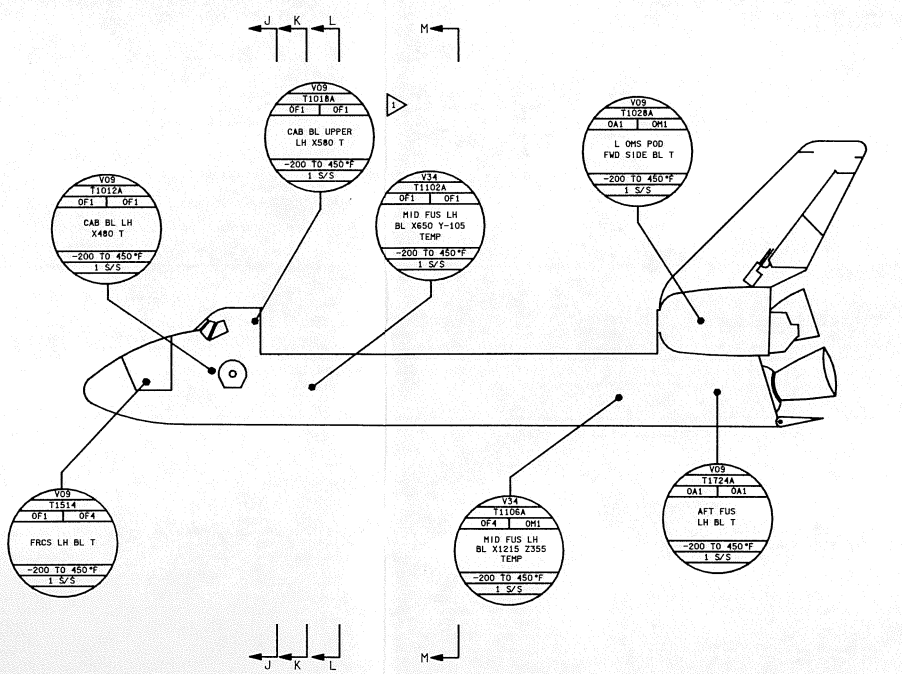

VIEW C-PORT SIDE

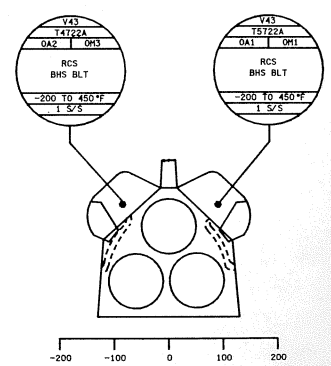

VIEW F-BASE HEAT SHIELD

DATE: 08/18/90 | NAME: MAG | VERSION: INK.1

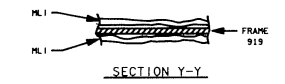

SECTION Y-Y

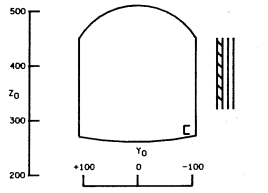

VIEW N-1307 BLKHD LOOKING AFT

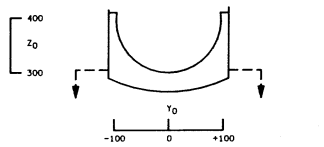

SECTION M-M 919 FRAME LOOKING FWD

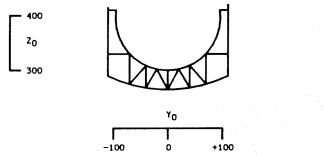

SECTION L-L 693 FRAME LOOKING FWD

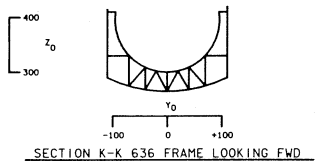

SECTION K-K 636 FRAME LOOKING FWD

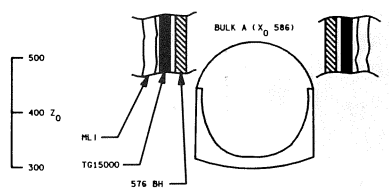

SECTION J-J X_0 582 LOOKING FORWARD

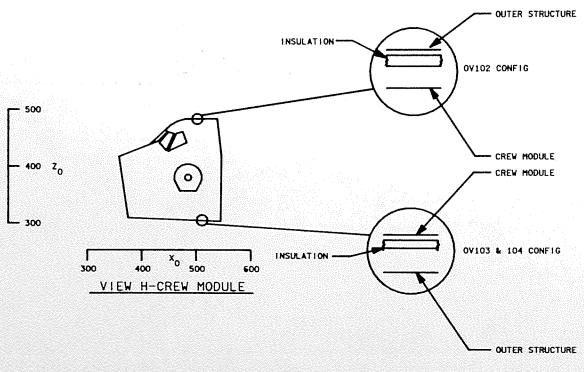

VIEW H-CREW MODULE

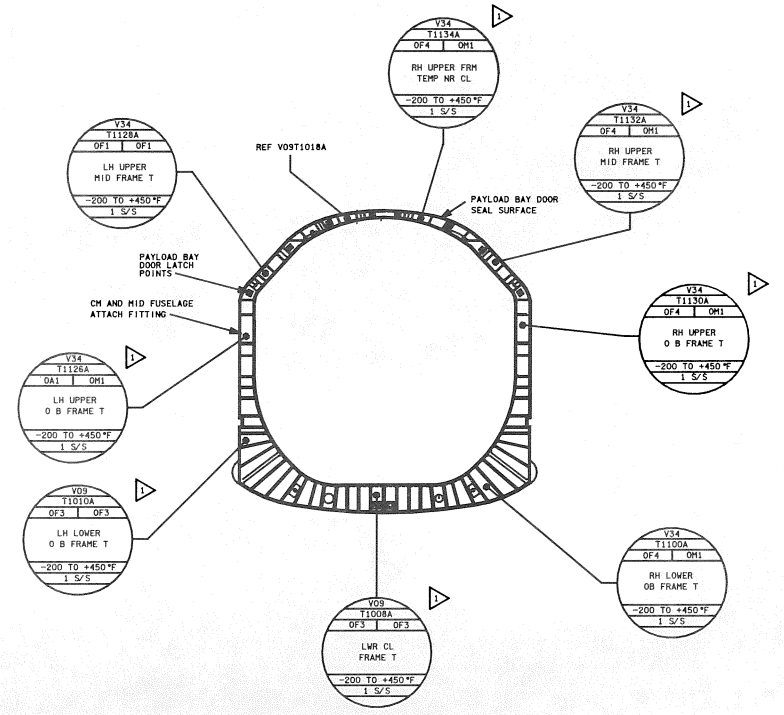

FRAME 582 LOOKING FORWARD SECTION J-J

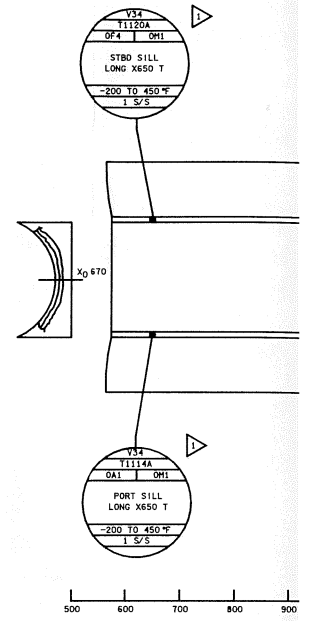

VIEW D-LOOKING DOWN IN

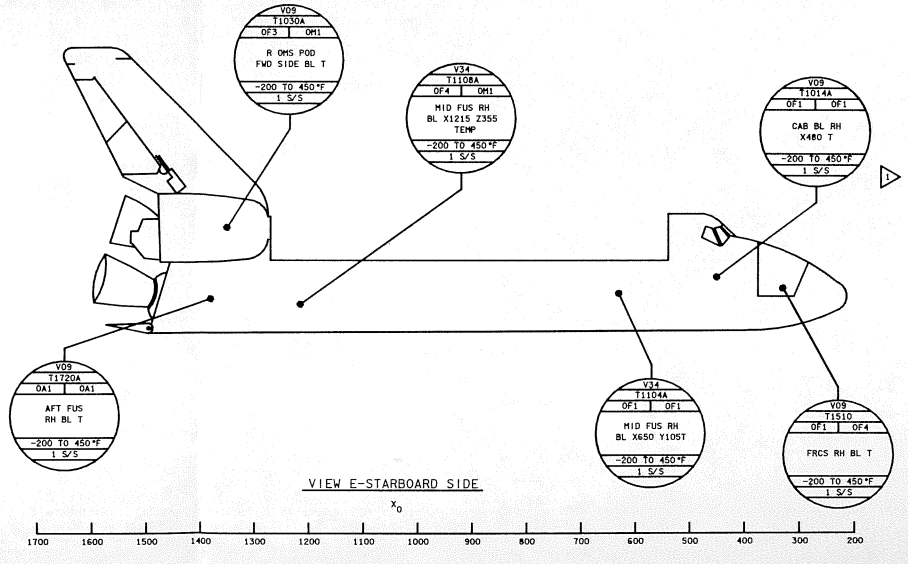

VIEW E-STARBOARD SIDE

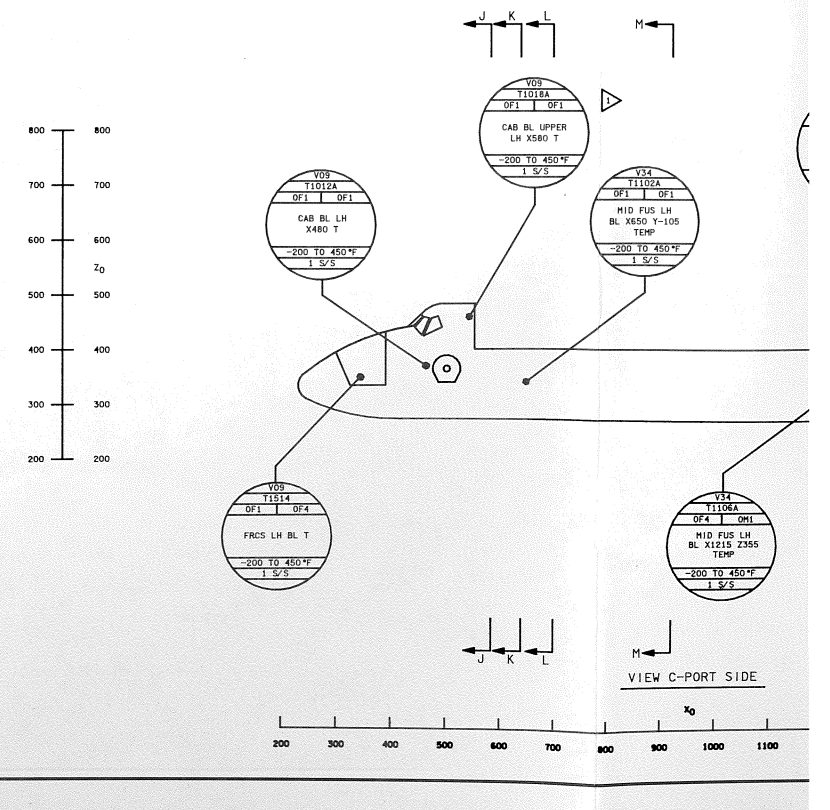

VIEW C-PORT SIDE

BASIC REV E

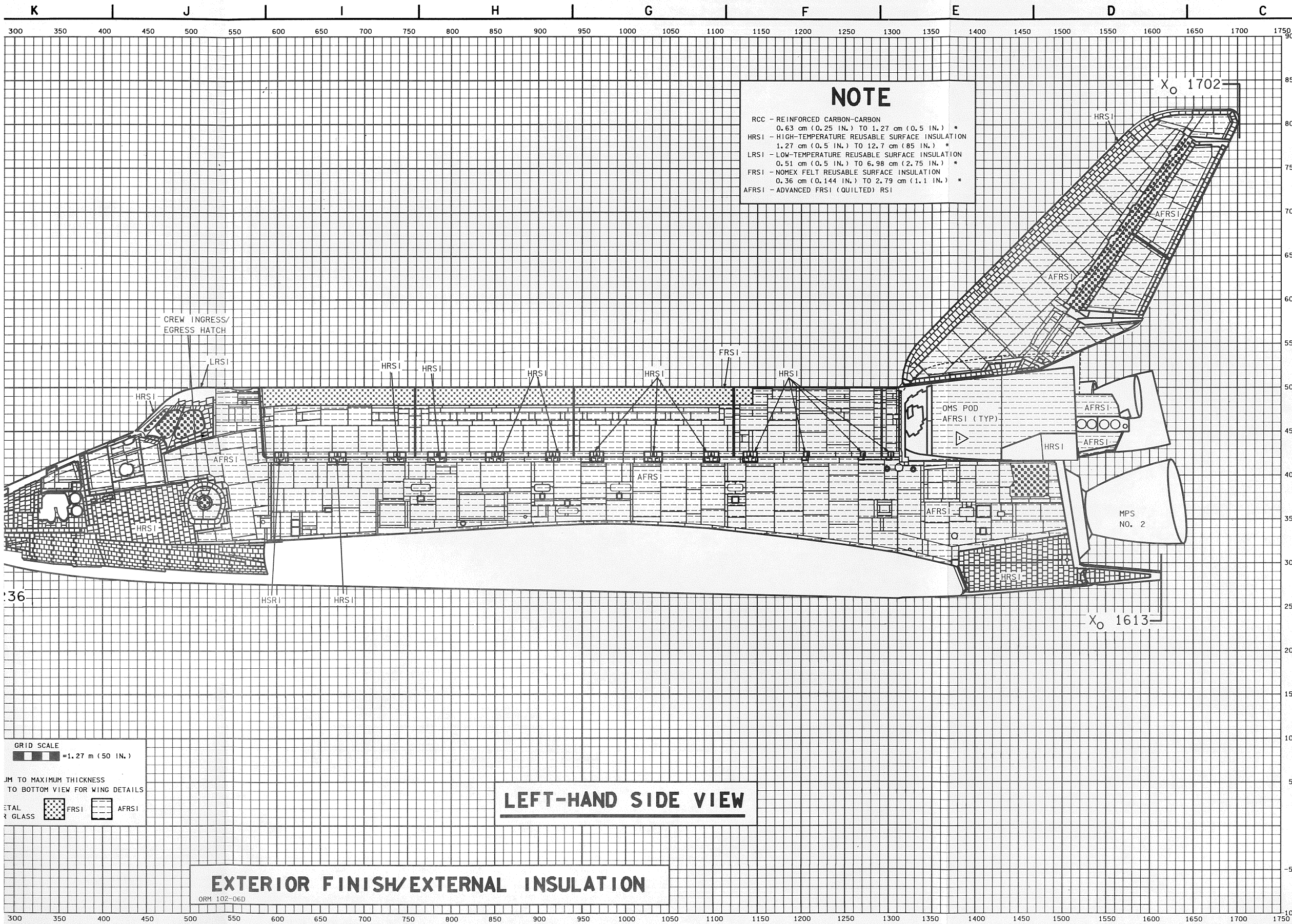

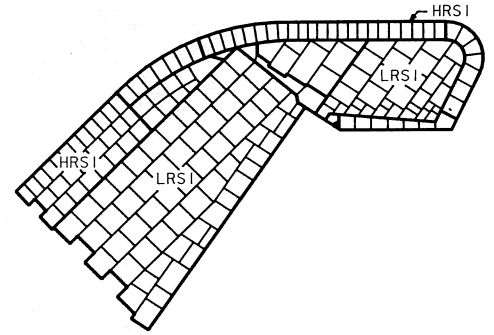

OV-102 VERTICAL STABILIZER

3. OV-103/104 TPS CONFIGURATION. OV-102 WILL BE MODIFIED TO THIS CONFIGURATION EXCEPT FOR INSTRUMENTATION TILES

2. REFER TO TABLE 7-1 FOR DRAWING REFERENCES

NOTES: 1 SEE 7.8 SHEET 3 FOR OMS POD TPS DETAILS

*8 EXT SIDES

SIGNATURE	DATE	NATIONAL AERONAUTICS AND SPACE ADMINISTRATION LYNDON B. JOHNSON SPACE CENTER HOUSTON, TEXAS
DSGN MIKE BECKER	10/14/81	
DR MICHAEL MURPHY		EXTERNAL SIDE VIEWS
ENGR K. TURNER	8/17/90	
ENGR K. Turner	8/31/90	
APP Mark J. Fenning	9/4/90	
APP		SPACE SHUTTLE ALL
OMNIPLAN S. K. Kimbrell	10-16-90	DWG NO 7.8
LTR E	PCN	126.5 X 34 PAGE SHEET 1 OF 4

BASIC REV E

DATE: 7/18/89	NAME: JMB	VERSION: INK2
DATE: 7/21/89	NAME: SEW	VERSION: INK3
DATE: 8/17/90	NAME: VSH	VERSION: INK4

S R Q P O N M L K J I

1150 1100 1050 1000 950 900 850 800 750 700 650 600 550 500 450 400 350 300 250 200

900 850 800 750 700 650 600 550 500 450 400 350 300 250 200 150 100 50 0 -50 -100

5 IN.) *
INSULATION
IN.) *
INSULATION
5 IN.) *
ATION
.1 IN.) *

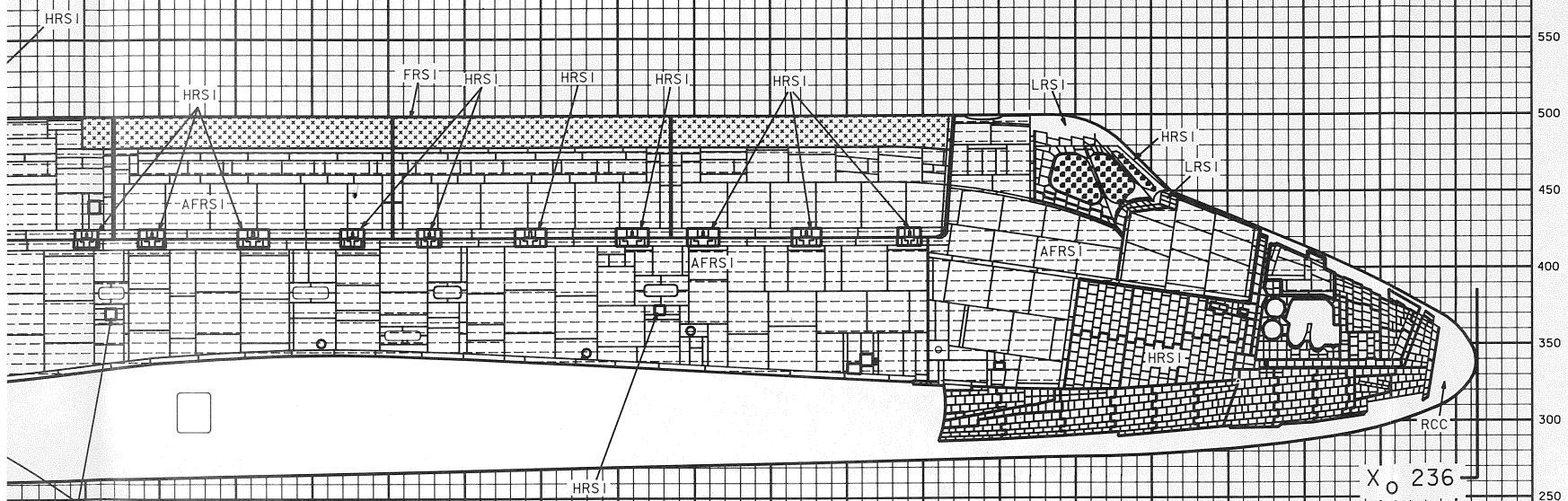

*MINIMUM TO MAXIMUM THICKNESS
**REFER TO BOTTOM VIEW FOR WING DETAILS.
METAL OR GLASS | FRSI | AFRSI

RIGHT-HAND SIDE VIEW

EXTERNAL INSULATION

ORM-102-101

200 250 300 350 400 450 500 550 600 650

900 850 800 750 700 650 600 550 500 450 400 350 300 250 200 150 100 50 0 -50 -100

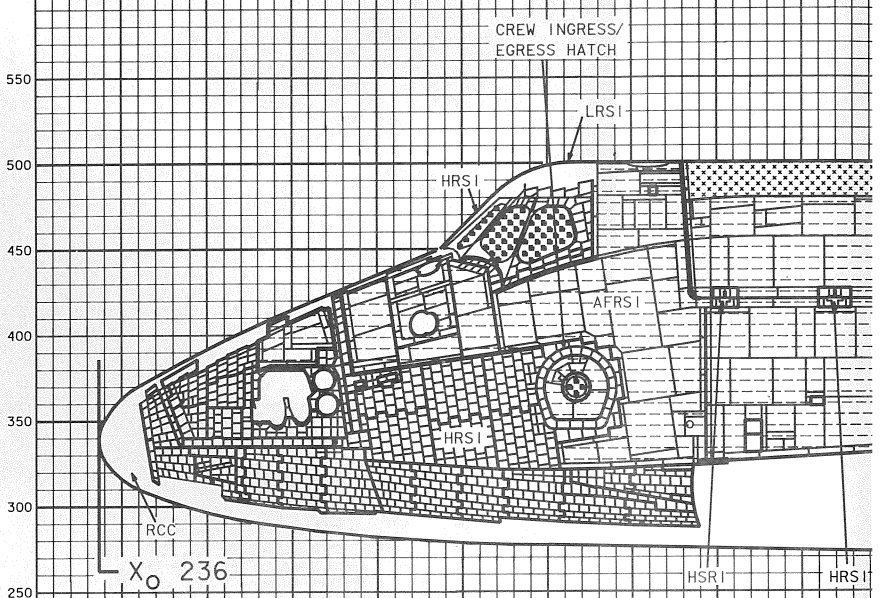

GRID SCALE
=1.27 m (50 IN.)
*MINIMUM TO MAXIMUM THICKNESS
**REFER TO BOTTOM VIEW FOR WING DETAILS
METAL OR GLASS | FRSI | AFRSI

EXTERIOR FIN

ORM 102-06D

DATE: 8/17/90 | NAME: VSH | VERSION: INR4

NOTE

RCC - REINFORCED CARBON-CARBON
0.63 cm (0.25 IN.) TO 1.27 cm (0.5 IN.) *
HRSI - HIGH-TEMPERATURE REUSABLE SURFACE INSULATION
1.27 cm (0.5 IN.) TO 12.7 cm (85 IN.) *
LRSI - LOW-TEMPERATURE REUSABLE SURFACE INSULATION
0.51 cm (0.5 IN.) TO 6.98 cm (2.75 IN.) *
FRSI - NOMEX FELT REUSABLE SURFACE INSULATION
0.36 cm (0.144 IN.) TO 2.79 cm (1.1 IN.) *
AFRSI - ADVANCED FRSI (QUILTED) RSI

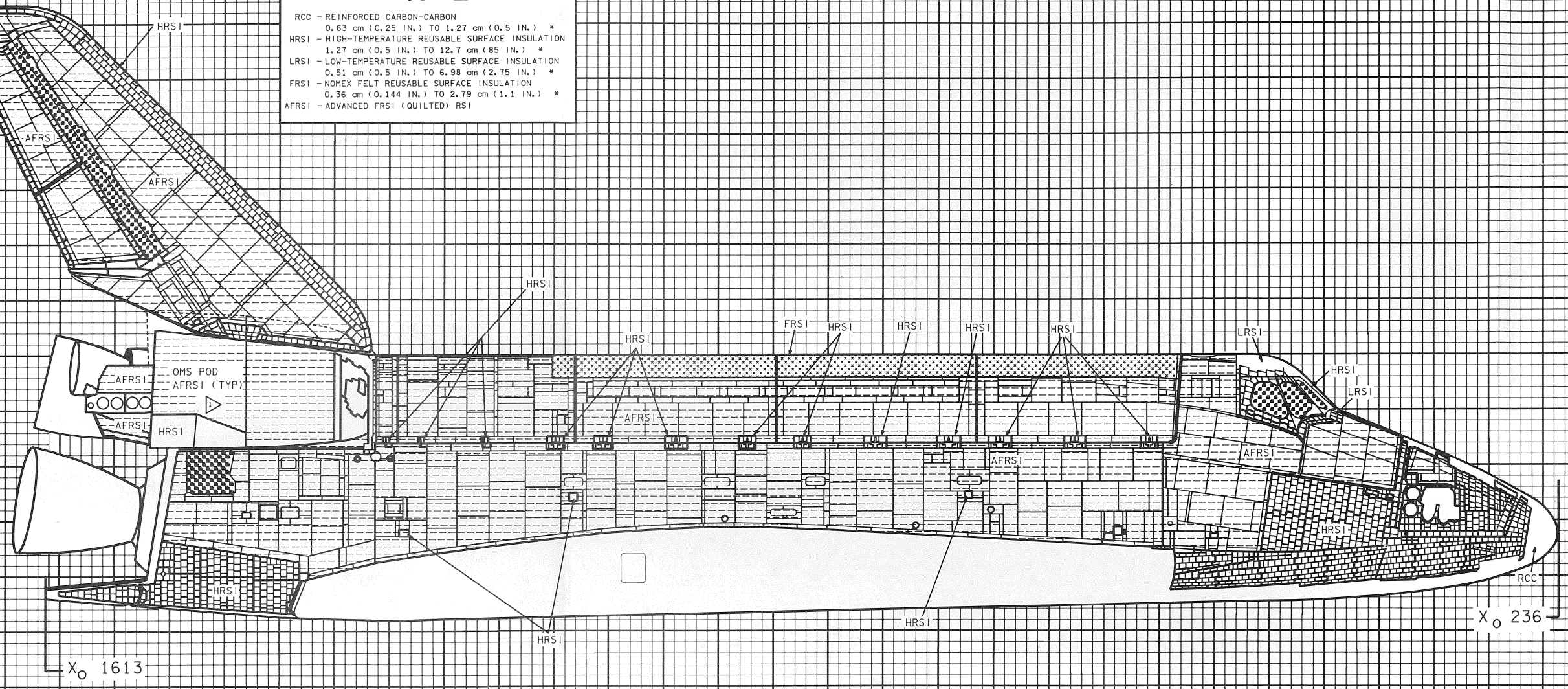

GRID SCALE
=1.27 m(50IN.)

*MINIMUM TO MAXIMUM THICKNESS
**REFER TO BOTTOM VIEW FOR WING DETAILS.
METAL OR GLASS | FRSI | AFRSI

RIGHT-HAND SIDE VIEW

EXTERIOR FINISH/EXTERNAL INSULATION

ORM-102-09D ORM-102-101

BASIC REV E

M L K J I H G F E D C

NOTE

RCC - REINFORCED CARBON-CARBON
0.63 cm (0.25 IN.) TO 1.27 cm (0.5 IN.) *
HRSI - HIGH-TEMPERATURE REUSABLE SURFACE INSULATION
1.27 cm (0.5 IN.) TO 12.7 cm (85 IN.) *
LRSI - LOW-TEMPERATURE REUSABLE SURFACE INSULATION
0.51 cm (0.5 IN.) TO 6.98 cm (2.75 IN.) *
FRSI - NOMEX FELT REUSABLE SURFACE INSULATION
0.36 cm (0.144 IN.) TO 2.79 cm (1.1 IN.) *
AFRSI - ADVANCED FRSI (QUILTED) RSI

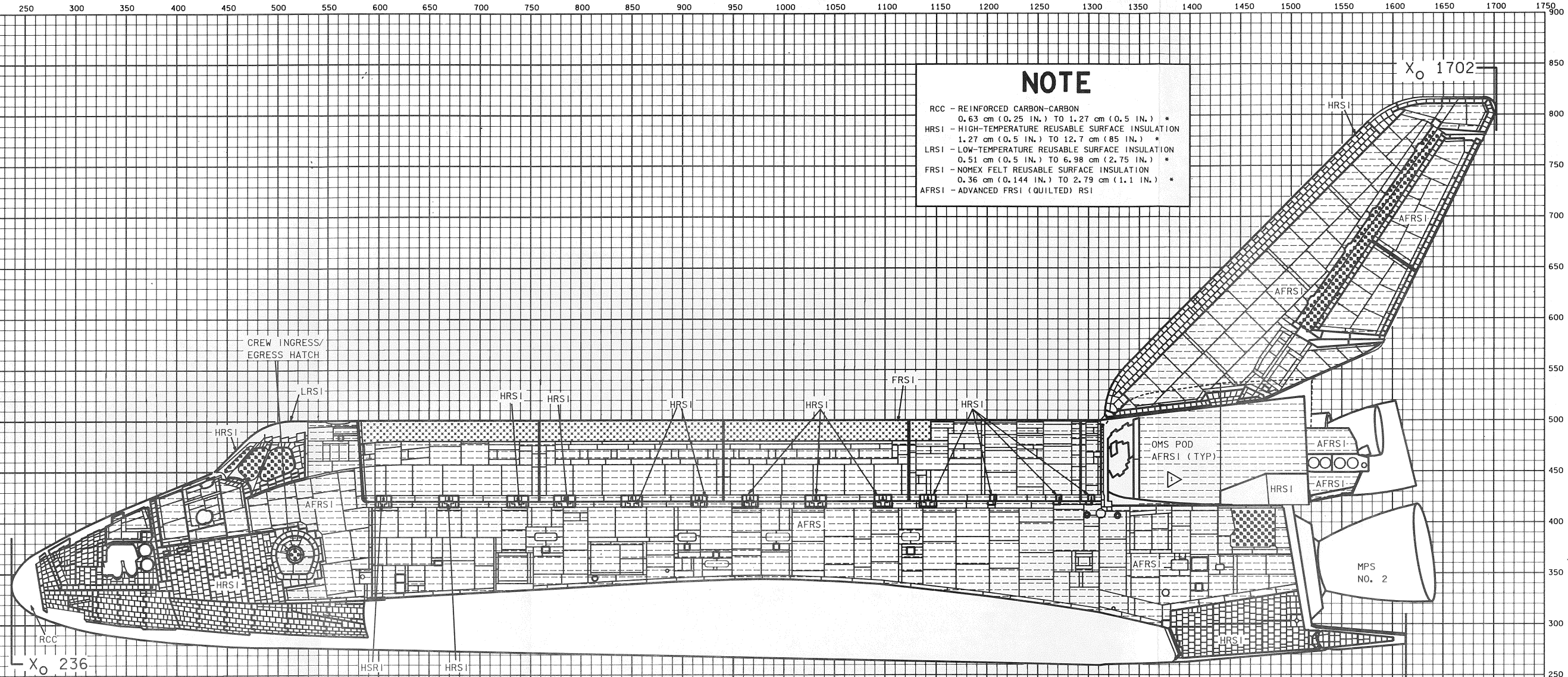

GRID SCALE
=1.27 m (50 IN.)

*MINIMUM TO MAXIMUM THICKNESS
**REFER TO BOTTOM VIEW FOR WING DETAILS

METAL OR GLASS | FRSI | AFRSI

LEFT-HAND SIDE VIEW

EXTERIOR FINISH/EXTERNAL INSULATION

ORM 102-06D

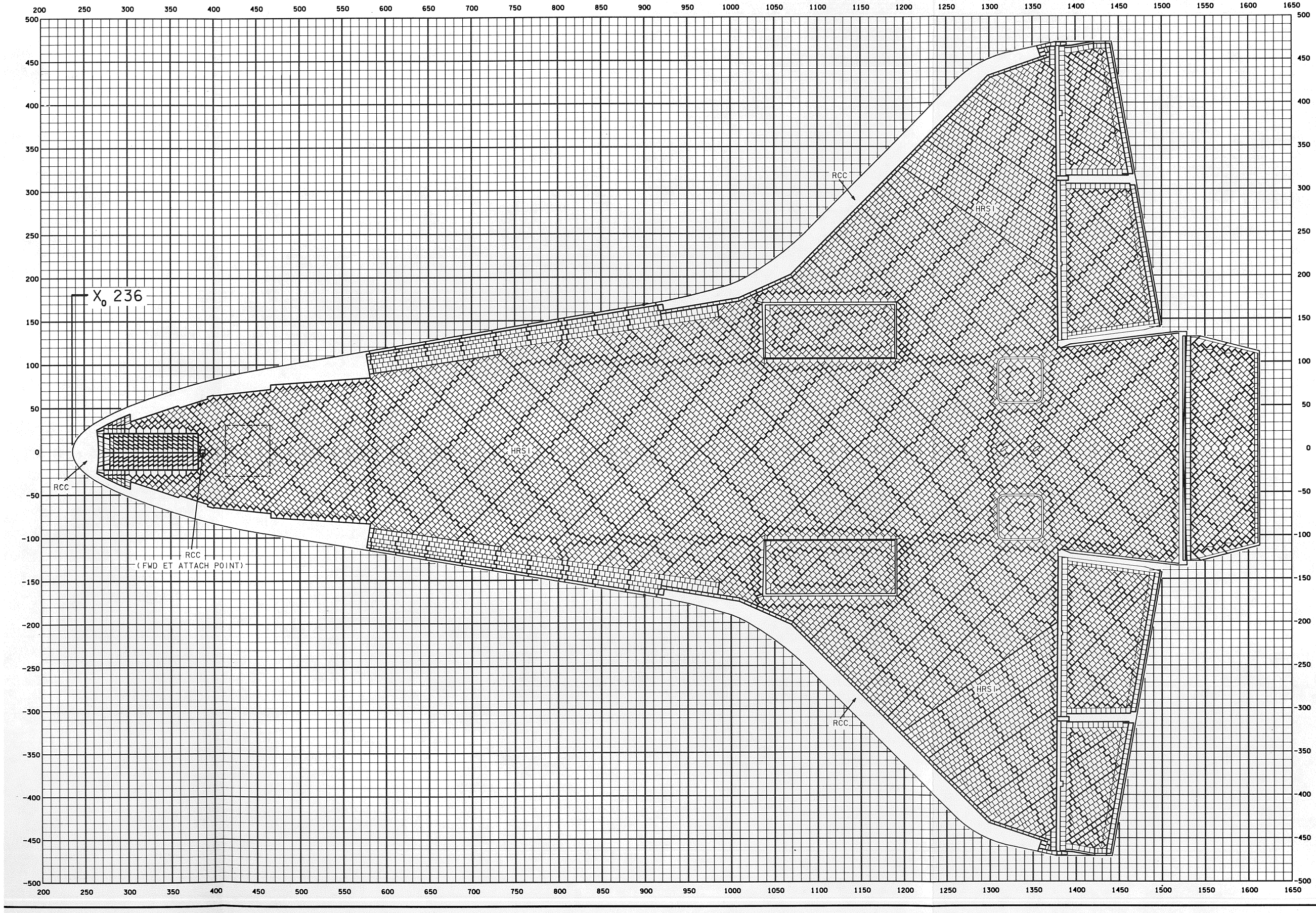

DATE: 11/16/88	NAME: BJT	VERSION: BPT; 5
DATE: 12/21/88	NAME: BCH	VERSION: BPT; 6
DATE: 8/18/90	NAME: YSH	VERSION: INK; 2

3. OV-103/104 TPS CONFIGURATION, OV-102 WILL BE MODIFIED TO THIS, EXCEPT FOR INSTRUMENTATION TILES

2. REFER TO TABLE 7-1 FOR DRAWING REFERENCES

NOTES: 1 SEE DWG 7.8 SHEET 3 FOR OMS POD TPS

*8 TOP/BOTTOM 2

SIGNATURE	DATE	NATIONAL AERONAUTICS AND SPACE ADMINISTRATION LYNDON B. JOHNSON SPACE CENTER HOUSTON, TEXAS
DSGN TOM LENERS	10/16/81	
DR THERESA WISONG		EXTERNAL VIEWS TOP/BOTTOM
ENGR V. HOWARD	8/17/90	
ENGR V. Howard	8/23/90	
APP Mark J. Haig	8/30/90	
APP		SPACE SHUTTLE ALL
OMNIPLAN S.K. Vinbrice	10-16-90	DWG NO 7.8
LTR E	PCN	126.5 X 34
		PAGE SHEET 2 OF 4

BASIC REV E

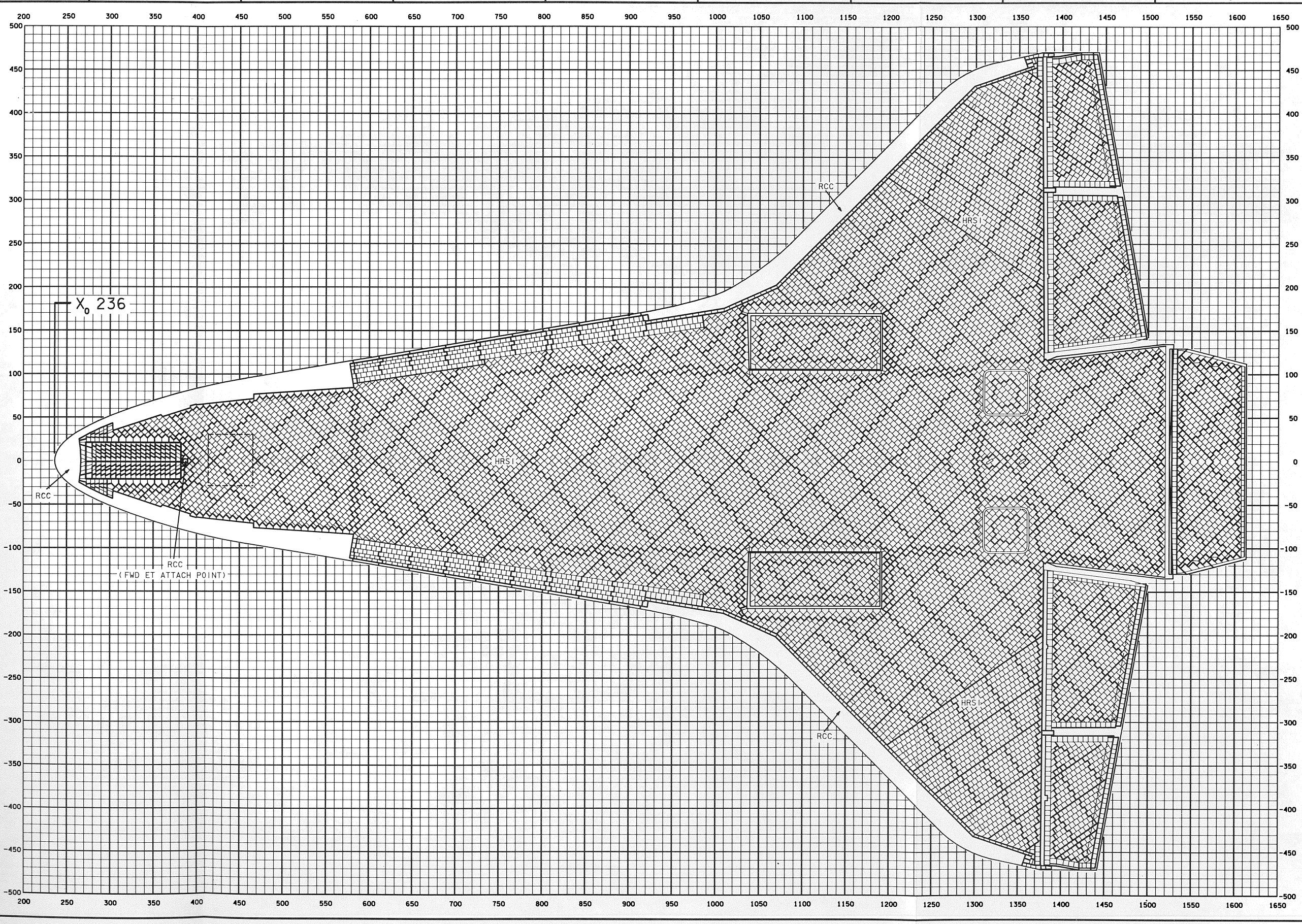

DATE: 11/16/88	NAME: BJT	VERSION: BPT; 5
DATE: 12/21/88	NAME: BCH	VERSION: BPT; 6
DATE: 8/18/90	NAME: VSH	VERSION: INK; 2

3. OV-103/104 TPS CONFIGURATION, OV-102 WILL BE MODIFIED TO THIS, EXCEPT FOR INSTRUMENTATION TILES

2. REFER TO TABLE 7-1 FOR DRAWING REFERENCES

NOTES: 1 SEE DWG 7.8 SHEET 3 FOR OMS POD TPS

*8 TOP/BOTTOM 2

SIGNATURE	DATE	NATIONAL AERONAUTICS AND SPACE ADMINISTRATION LYNDON B. JOHNSON SPACE CENTER HOUSTON, TEXAS
DSGN TOM LENERS	10/16/89	
DR THERESA WISONG		EXTERNAL VIEWS TOP/BOTTOM
ENGR V. HOWARD	8/17/90	
ENGR V. Howard	8/23/90	
APP Mark Tracy	8/30/90	
APP		SPACE SHUTTLE ALL
OMNIPLAN S.K. Kimbrell	10-16-90	DWG NO 7.8
LTR E	PCN	126.5 X 34
PAGE		SHEET 2 OF 4

BASIC REV E

S R Q P O N M L K J I

800 850 900 950 1000 1050 1100 1150 1200 1250 1300 1350 1400 1450 1500 1550 1600 1650 1700 1750 1800

500 450 400 350 300 250 200 150 100 50 0 -50 -100 -150 -200 -250 -300 -350 -400 -450 -500

TOP VIEW

HRSI
RCC
AFRSI
AFRSI
FRSI
HRSI
AFRSI
HRSI
X_0 1613
AFRSI
FRSI
AFRSI
AFRSI (TYP)
FRSI
AFRSI
AFRSI
HRSI
PLBD AFRSI (TYP)
HRSI
RCC
AFRSI
AFRSI
AFRSI

TE

ON
) 1.27 cm (0.5 IN.)
ABLE SURFACE INSULATION
12.7 cm (5 IN.)
BLE SURFACE
6.98 cm (2.75 IN.)
URFACE INSULATION
TO 2.79 cm (1.1 IN.)
) RSI

EXTERNAL INSULATION

ORM 102-012C

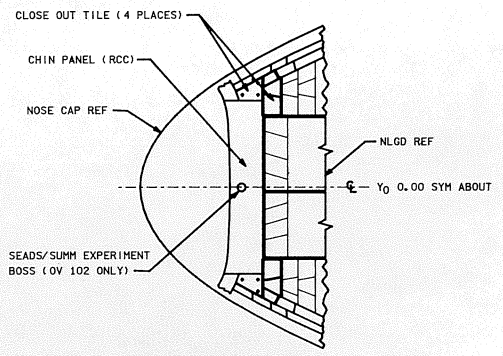

CHIN PANEL INSTALLATION (OV102-104 ONLY)

200 250 300 350 400 450 500 550

500 450 400 350 300 250 200 150 100 50 0 -50 -100 -150 -200 -250 -300 -350 -400 -450 -500

X_0 236
RCC
RCC
(FWD ET ATTACH POINT)

200 250 300 350 400 450 500 550

DATE: 8/18/90 | NAME: VSH | VERSION: INK 2

TOP VIEW

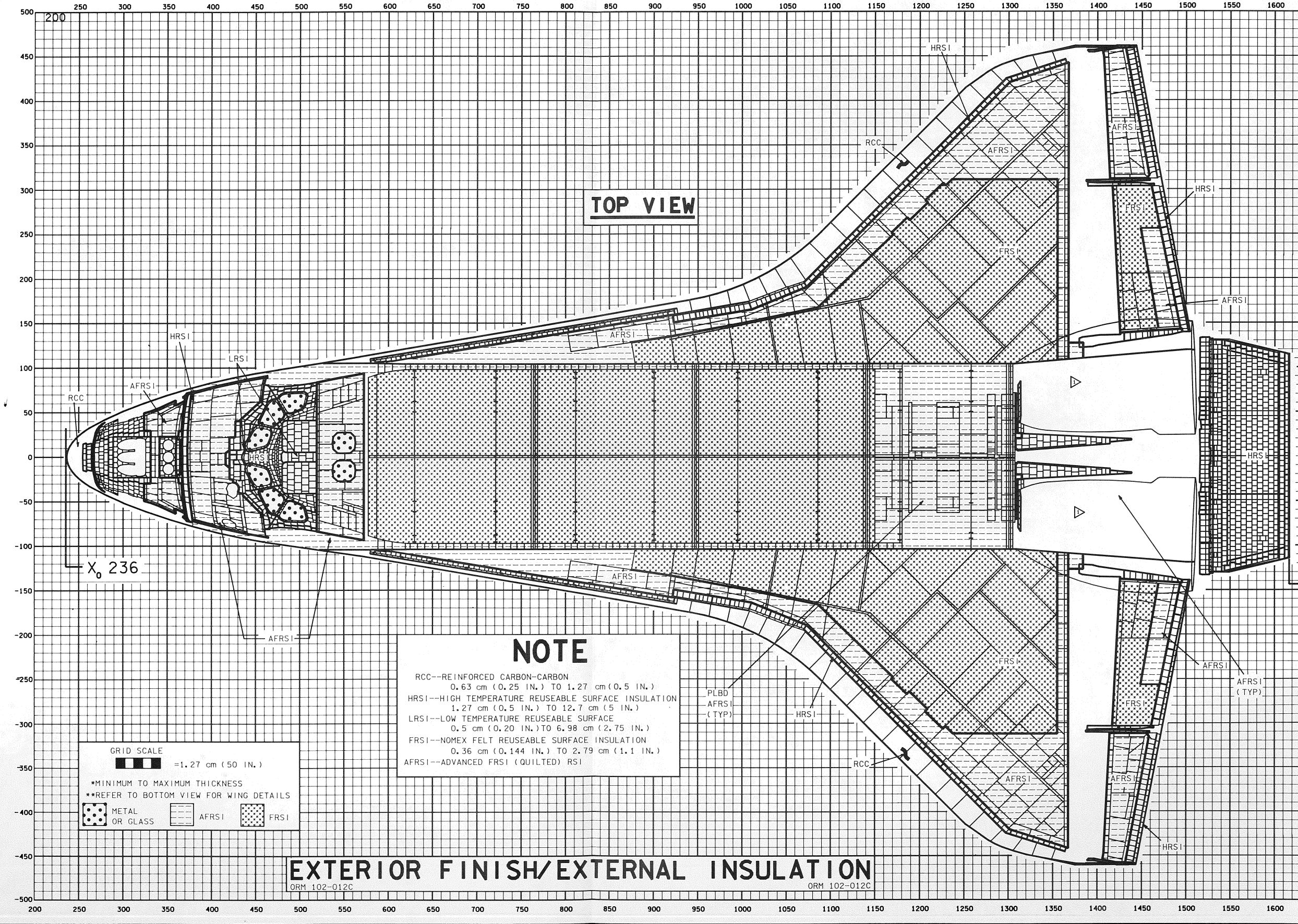

NOTE

RCC--REINFORCED CARBON-CARBON
0.63 cm (0.25 IN.) TO 1.27 cm (0.5 IN.)
HRSI--HIGH TEMPERATURE REUSEABLE SURFACE INSULATION
1.27 cm (0.5 IN.) TO 12.7 cm (5 IN.)
LRSI--LOW TEMPERATURE REUSEABLE SURFACE
0.5 cm (0.20 IN.) TO 6.98 cm (2.75 IN.)
FRSI--NOMEX FELT REUSEABLE SURFACE INSULATION
0.36 cm (0.144 IN.) TO 2.79 cm (1.1 IN.)
AFRSI--ADVANCED FRSI (QUILTED) RSI

GRID SCALE =1.27 cm (50 IN.)
*MINIMUM TO MAXIMUM THICKNESS
**REFER TO BOTTOM VIEW FOR WING DETAILS
METAL OR GLASS | AFRSI | FRSI

EXTERIOR FINISH/EXTERNAL INSULATION

ORM 102-012C

ORM 102-012C

BASIC REV E

DATE= 09/12/90

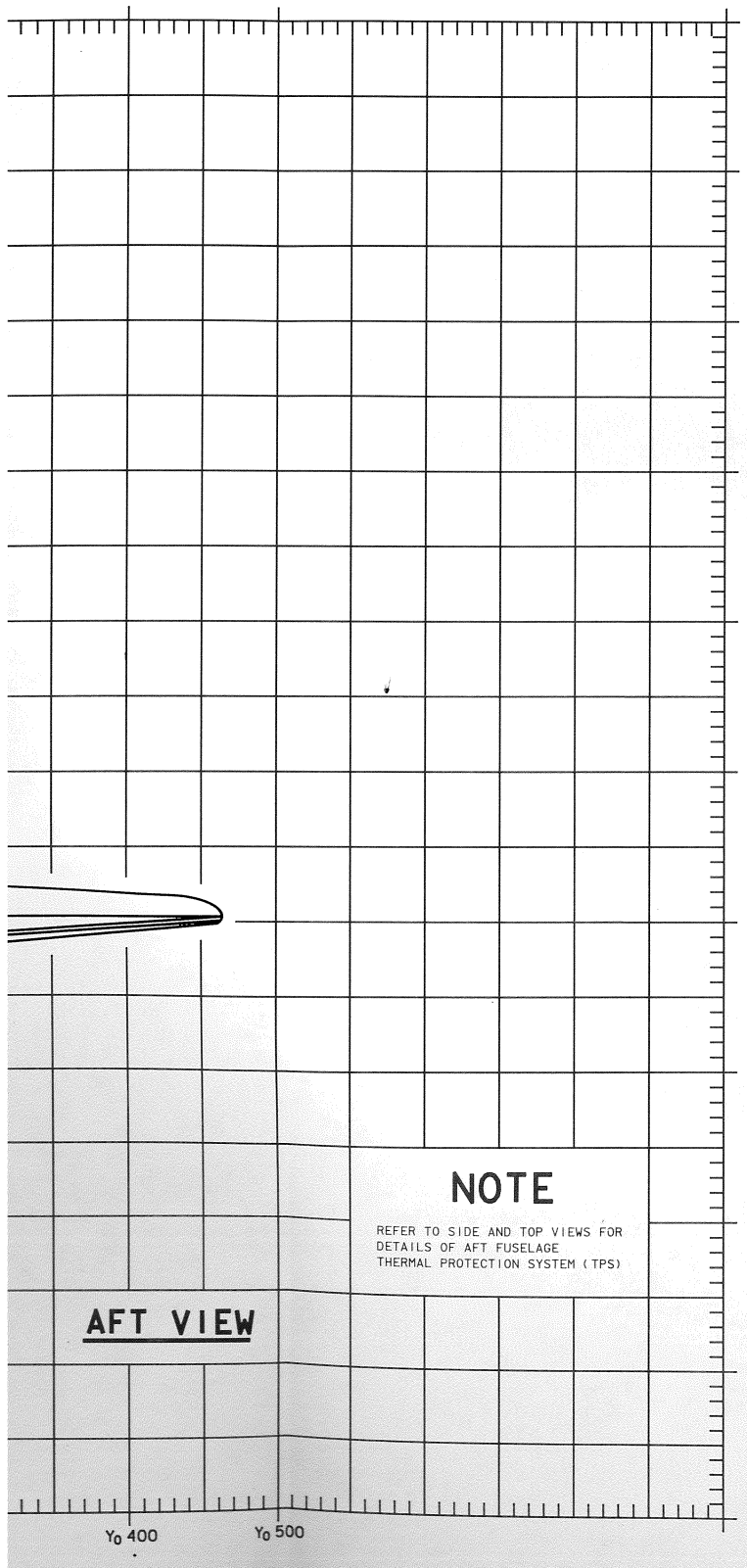

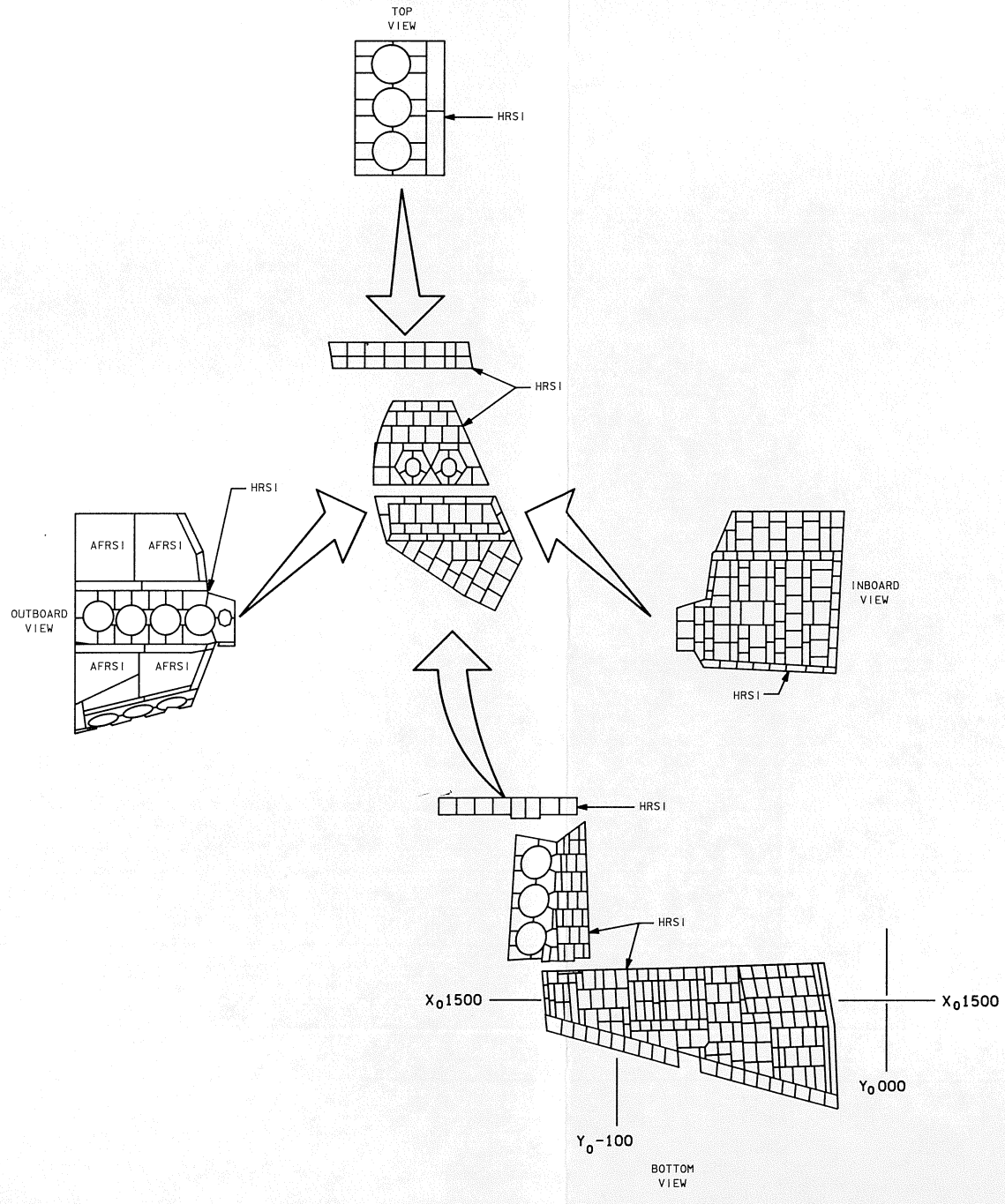

LH POD AFT RCS HOUSING

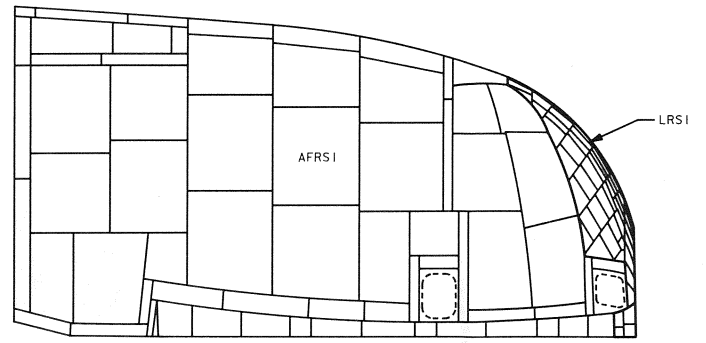

LH OMS POD "INBOARD"

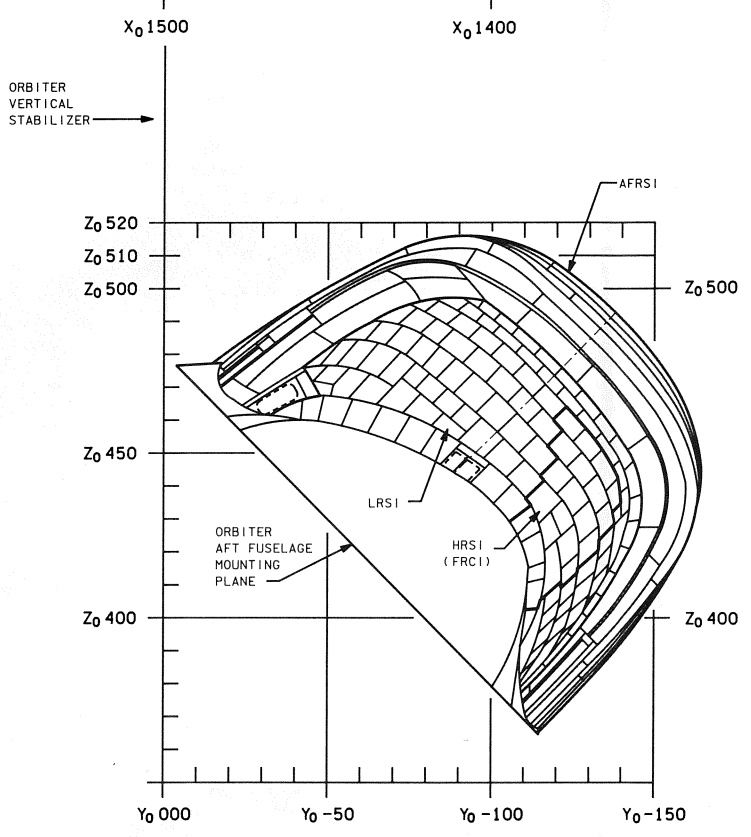

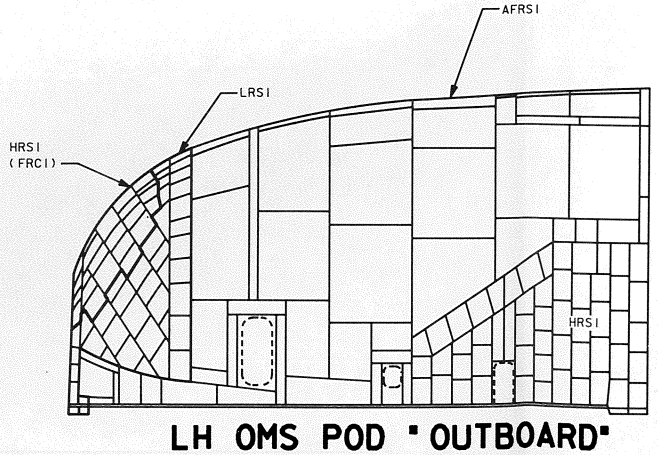

LH OMS POD "OUTBOARD"

DATE: 08/06/87	NAME: BJT	VERSION: INK,1
DATE: 09/25/90	NAME: SEW	VERSION: BPT,2
DATE: 09/12/90	NAME: MAG	VERSION: INK,2

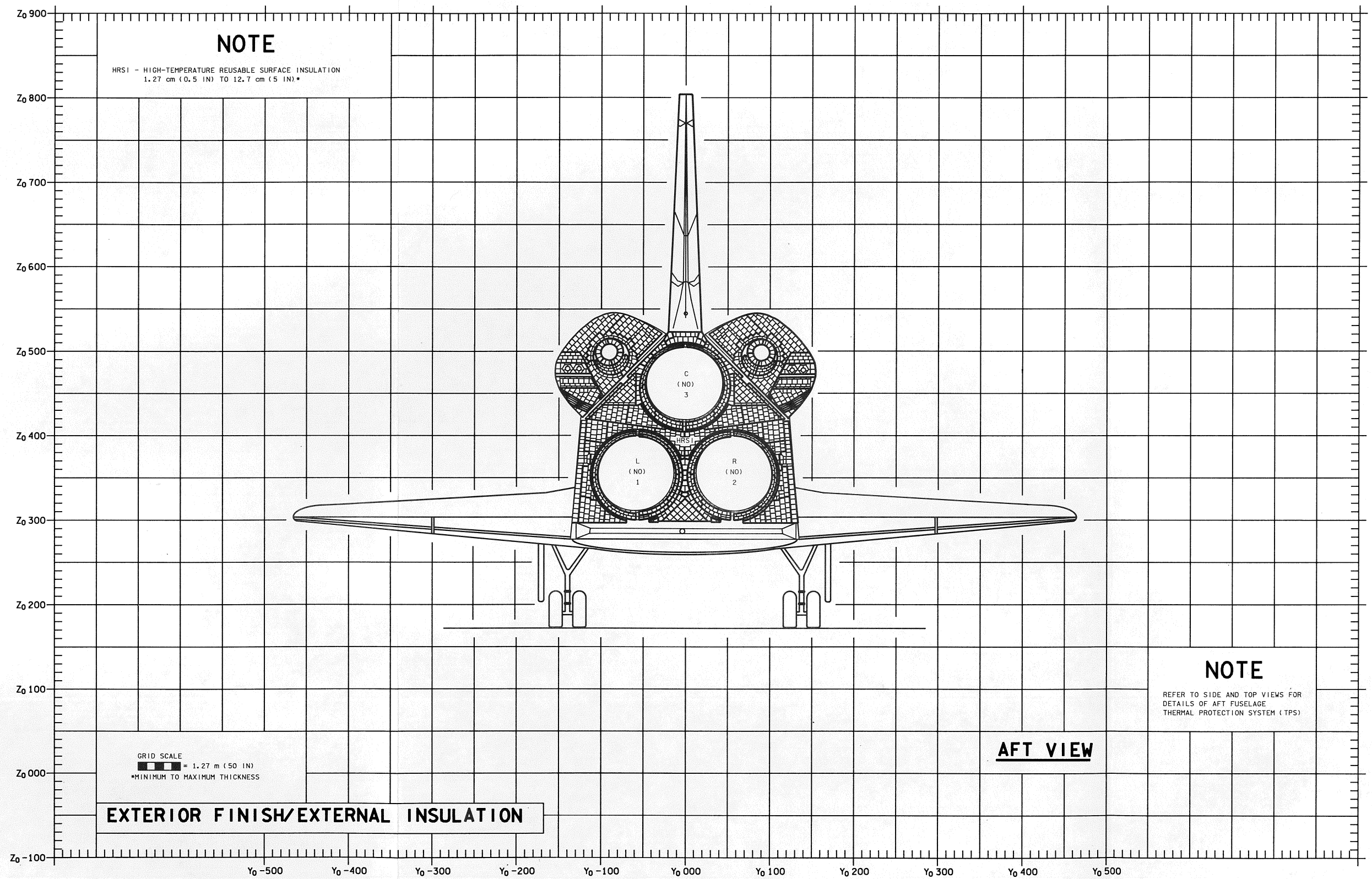

* 8 EX P/TILE 3

NATIONAL AERONAUTICS AND SPACE ADMINISTRATION LYNDON B. JOHNSON SPACE CENTER HOUSTON, TEXAS		SIGNATURE	DATE
EXTERNAL PENETRATIONS/TILE (AFT)		DSGN [signature]	10/31/84
		DR THERESA M WISONG	7/30/87
		ENGR V. HOWARD	7/21/90
		ENGR [signature]	9/21/90
		APP [signature]	9/21/90
DWG NO 7.8	SPACE SHUTTLE	APP	
	ALL	OMNIPLAN S. K. Kimball	10-17-90
SHEET 3 OF 4 PAGE	104.5 X 34	LTR E PCN	

BASIC REV E

DATE: 7/18/89	NAME: JMB	VERSION: INK 3
DATE: 7/21/89	NAME: SEW	VERSION: INK 4
DATE: 8/18/90	NAME: VSH	VERSION: INK 5

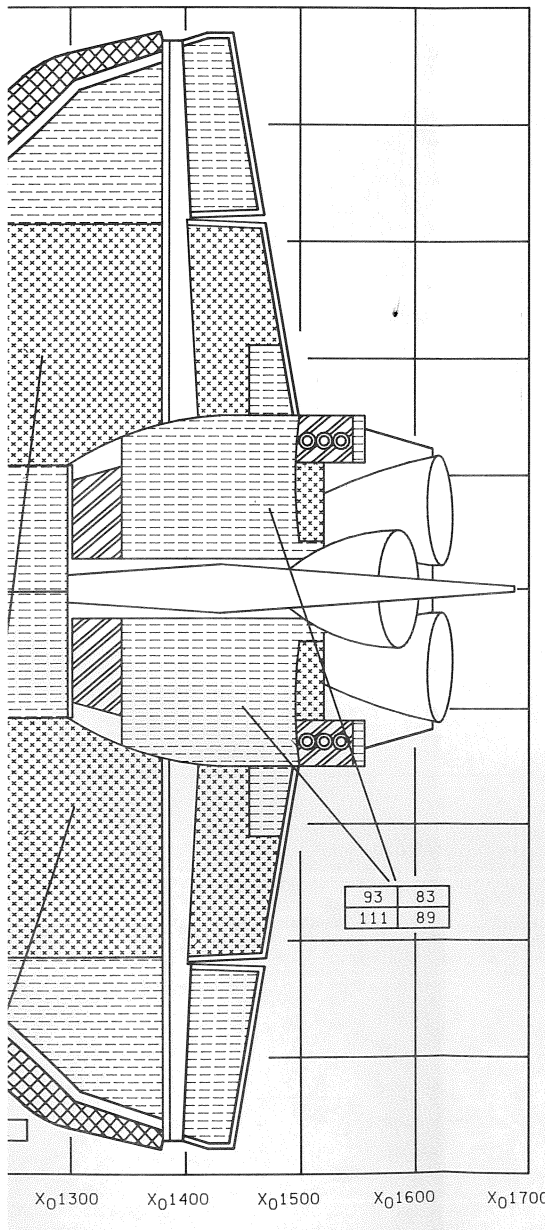

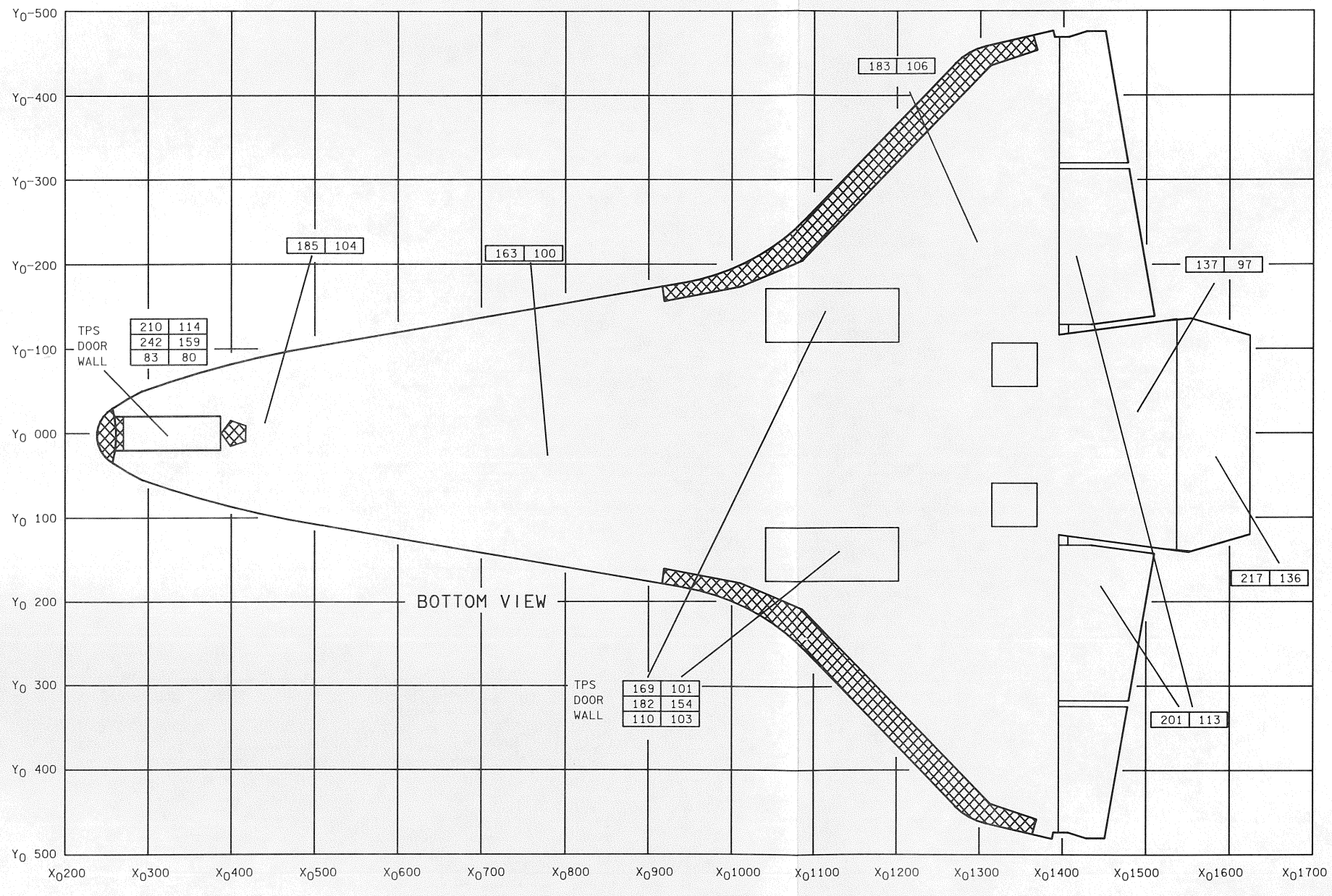

6. RCC CHIN PANEL ON OV102/104 ONLY. OV103 HAS HRSI TILE

5. OV 103/104 TPS CONFIGURATION. OV 102 WILL BE MODIFIED TO THIS CONFIGURATION EXCEPT FOR INSTRUMENTATION TILES

4. REFER TO TABLE 7-I FOR DRAWING REFERENCES

3. REFER TO SECTION II FOR GENERAL DETAILS AND SPECIFIC THICKNESS DATA RELATED TO PRESELECTED PENETRATION AND CUT-IN AREAS

2. POST-TOUCHDOWN TEMPERATURES OF THE ORBITER ARE INDICATED IN THE FOLLOWING MANNER

COMPONENT MEASURED	TOUCHDOWN	
	+4 MIN	+30 MIN

THERMAL PROTECTION SYSTEM (TPS) STRUCTURE

NOTES: 1. SINGLE-LEVEL BOXES INDICATE TPS TEMPERATURE ONLY.

CAUTION: IF ESCAPE PANEL RESCUE IS REQUIRED, THERMAL BLANKETS SHOULD BE USED TO PREVENT INJURY TO RESCUE PERSONNEL

8 EX PST TEMP 4

SIGNATURE	DATE	NATIONAL AERONAUTICS AND SPACE ADMINISTRATION LYNDON B. JOHNSON SPACE CENTER HOUSTON, TEXAS
DSGN THERESA WISONG	10/30/84	
DR		
ENGR K. TURNER	8/17/90	EXTERNAL POST TEMPERATURES
ENGR	9/25/90	
APP	9/28/90	
APP		SPACE SHUTTLE / DWG NO 7.8
OMNIPLAN S.E. Lindsey	10-16-90	ALL
LTR E / PCN		126.5 X 34 / PAGE / SHEET 4 OF 4

BASIC REV E

T | S | R | Q | P | O | N | M | L | K | J

ACE INSULATION (BLACK)

SULATION (WHITE)

SULATION (WHITE)

BLE SURFACE INSULATION (WHITE)

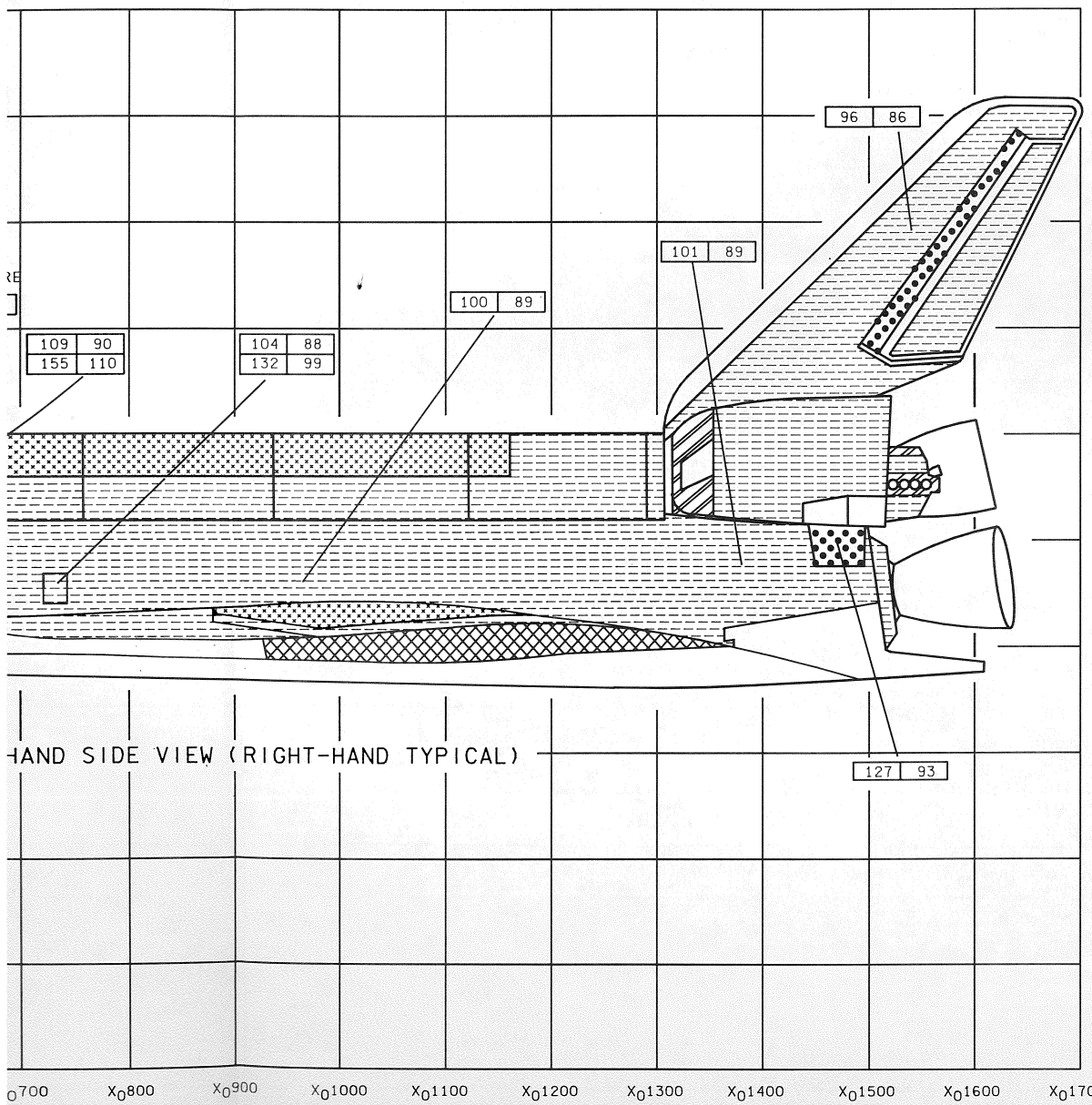

HAND SIDE VIEW (RIGHT-HAND TYPICAL)

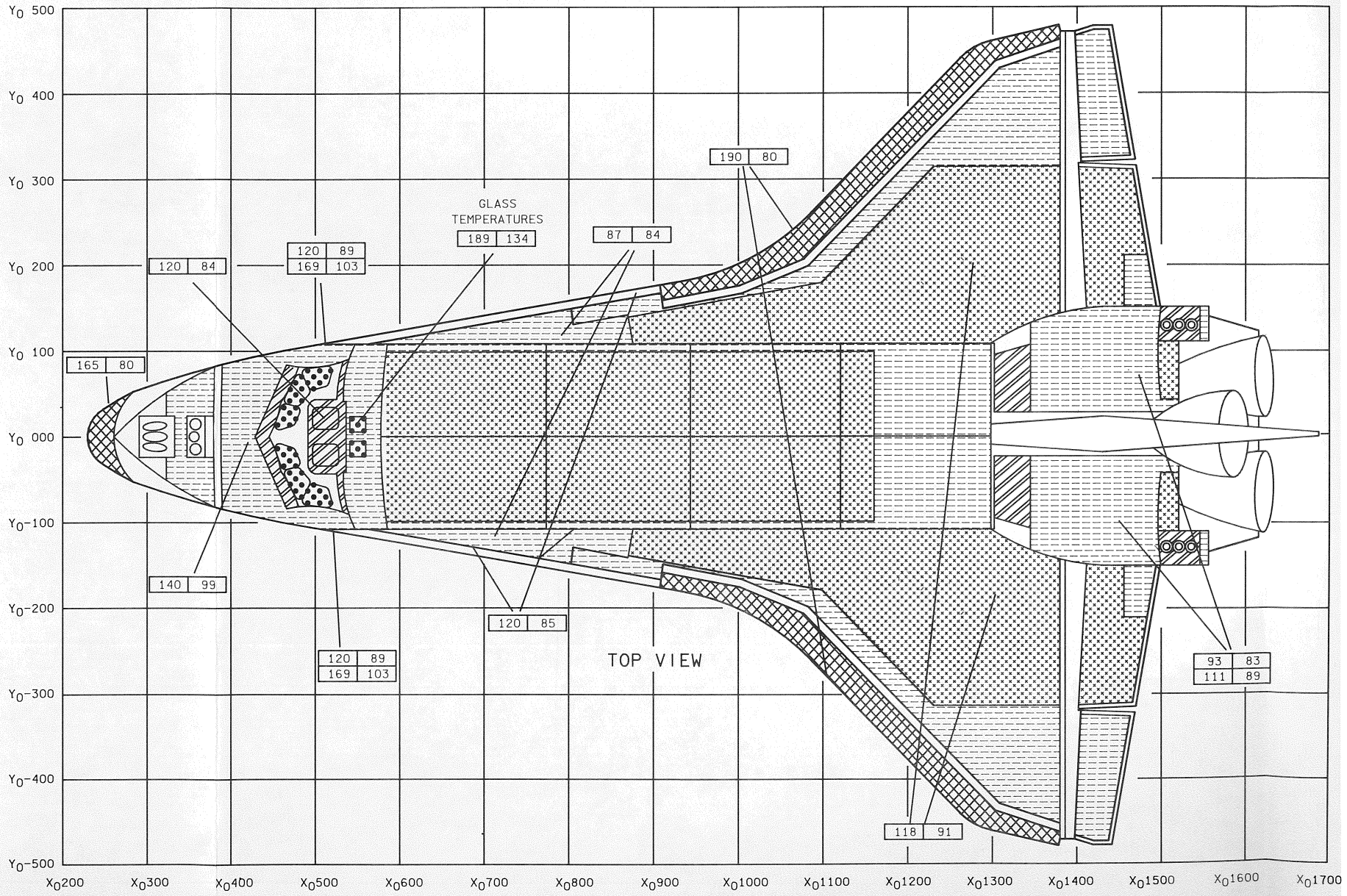

DATE: 8/18/90 | NAME: VSH | VERSION: INK5

W V U T S R Q P O N

8 7 6 5 4 3 2 1

RCC - REINFORCED CARBON-CARBON (BLACK)

HRSI/FRCI - HIGH-TEMPERATURE REUSABLE SURFACE INSULATION (BLACK)

LRSI - LOW-TEMPERATURE REUSABLE SURFACE INSULATION (WHITE)

FRSI - FRSI-NOMEX FELT REUSABLE SURFACE INSULATION (WHITE)

METAL OR GLASS

AFRSI - ADVANCED-FRSI (QUILTED) FELT REUSABLE SURFACE INSULATION (WHITE)

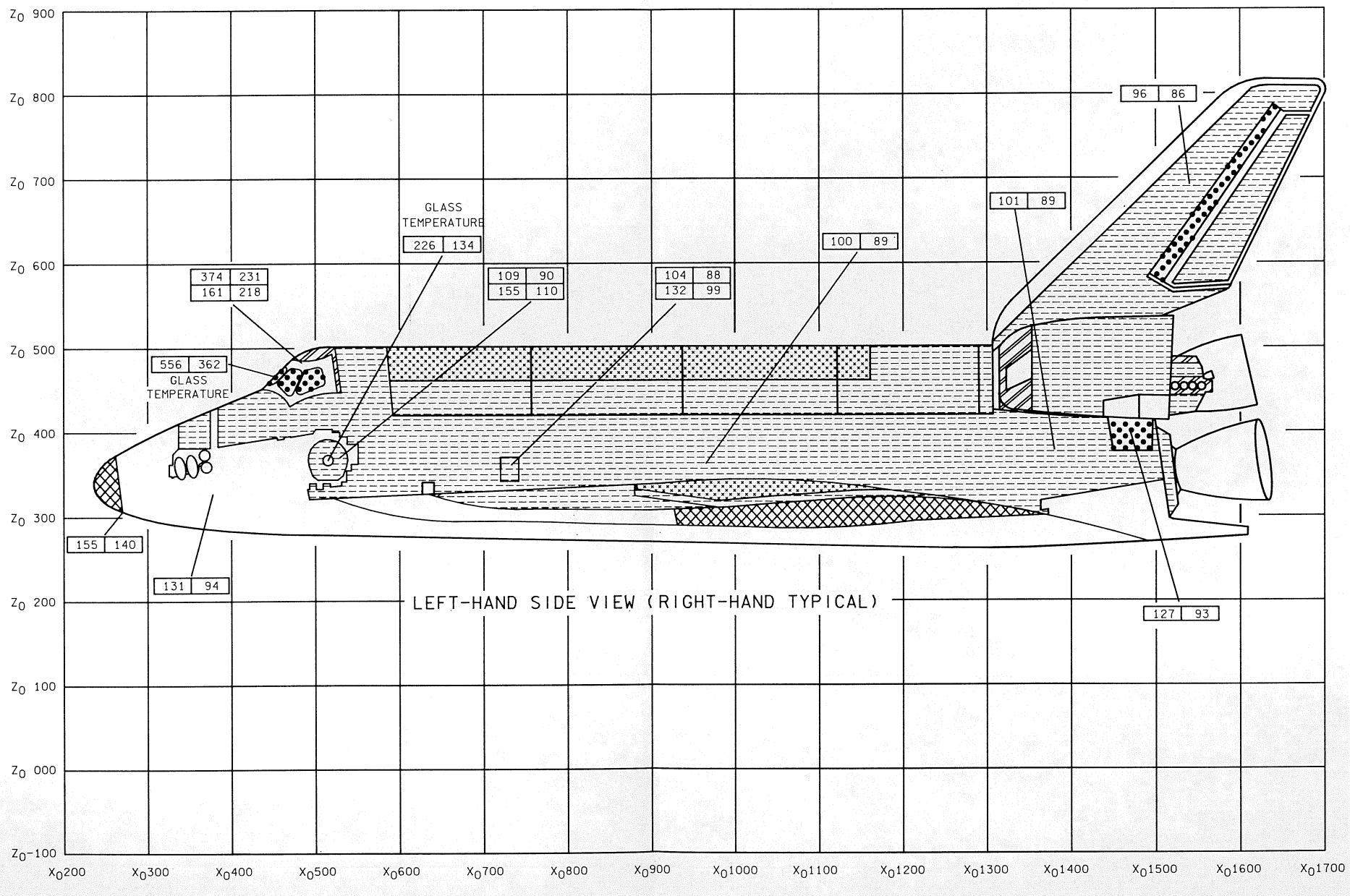

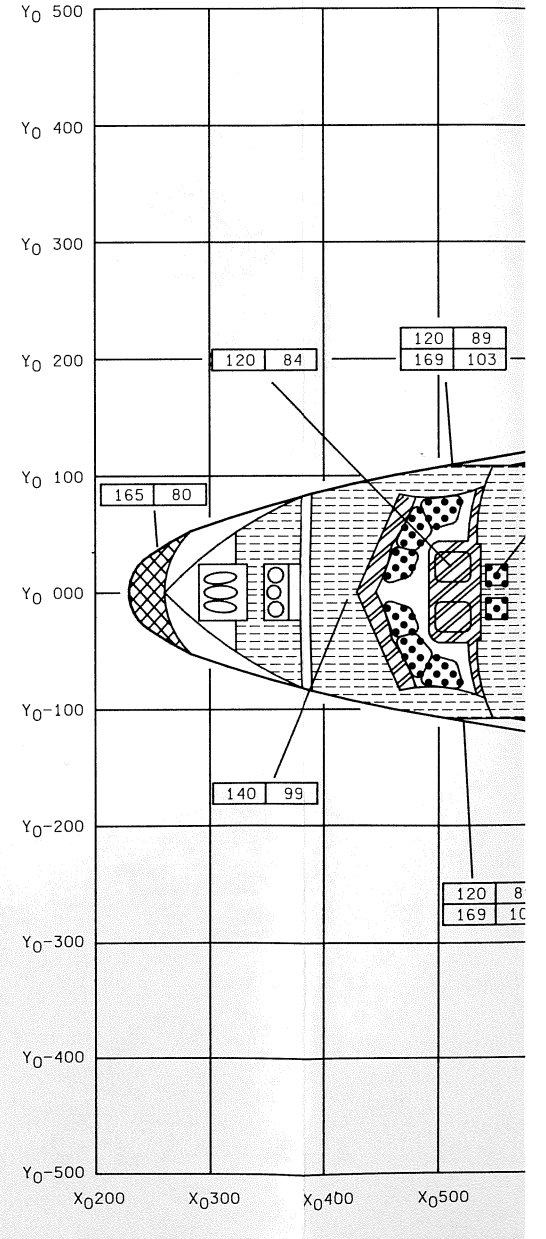

BASIC REV E

FOR DETAILED COMPONENT AND LOGIC INFORMATION REFER TO:

SSSH DWG NO.	SSSH DWG TITLE	VENDOR NAME	VENDOR DWG NO.	VENDOR SHEET NO.	REV	DATE	VENDOR DRAWING TITLE
7.1 (Sheets 1 and 2)	ATCS	R. I.	VS70-630109		J	10/7/89	SCHEMATIC DIAGRAM - ACTIVE THERMAL CONTROL
		R. I.	VS70-630102		T	12/5/89	SCHEMATIC DIAGRAM - ACTIVE THERMAL CONTROL
		R. I.	VS70-634102		B	7/27/90	ACTIVE THERMAL CONTROL SYSTEM - FLUID SCHEMATIC DIAGRAM
		R. I.	V070-634530		C	8/13/85	RADIATOR INSTALLATION ECLSS ACTIVE THERMAL CONTROL SYSTEM
		R. I.	V070-635100		B	4/27/87	COOLANT INSTALLATION AFT AVIONICS EQUIPMENT
		R. I.	VS70-750202		L	6/6/89	SCHEMATIC DIAGRAM - OI POWER AND CONTROL
7.2	AMMONIA BOILER SYSTEM	R. I	VS70-630109		J	10/7/89	SCHEMATIC DIAGRAM - ACTIVE THERMAL CONTROL
		R. I.	VS70-630102		T	12/5/89	SCHEMATIC DIAGRAM - ACTIVE THERMAL CONTROL
		R. I.	VS70-634102		B	7/27/90	ACTIVE THERMAL CONTROL SYSTEM - FLUID SCHEMATIC DIAGRAM
		R. I.	VS70-750202		L	6/6/89	SCHEMATIC DIAGRAM - OI POWER AND CONTROL
7.3 (Sheets 1 and 2)	FLASH EVAPORATOR SUBSYSTEM		V070-634485		D	9/13/88	LINE HEATER INSTALLATION
			VS70-630109		H	7/15/88	SCHEMATIC DIAGRAM ACTIVE THERMAL CONTROL
			VO70-755192		C	11/18/81	INSTRUMENTATION INSTALLATION - ECLSS OPERATIONAL
			VS70-630102		T	12/5/84	SCHEMATIC DIAGRAM ACTIVE THERMAL CONTROL
			VO70-754109		B	2/9/89	INSTRUMENTATION INSTL - OFI MID FUSELAGE
			VS70-634102		A	7/31/79	SCHEMATIC ACTIVE THERMAL CONTROL SUBSYSTEM
			VO70-754102		F	4/15/87	INSTRUMENTATION INSTL - OFI MID FUSELAGE
7.4	ARS H_2O	R. I.	V070-613896	1-7	E	10/24/85	WATER COOLANT SYSTEM INSTALLATION. ARS, FLIGHT DECK AND DFI. ECLSS
		R. I.	V070-613360	1-3	B/C03	11/3/80	COOLANT INSTL-AVIONICS EQUIPMENT. FORWARD BAY 1 AND 2
		R. I.	V070-613361	1-5	E	11/29/82	COOLANT SYSTEM INSTALLATION AVIONIC EQUIPT CREW MODULE, BAY 3B
		R. I.	V070-613362	1-3	B	3/11/88	INSTALLATION-WATER COOLANT, AVIONICS BAY 3A COLD PLATES
		R. I.	VS70-960102		F04	11/8/89	INTEGRATED SYSTEM SCHEMATIC ORBITER 0V-102 ENVIRONMENTAL CONTROL AND LIFE SUPPORT SUBSYSTEM
		R. I.	VS70-960102	12(60CA)	F04	9/15/89	ARS CABIN AIR CIRCULATION AND TEMPERATURE CONTROLLER 1
		R. I.	VS70-960102	13(60CB)	F04	9/15/89	ARS CABIN AIR CIRCULATION AND TEMPERATURE CONTROLLER 2
		R. I.	VS70-960102	15(60CD)	F04	8/7/89	ARS WATER COOLANT LOOP 1 FLUIDS/CONTROL
		R. I.	VS70-960102	16(60CE)	F01	3/15/84	ARS WATER COOLANT LOOP 1 CONTROL
		R. I.	VS70-960102	17(60CF)	F01	3/16/84	ARS WATER COOLANT LOOP 2 FLUIDS/CONTROL
		R. I.	VS70-960102	18(60CG)	F02	1/17/85	ARS WATER COOLANT LOOP 2 CONTROL

DWG	SIGNATURE	DATE	DWG	SIGNATURE	DATE
7.1	ENGR M. LANGLEY			ENGR	
	ENGR Mary M Langley	11/12/91		ENGR	
7.2	ENGR M. LANGLEY			ENGR	
	ENGR Mary M Langley	11/12/91		ENGR	
7.3	ENGR V. HOWARD			APP Mark J Fissey	11-15-91
	ENGR V. Howard	11/6/91		APP	
7.4	ENGR J. SPIVEY			OMNIPLAN	
	ENGR	11/12/91		LTR E PCN 1	

NATIONAL AERONAUTICS AND SPACE ADMINISTRATION
LYNDON B. JOHNSON SPACE CENTER HOUSTON, TEXAS

VENDOR DRAWING REFERENCES

SPACE SHUTTLE ALL | TBL NO 7-I | PAGE 7.I-1 | SHEET 1 OF 4

BASIC REV E-1

FOR DETAILED COMPONENT AND LOGIC INFORMATION REFER TO:

SSSH DWG NO.	SSSH DWG TITLE	VENDOR NAME	VENDOR DWG NO.	VENDOR SHEET NO.	REV	DATE	VENDOR DRAWING TITLE
7.4 (CONC'D)	ARS H_2O	R. I.	VS70-960099		A12	1/24/84	INTEGRATED SYSTEM SCHEMATIC ORBITER OV-099, -103, AND -104 ENVIRONMENTAL CONTROL AND LIFE SUPPORT SUBSYSTEM
		R. I.	VS70-960099	12(60CA)	A12	12/28/84	ARS CABIN AIR CIRCULATION AND TEMPERATURE CONTROLLER 1
		R. I.	VS70-960099	13(60CB)	A08	5/22/84	ARS CABIN AIR CIRCULATION AND TEMPERATURE CONTROLLER 2
		R. I.	VS70-960099	15(60CD)	A08	5/23/84	ARS WATER COOLANT LOOP 1 FLUIDS/CONTROL
		R. I.	VS70-960099	16(60CE)	A12	1/15/82	ARS WATER COOLANT LOOP 1 CONTROL
		R. I.	VS70-960099	17(60CF)	A07	1/19/84	ARS WATER COOLANT LOOP 2 FLUIDS/CONTROL
		R. I.	VS70-960099	18(60CG)	A12	12/28/88	ARS WATER COOLANT LOOP 2 CONTROL
		R. I.	VS70-960099	23(60CM)	A08	5/25/84	ARS CABIN AIR CIRCULATION INSTRUMENTATION
		R. I.	VS70-960099	24(60CN)	A05	6/02/83	ARS WATER COOLANT LOOP 1 INSTRUMENTATION, PART I
		R. I.	VS70-960099	25(60CP)	A07	1/19/84	ARS WATER COOLANT LOOP 2 INSTRUMENTATION, PART I
		R. I.	VS70-960099	26(60CS)	A05	6/03/83	ARS WATER COOLANT LOOP 1 INSTRUMENTATION, PART II
		R. I.	VS70-960099	27(60CT)	NC	4/17/80	ARS WATER COOLANT LOOP 2 INSTRUMENTATION, PART II
		R. I.	VS70-610109	1-8	E	4/23/88	SCHEMATIC DIAGRAM-ATMOSPHERIC REVITALIZATION SUBSYSTEM
		R. I.	VO70-613891	1-7	E	7/6/87	ARS WATER COOLANT SYSTEM INSTALLATION-CREW MODULE, MID-DECK TO FLIGHT DECK
		R. I.	VO70-613890	1-4	C	6/21/85	WATER SYSTEM INSTALLATION-ARS COOLING CABIN, ECLSS
7.5	THERMAL AFT FUSELAGE	R. I.	V070-635100	1,2	B	4/27/87	COOLANT INSTALLATION - AFT AV EQUIPMENT
		R. I.	V070-635300	1-24	E	8/6/88	THERMAL CONTROL INSTL-ECLSS ACTIVE, AFT FUSELAGE
		R. I.	V070-635103	1-3	A	8/27/79	COLDPLATE - AFT FUS AV EQUIPMENT SHELF 3, BAY 4
		R. I.	V070-705114	1-5	G/H13	4/9/87	EQUIPMENT INSTALLATION - AFT AV BAY 4
		R. I.	V070-705205	1-5	H	4/9/87	EQUIPMENT INSTALLATION - AFT AV BAY 5
		R. I.	V070-705306	1-4	G/H03	3/31/86	EQUIPMENT INSTALLATION - AFT AV BAY 6
		R. I.	V070-755192	1-2	C	11/18/81	INSTRUMENTATION INSTALLATION - ECLSS OPERATIONAL
		R. I.	V070-755102	1-2	E	3/3/89	INSTRUMENTATION INSTALLATION AFT FUSELAGE, OPERATIONAL

DWG	SIGNATURE	DATE	DWG	SIGNATURE	DATE
7.4	ENGR J. SPIVEY			ENGR	
(CONC'D)	ENGR J. L. Spivey	10/1/90		ENGR	
7.5	ENGR J. L. SPIVEY			ENGR	
	ENGR J. L. Spivey	10/1/90		ENGR	
	ENGR			APP Mark H. Ferring	10/23/90
	ENGR			APP	
	ENGR			OMNIPLAN	
	ENGR			LTR E PCN	

NATIONAL AERONAUTICS AND SPACE ADMINISTRATION
LYNDON B. JOHNSON SPACE CENTER HOUSTON, TEXAS

VENDOR DRAWING REFERENCES

SPACE SHUTTLE | TBL NO 7-I

ALL

BASIC REV E

FOR DETAILED COMPONENT AND LOGIC INFORMATION REFER TO:

SSSH DWG NO.	SSSH DWG TITLE	VENDOR NAME	VENDOR DWG NO.	VENDOR SHEET NO.	REV	DATE	VENDOR DRAWING TITLE
7.6	TCS - INSTRUMENTATION MID FUSELAGE	NASA	JSC-18366		-	7/88	OI SPACE SHUTTLE ORBITER TCS TEMPERATURE MEASUREMENT LOCATIONS
		RI	V070-582061			-	TBS
		RI	V070-584050		F	1/17/90	HYDRAULICS SUBSYSTEM INSTALLATION -MID FUSE
		RI	VO70-586096		-	8/27/80	HYDRAULICS SUBSYSTEM INSTALLATION -RH WING AND ELEVON ACTUATORS
		RI	V070-586140		D	11/22/89	HYDRAULICS SUBSYSTEM INSTALLATION
		RI	V070-586145		B	5/27/88	HYDRAULICS SUBSYSTEM INSTALLATION - RIGHT- HAND MLG WHEEL WELL
		RI	V070-586266		C	8/12/88	HYDRAULICS SUBSYSTEM INSTALLATION -STRUT, MAIN LANDING GEAR
		RI	V070-634460		H	6/15/88	MID FUSELAGE SYBSYSTEM ECLSS INSTL - FRAME Xo582 THROUGH Xo693
		RI.	V070-634465				TBS
		RI	V070-754102				TBS
		RI	V070-754109				TBS
		RI	V070-754192		B	02/08/89	INSTRUMENTATION INSTALLATION - OFI MID FUS Xo576 THROUGH Xo1307
7.7	TPS/STRUCTURE INSTRUMENTATION	RI	V070-756101	ALL	-	7/27/81	INSTRUMENTATION INSTALLATION - WING
		RI	V070-754106	ALL	-	7/23/81	INSTRUMENTATION INSTALLATION - PLBD
		RI	V070-751102	ALL	A	10/21/80	INSTRUMENTATION INSTALLATION OPERATIONAL FORWARD FUSELAGE - UPPER
		RI.	V070-192135	ALL	C	10/20/88	TPS INSTALLATION - INSTRUMENTATION
		RI	V070-754104	ALL	-	6/22/81	INSTRUMENTATION INSTALLATION - MID FUSELAGE, LOWER SURFACE
		RI	V070-752102	ALL	D	5/14/87	INSTRUMENTATION INSTALLATION FORWARD FUSELAGE, LOWER
		RI	V070-755102	ALL	E	3/3/89	INSTRUMENTATION INSTALLATION - AFT FUSELAGE, OPERATIONAL
		MD	73A760210	1-10	E	1/5/81	ELECTRICAL INSTALLATION POD - OPERATIONAL
		RI	V070-754103	ALL	-	6/27/81	INSTRUMENTATION INSTALLATION - MID FUSELAGE, SIDEWALL
		RI	V070-751012	ALL	B	4/29/83	INSTRUMENTATION INSTALLATION, FORWARD RCS, STRUCTURE, OFI
		RI	V070-754105	ALL	-	7/21/81	INSTRUMENTATION INSTALLATION - Xo582 FRAME DEVELOPMENT

DWG	SIGNATURE	DATE	DWG	SIGNATURE	DATE
7.6	ENGR L. RICHE			ENGR	
	ENGR L. Riche	10/23/90		ENGR	
7.7	ENGR J. M. SOLOMON			ENGR	
	ENGR J. M. Solomon	10/23/90		ENGR	
	ENGR			APP Mark D. Fenning	10/23/90
	ENGR			APP	
	ENGR			OMNIPLAN	
	ENGR			LTR E	PCN

NATIONAL AERONAUTICS AND SPACE ADMINISTRATION
LYNDON B. JOHNSON SPACE CENTER HOUSTON, TEXAS

VENDOR DRAWING REFERENCES

SPACE SHUTTLE ALL | TBL NO 7-I | PAGE 7.I-3 | SHEET 3 OF 4

BASIC REV E

FOR DETAILED COMPONENT AND LOGIC INFORMATION REFER TO:

SSSH DWG NO.	SSSH DWG TITLE	VENDOR NAME	VENDOR DWG NO.	VENDOR SHEET NO.	REV	DATE	VENDOR DRAWING TITLE
7.8 (SHEETS 1-4)	EXTERNAL TILE DRAWING	R. I.	V70-900-030 V70-900-040	-01	C	7/30/85	LOWER FUSELAGE
		R. I.	V70-900-030 V70-900-040	-02	C	9/16/85	LOWER WING LH
		R. I.	V70-900-030 V70-900-040	-04	C	9/12/85	LOWER WING RH
		R. I.	V70-900-030 V70-900-040	-05	B	9/23/85	UPPER FUSELAGE
		R. I.	V70-900-030 V70-900-040	-06	B	9/13/85	UPPER WING LH
		R. I.	V70-900-030 V70-900-040	-07	B	9/09/85	UPPER WING RH
		R. I.	V70-900-030 V70-900-040	-08	C	7/25/85	FUSELAGE LH SIDE
		R. I.	V70-900-030 V70-900-040	-09	C	9/10/85	FUSELAGE RH SIDE
		R. I.	V70-900-030 V70-900-040	-10	C	5/30/86	VERTICAL STABILIZER
		R. I.	V70-900-030 V70-900-040	-11	C	1/14/85	AFT HEAT SHIELD, OMS POD, RCS POD
		R. I.	V070-391147	-01	-	1/15/87	LOWER FORWARD FUSELAGE CHIN PANEL

DWG	SIGNATURE	DATE	DWG	SIGNATURE	DATE
7.8-1,4	ENGR K. TURNER			ENGR	
	ENGR K. Turner	10/2/90		ENGR	
7.8-2,3	ENGR V. HOWARD			ENGR	
	ENGR Vern Howard	10/2/90		ENGR	
	ENGR			APP Mark A. Fenning	10/25/90
	ENGR			APP	
	ENGR			OMNIPLAN	
	ENGR			LTR E PCN	

NATIONAL AERONAUTICS AND SPACE ADMINISTRATION
LYNDON B. JOHNSON SPACE CENTER HOUSTON, TEXAS

VENDOR DRAWING REFERENCES

SPACE SHUTTLE | TBL NO 7-1

ALL

BASIC REV E

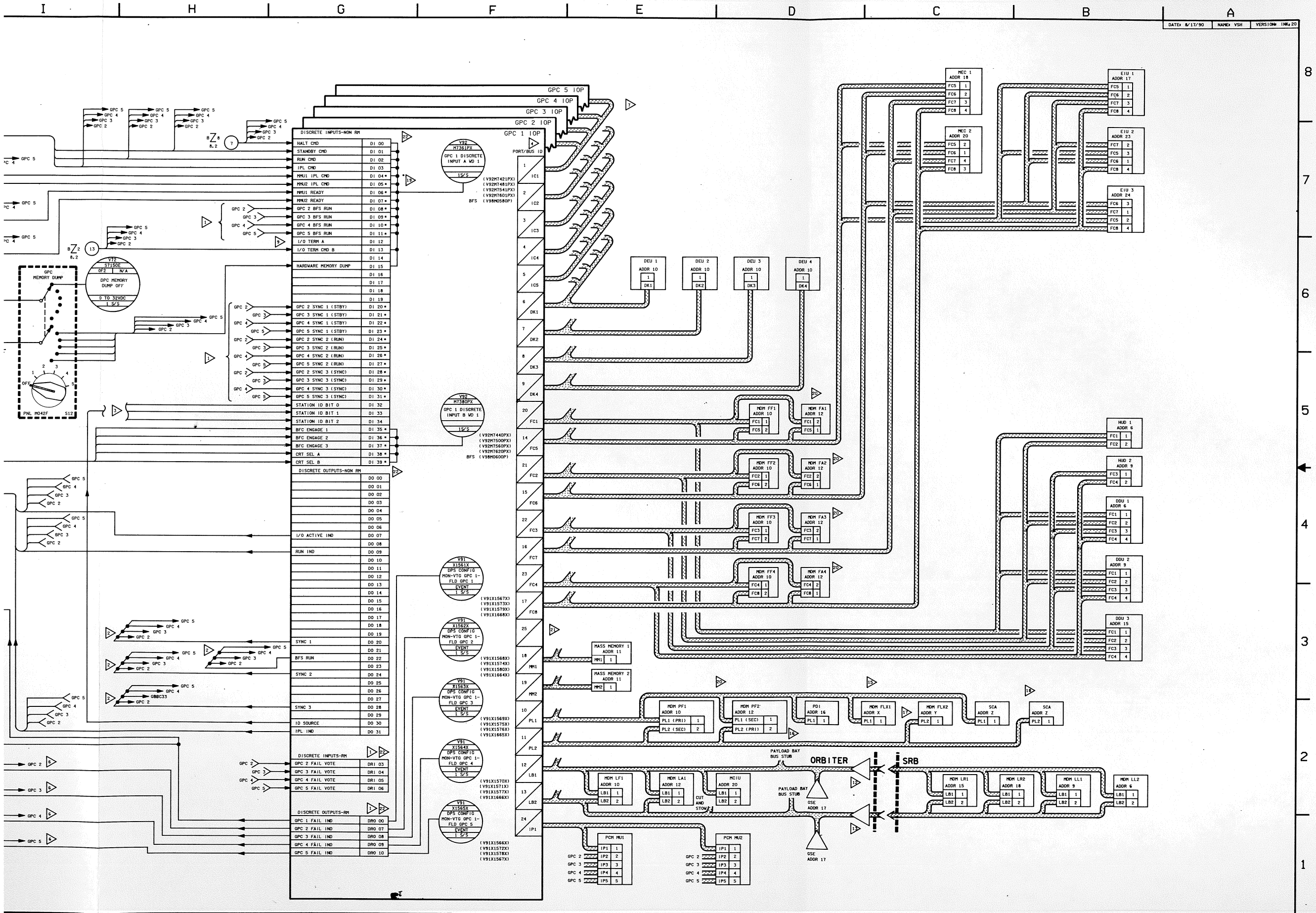

DATE: 8/17/90
NAME: VSH
VERSION: INK 20
DISCRETE INPUTS-NON RM
HALT CMD
STANDBY CMD
RUN CMD
IPL CMD
MMU1 IPL CMD
MMU2 IPL CMD
MMU1 READY
MMU2 READY
GPC 2 BFS RUN
GPC 3 BFS RUN
GPC 4 BFS RUN
GPC 5 BFS RUN
I/O TERM A
I/O TERM CMD B
HARDWARE MEMORY DUMP
GPC 2 SYNC 1 (STBY)
GPC 3 SYNC 1 (STBY)
GPC 4 SYNC 1 (STBY)
GPC 5 SYNC 1 (STBY)
GPC 2 SYNC 2 (RUN)
GPC 3 SYNC 2 (RUN)
GPC 4 SYNC 2 (RUN)
GPC 5 SYNC 2 (RUN)
GPC 2 SYNC 3 (SYNC)
GPC 3 SYNC 3 (SYNC)
GPC 4 SYNC 3 (SYNC)
GPC 5 SYNC 3 (SYNC)
STATION ID BIT 0
STATION ID BIT 1
STATION ID BIT 2
BFC ENGAGE 1
BFC ENGAGE 2
BFC ENGAGE 3
CRT SEL A
CRT SEL B
DISCRETE OUTPUTS-NON RM
I/O ACTIVE IND
RUN IND
SYNC 1
BFS RUN
SYNC 2
SYNC 3
ID SOURCE
IPL IND
DISCRETE INPUTS-RM
GPC 2 FAIL VOTE
GPC 3 FAIL VOTE
GPC 4 FAIL VOTE
GPC 5 FAIL VOTE
DISCRETE OUTPUTS-RM
GPC 1 FAIL IND
GPC 2 FAIL IND
GPC 3 FAIL IND
GPC 4 FAIL IND
GPC 5 FAIL IND
GPC 5 IOP
GPC 4 IOP
GPC 3 IOP
GPC 2 IOP
GPC 1 IOP
PORT/BUS IO
GPC MEMORY DUMP
DPC MEMORY DUMP OFF
PNL M042F
MEC 1 ADDR 18
MEC 2 ADDR 20
EIU 1 ADDR 17
EIU 2 ADDR 23
EIU 3 ADDR 24
DEU 1 ADDR 10
DEU 2 ADDR 10
DEU 3 ADDR 10
DEU 4 ADDR 10
MDM FF1 ADDR 10
MDM FA1 ADDR 12
MDM FF2 ADDR 10
MDM FA2 ADDR 12
MDM FF3 ADDR 10
MDM FA3 ADDR 12
MDM FF4 ADDR 10
MDM FA4 ADDR 12
HUD 1 ADDR 6
HUD 2 ADDR 9
DDU 1 ADDR 6
DDU 2 ADDR 9
DDU 3 ADDR 15
MASS MEMORY 1 ADDR 11
MASS MEMORY 2 ADDR 11
MDM PF1 ADDR 10
MDM PF2 ADDR 12
PDI ADDR 16
MDM FLX1 ADDR X
MDM FLX2 ADDR Y
SCA ADDR Z
PAYLOAD BAY BUS STUB
ORBITER
SRB
MDM LF1 ADDR 10
MDM LA1 ADDR 12
MCIU ADDR 20
CUT AND STOW
GSE ADDR 17
MDM LR1 ADDR 15
MDM LR2 ADDR 18
MDM LL1 ADDR 9
MDM LL2 ADDR 6
PCM MU1
PCM MU2

BASIC REV E

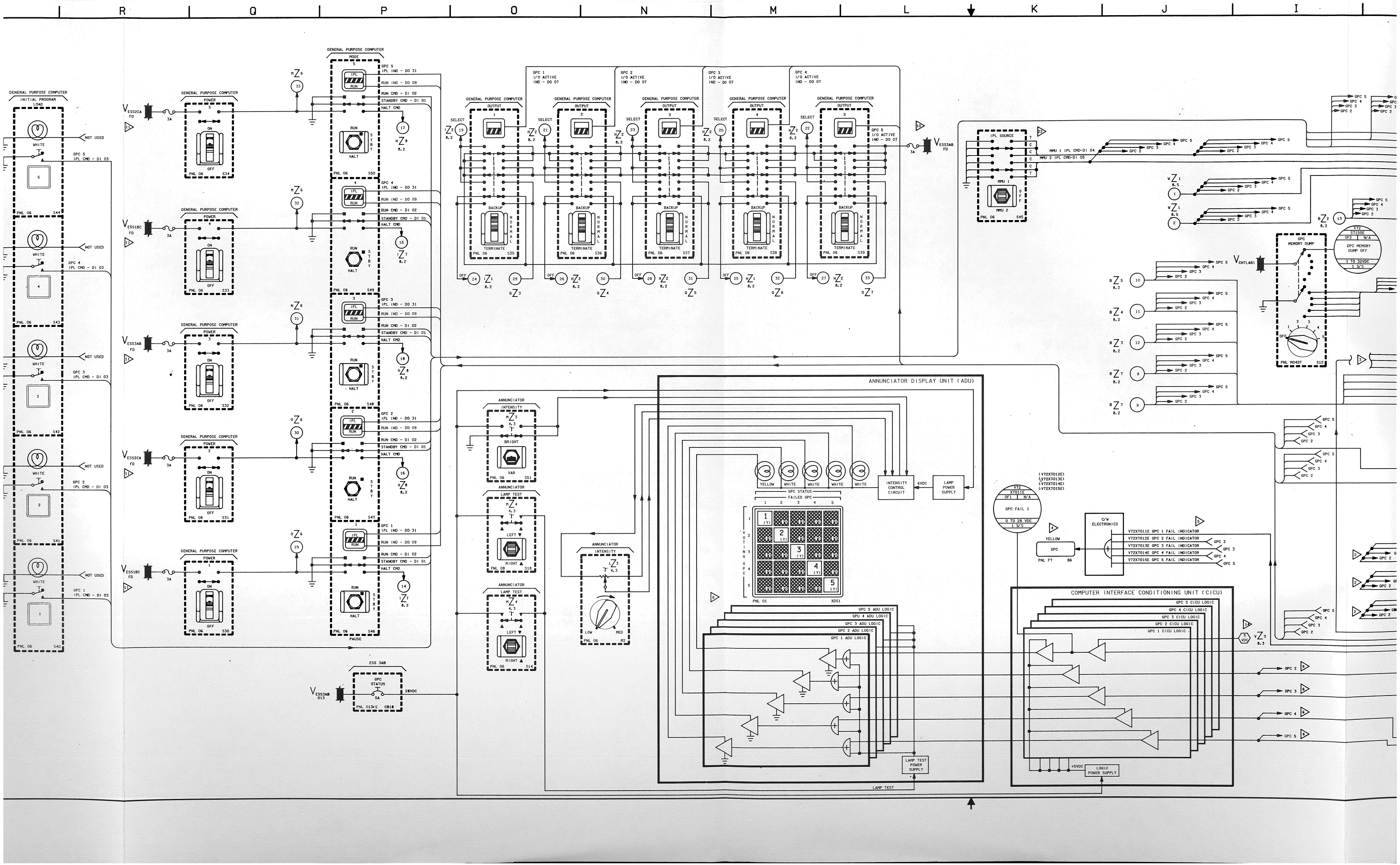

R
Q
P
O
N
M
L
K
J
I
GENERAL PURPOSE COMPUTER
INITIAL PROGRAM LOAD
WHITE
NOT USED
GPC 5 IPL CMD - DI 03
GPC 4 IPL CMD - DI 03
GPC 3 IPL CMD - DI 03
GPC 2 IPL CMD - DI 03
GPC 1 IPL CMD - DI 03
POWER
ON
OFF
MODE
IPL
RUN
HALT
STBY
PAUSE
GPC 5 IPL IND - DO 31
RUN IND - DO 09
RUN CMD - DI 02
STANDBY CMD - DI 01
HALT CMD
GPC 4 IPL IND - DO 31
GPC 3 IPL IND - DO 31
GPC 2 IPL IND - DO 31
GPC 1 IPL IND - DO 31
GPC 1 I/O ACTIVE IND - DO 07
GPC 2 I/O ACTIVE IND - DO 07
GPC 3 I/O ACTIVE IND - DO 07
GPC 4 I/O ACTIVE IND - DO 07
GPC 5 I/O ACTIVE IND - DO 07
OUTPUT
SELECT
BACKUP
NORMAL
TERMINATE
IPL SOURCE
MMU 1
MMU 2
MMU 1 IPL CMD-DI 04
MMU 2 IPL CMD-DI 05
GPC MEMORY DUMP
DPC MEMORY DUMP OFF
ANNUNCIATOR DISPLAY UNIT (ADU)
ANNUNCIATOR INTENSITY
BRIGHT
VAR
LAMP TEST
LEFT
RIGHT
LOW
MED
YELLOW
WHITE
INTENSITY CONTROL CIRCUIT
6VDC
LAMP POWER SUPPLY
GPC STATUS
FAILED GPC
VOTING GPC
XDS1
GPC 5 ADU LOGIC
GPU 4 ADU LOGIC
GPC 3 ADU LOGIC
GPC 2 ADU LOGIC
GPC 1 ADU LOGIC
LAMP TEST POWER SUPPLY
LAMP TEST
GPC FAIL 1
C/W ELECTRONICS
V72X7011E GPC 1 FAIL INDICATOR
V72X7012E GPC 2 FAIL INDICATOR
V72X7013E GPC 3 FAIL INDICATOR
V72X7014E GPC 4 FAIL INDICATOR
V72X7015E GPC 5 FAIL INDICATOR
COMPUTER INTERFACE CONDITIONING UNIT (CICU)
GPC 5 CICU LOGIC
GPC 4 CICU LOGIC
GPC 3 CICU LOGIC
GPC 2 CICU LOGIC
GPC 1 CICU LOGIC
+5VDC
LOGIC POWER SUPPLY
ESS 3AB
GPC STATUS
28VDC

DATE	NAME	VERSION
DATE= 4/05/88	NAME= CAR	VERSION= BPT=2
DATE= 4/13/88	NAME= MAG	VERSION= INK=19
DATE= 8/17/90	NAME= VSH	VERSION= INK=20

A> -TYPICAL FUNCTIONAL REPRESENTATION OF DISCRETE INPUT AND DISCRETE OUTPUT CIRCUITS. FOR DETAILS ABOUT A SPECIFIC CIRCUIT SEE RI DRAWING 70-720239

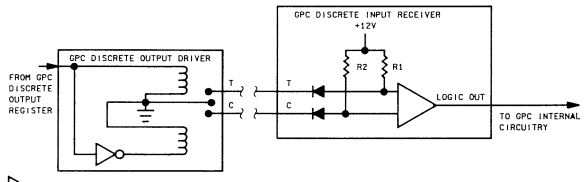

B> BCE IS THE SELF-TEST BCE IN AP101-S. IT HAS NO MEANING IN THE AD101-B

C> MDM PORT NUMBERS 1 AND 2 REFER TO THE HARDWARE PORTS NOT TO PRIMARY OR SECONDARY PORT DESIGNATIONS IN SOFTWARE

D> DISCRETES INDICATED WITH * ARE SOFTWARE RM'D. DI 20-31 ARE RM'D ONLY FOR 000 PATTERN ON GPC'S NOT IN THE CURRENT COMMON SET. DI 35-37 ARE RM'D ON DISENGAGE ONLY. CS MAJORITY IS DEFINED AS FOLLOWS:

#CS GPCS	MAJORITY
5	3
4	3
3	2
2	2
1	1

E> SCA'S ARE ATTACHED IN PAIRS. ONE SCA PER BUS, AND SHARE THE SAME BTU ADDRESS

F> FLEX MDMS MAY BE EITHER SINGULAR OR IN A FLEX PAIR. FLEX PAIR MDMS HAVE THE SAME BTU ADDRESS

G> PDI MAY BE ON EITHER PL BUS

H> EXACT CONFIGURATION IS MISSION DEPENDENT. THERE CAN BE AT MOST 4 BTU ADDRESSES (NOT INCLUDING PDI OR PL MDMS) ON A BUS WITH A COMBINED MAX OF 5 FOR BOTH PL BUSES. (X, Y AND Z MAY BE ANY OF 6, 9, 15, 29, OR 30)

J> POWER FOR 'SELF FAIL' CICU DRIVER IS PROVIDED BY SELF'S 5 VDC CONVERTER

K> DBIA 2, OSE AND SRB CHANNELS

L> DBIA 1, OSE AND SRB CHANNELS

M> A SINGLE HALT CONTACT IS POWERED FROM ONLY ONE OF THAT GPC'S 3 POWER SWITCH CONTACTS. FOR EXACT SWITCH CONFIGURATION SEE DRAWING 8.11

N> FUSE IS LOCATED IN FUSE HOLDER BEHIND PNL 06

P> I/O TERMINATE CMD B - TERMINATES FC1 THROUGH FC8
I/O TERMINATE CMD A - TERMINATES PL1, 2 AND LDB1, 2(NOT WIRED EXTERNALLY)

R> ADU LOGIC CARD OUTPUTS ARE ROUTED TO APPROPRIATE COMPUTER STATUS LIGHTS ACCORDING TO DRO OUTPUTS DEFINED IN NOTE 1

S> GPC X COMMANDS ON ICC X AND LISTENS ON THE OTHER ICC BUSES

T> DELETED

U> DRIVEN BY RESPECTIVE GPC SELF FAIL OUTPUT

V> LAMP WILL BE ILLUMINATED DURING LEFT LAMP TEST VIA POWER FROM C&W ELECTRONICS. SEE DRAWING 4.3 FOR DETAILS

W> ID SOURCE (DO 30) 5 VDC IS STRAPPED BACK INTO STATION ID BITS 0, 1 AND 2 (DI 32, 33 AND 34 RESPECTIVELY) TO ESTABLISH THE FOLLOWING GPC STATION ID'S:

GPC NO	DI (BIT) 32 (0)	33 (1)	34 (2)
1	0	0	1
2	0	1	0
3	0	1	1
4	1	0	0
5	1	0	1

X> DISCRETES ARE INPUT INTO OTHER GPC'S IN ACCORDANCE WITH NOTE 1

NOTES: 1> DISCRETE INPUT ORIGINATION AND DISCRETE OUTPUT DESTINATION GPC ASSIGNMENTS

GPC NO	DI 8	9	10	11	20	21	22	23	24	25	26	27	28	29	30	31	DRI 03	04	05	06	DRO 00	07	08	09	10
1	GPC 2	GPC 3	GPC 4	GPC 5	GPC 2	GPC 3	GPC 4	GPC 5	GPC 2	GPC 3	GPC 4	GPC 5	GPC 2	GPC 3	GPC 4	GPC 5	GPC 2	GPC 3	GPC 4	GPC 5	GPC 1	GPC 2	GPC 3	GPC 4	GPC 5
2	3	4	5	1	3	4	5	1	3	4	5	1	3	4	5	1	3	4	5	1	2	3	4	5	1
3	4	5	1	2	4	5	1	2	4	5	1	2	4	5	1	2	4	5	1	2	3	4	5	1	2
4	5	1	2	3	5	1	2	3	5	1	2	3	5	1	2	3	5	1	2	3	4	5	1	2	3
5	1	2	3	4	1	2	3	4	1	2	3	4	1	2	3	4	1	2	3	4	5	1	2	3	4

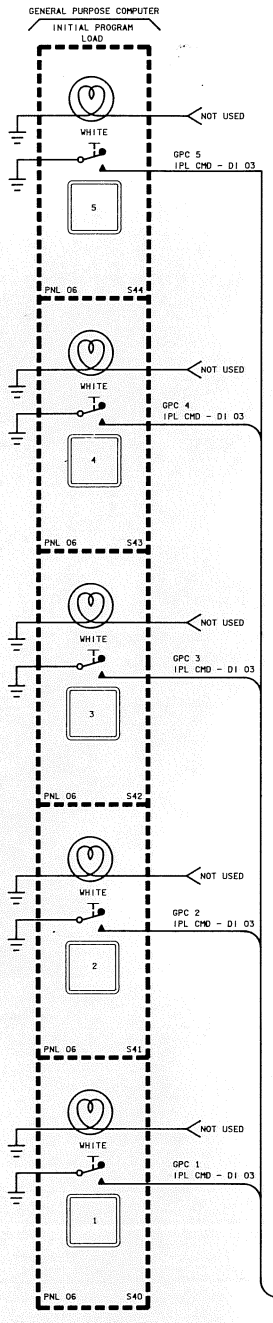

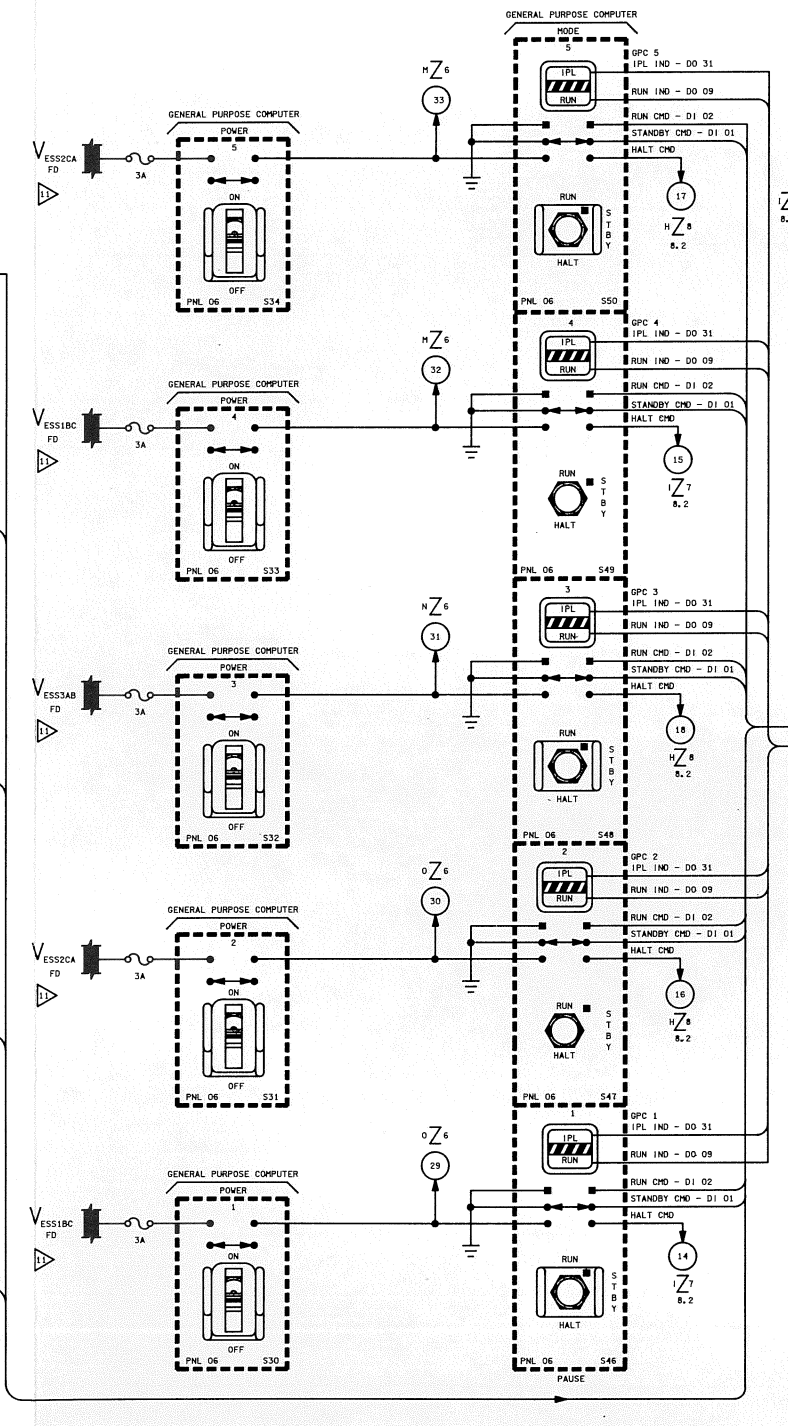

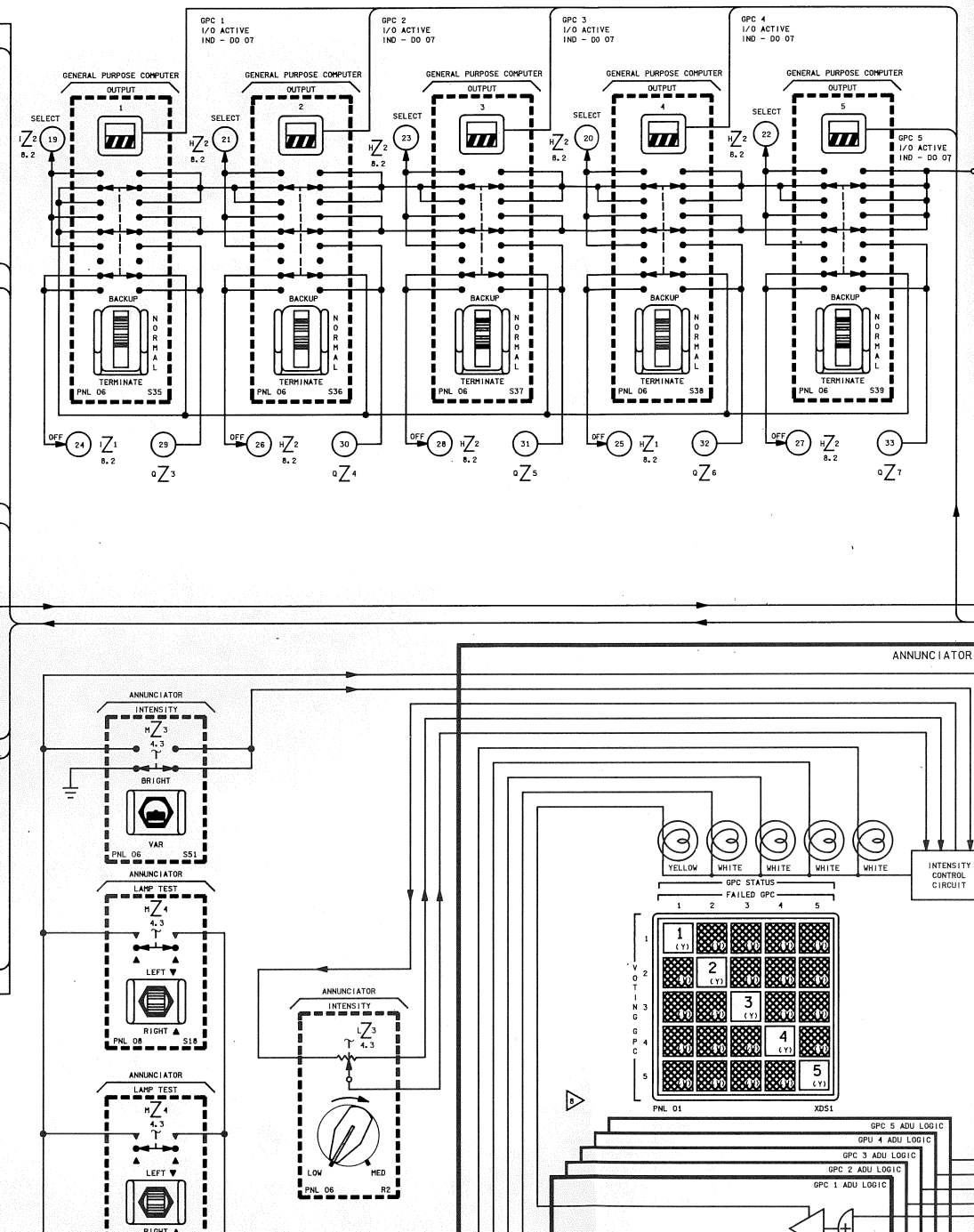

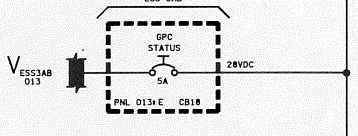

1 GPC I/O

NATIONAL AERONAUTICS AND SPACE ADMINISTRATION LYNDON B. JOHNSON SPACE CENTER HOUSTON, TEXAS		SIGNATURE	DATE
		DSGN MIKE BECKER	1/31/89
COMPUTER INPUT/OUTPUT FUNCTION		DR	
		ENGR B.F. JACKSON	
		ENGR Brent Jackson	8-23-90
		APP M.D. Conway	8/23/90
DWG NO 8.1	SPACE SHUTTLE	APP	
	ALL	OMNIPLAN	9-7-90
SHEET 1 OF 1 PAGE	126.5 X 34	LTR E PCN	

BASIC REV E

DATE: 3/5/87	NAME: MPM	VERSION: INK 3
DATE: 08/22/90	NAME: JMB	VERSION: BPT 3
DATE: 8/29/90	NAME: VSH	VERSION: INK 4

BACKUP FLIGHT CONTROLLER 3
MODULE B
MODULE A
BACKUP FLIGHT CONTROLLER 2
MODULE B
MODULE A
BACKUP FLIGHT CONTROLLER 1
MODULE B
MODULE A

BFC CRT
SELECT
1+2
2+3
3+1
PNL C3 S18

CRT 2+3 SELECTS
CRT 3+1 SELECTS
CRT 1+2 SELECTS

OPTICAL ISOLATOR

HAND CONTROLLER ENGAGE DRIVER
28VDC HCD
15 VDC 2C
15 VDC 2B
15 VDC 2A
15 VDC 1C
15 VDC 1B
15 VDC 1A

RIGHT RHC ENGAGE C
RIGHT RHC ENGAGE B
RIGHT RHC ENGAGE A
LEFT RHC ENGAGE C
LEFT RHC ENGAGE B
LEFT RHC ENGAGE A
RIGHT BFC ENGAGE A
LEFT BFC ENGAGE A
BFC DISENGAGE A
RIGHT BFC ENGAGE B
LEFT BFC ENGAGE B
BFC DISENGAGE B
RIGHT BFC ENGAGE C
LEFT BFC ENGAGE C
BFC DISENGAGE C
BFC GPC 3 SELECT
BFC GPC 5 SELECT
BFC GPC 2 SELECT
BFC GPC 4 SELECT
BFC GPC 1 SELECT
BFC GPC 3 SELECT OFF
BFC GPC 5 SELECT OFF
BFC GPC 2 SELECT OFF
BFC GPC 4 SELECT OFF
BFC GPC 1 SELECT OFF

RIGHT CONTROL LOGIC
LEFT CONTROL LOGIC
28 VDC HCD
S Q
R Q̄

DELAY FILTER

5VDC POWER SUPPLY
+5 VDC
POWER UP/DOWN LOGIC
PWR OFF RESET
PWR ON INHIBIT
PWR OFF RESET DELAYED

GPC 3 HALT
GPC 5 HALT
GPC 2 HALT
GPC 4 HALT
GPC 1 HALT

CRT SELECT A
CRT SELECT B

RIGHT BFC ENG C
RIGHT BFC ENG B
RIGHT BFC ENG A
LEFT BFC ENG C
LEFT BFC ENG B
LEFT BFC ENG A

GPC 3 ENGAGE 1
GPC 5 ENGAGE 1
GPC 2 ENGAGE 1
GPC 4 ENGAGE 1
GPC 1 ENGAGE 1
GPC 3 ENGAGE 2
GPC 5 ENGAGE 2
GPC 2 ENGAGE 2
GPC 4 ENGAGE 2
GPC 1 ENGAGE 2
GPC 3 ENGAGE 3
GPC 5 ENGAGE 3
GPC 2 ENGAGE 3
GPC 4 ENGAGE 3
GPC 1 ENGAGE 3
GPC 3 TERM B
GPC 5 TERM B
GPC 2 TERM B
GPC 4 TERM B
GPC 1 TERM B

$V_{CNTLAB3}$ $V_{CNTLCA1}$ 1A
BFC
DISENGAGE
PNL F6 S6

D EXCEPT FOR THE HCED, THE 5VDC FROM THE BFC 5VDC POWER SUPPLY IS USED TO POWER BFC LOGIC. THE HCED USES POWER FROM THE RHC

7 FLIP-FLOP TRUTH TABLE

R	S	Q	$\bar{Q}$
0	0	NC	NC
1	0	0	1
0	1	1	0
1	1	0	1

6 BFC CRT SELECT LOGIC

BFC CRT		DISCRETE LOGIC		DK BUSES SELECTED	
DISPLAY	SELECT	A (D138)	B (D139)	PRE-ENGAGED	ENGAGED
OFF	N/A	0	0	0	1 AND 2
ON	1 + 2	0	1	1*	1* AND 2
ON	2 + 3	1	0	2*	2* AND 3
ON	3 + 1	1	1	3*	3* AND 1

* DK BUS CONTROL IS RELINQUISHED IF THE IPL SOURCE SWITCH IS IN THE MMU 1 OR MMU 2 POSITION

5 BFS GPC ENGAGE LOGIC

GPC ENGAGE SW 1	GPC ENGAGE SW 2	GPC ENGAGE SW 3	GPC TERMINATE B	BFS ENGAGE
0	0	0	1	0
0	0	1	1	0
0	1	0	1	0
0	1	1	1	0
1	0	0	1	0
1	0	1	1	0
1	1	0	1	0
1	1	1	1	0
0	0	0	0	0
0	0	1	0	0
0	1	0	0	0
0	1	1	0	1*
1	0	0	0	0
1	0	1	0	1*
1	1	0	0	1*
1	1	1	0	1*

* ENGAGE LIGHTS ARE ON, DRIVEN BY BFS THROUGH MDM PF 2

4 BFC LOGIC

COCKPIT SWITCH INPUTS TO BFC		BFC INPUTS TO GPC DISCRETES	
BFC DISENGAGE AND ENGAGE SWITCHES	BACKUP/NORMAL/ TERMINATE SWITCH *	I/O TERM B DISCRETE	ENGAGE 1, 2, 3 DISCRETES
DISENGAGE	BACKUP	1	000
DISENGAGE	NORMAL	0	000
DISENGAGE	TERMINATE	1	000
ENGAGE	BACKUP	0	111
ENGAGE	NORMAL	1	111
ENGAGE	TERMINATE	1	000

* BACKUP — POSITION OUTPUTS A GPC SELECT
NORMAL — POSITION OUTPUTS A GPC SELECT OFF IF NONE OF THE 5 SWITCHES ARE IN THE BACKUP POSITION
TERMINATE — POSITION OUTPUTS A GPC SELECT, AND GPC SELECT OFF

3 THE HALT DISCRETES ARE ROUTED THROUGH THE BFC TO DECREASE THE LENGTH OF WIRE TO THE GPC AND THE SUSCEPTIBILITY TO EMI

2 ALL 5 SIGNALS ARE IMPLEMENTED WITH TWO WIRE, TRUE/COMPLEMENT LOGIC. (REF DRAWING 8.1)

NOTES:
1 PWR ON INHIBIT LATCHED TO 1, 42 MILLISECONDS AFTER POWER ON. PWR OFF RESET IS 1 WHEN 5 VOLT PWR IS GT 6.4VDC OR LT 4.5VDC, OR 28 VOLT PWR IS LT 22VDC FOR 402 MICROSECONDS AND PWR ON INHIBIT IS 1. PWR OFF RESET DELAYED LATCHED TO 0 IF PWR OFF RESET IS 1 FOR 2.5 MILLISECONDS

2 BFC

SIGNATURE		DATE	
DSGN	LINDA DUMIS	1/16/79	NATIONAL AERONAUTICS AND SPACE ADMINISTRATION LYNDON B. JOHNSON SPACE CENTER HOUSTON, TEXAS
DR			
ENGR	JAMES B. HILL		BACKUP FLIGHT CONTROLLER
ENGR		9/24/90	
APP	M.D. Thompson	9/24/90	
APP			SPACE SHUTTLE
OMNIPLAN	S.K. Hinkle	9-9-90	ALL
LTR E	PCN		66 X 34

DWG NO 8.2
PAGE SHEET 1 OF 1

BASIC REV E

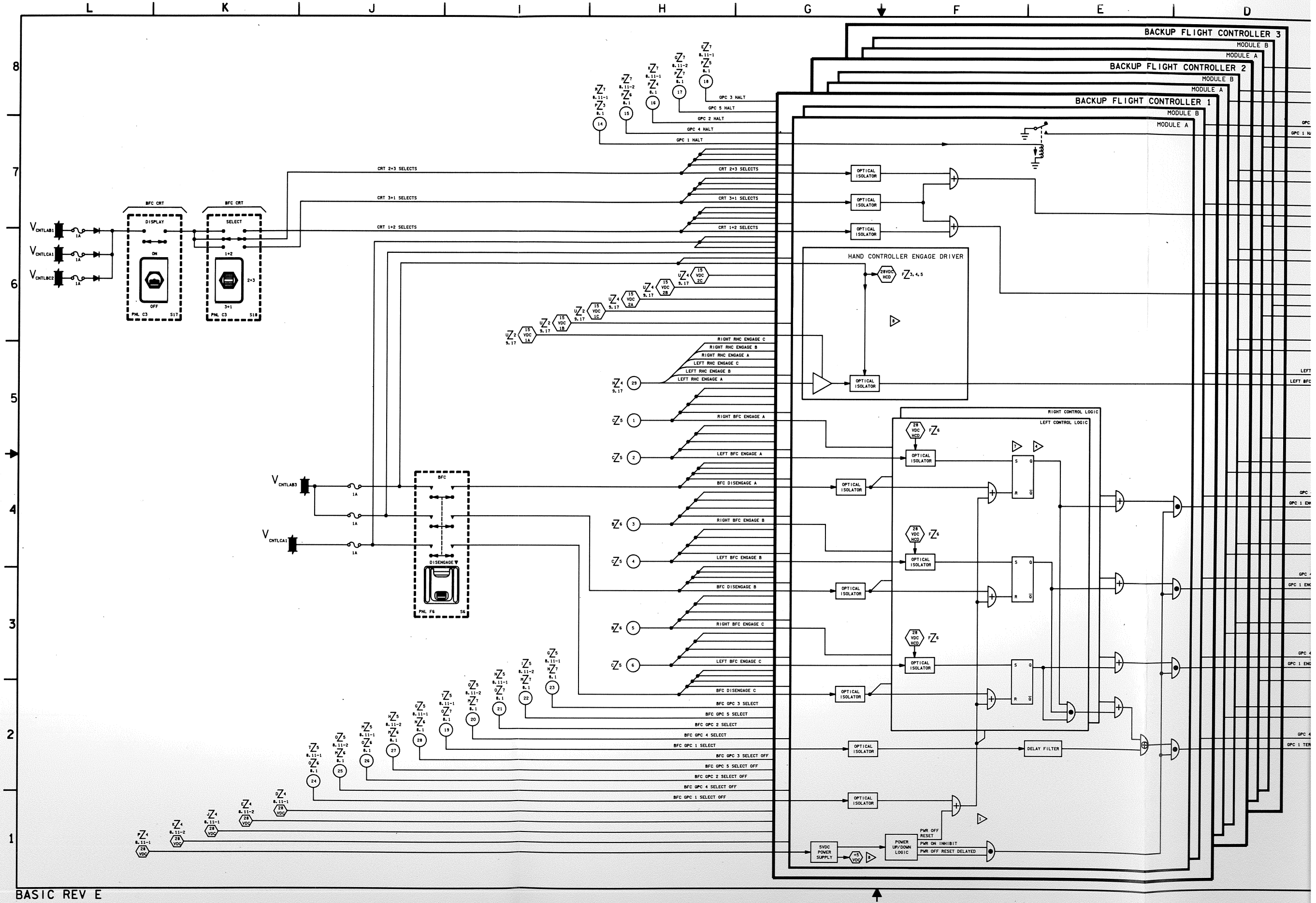
BACKUP FLIGHT CONTROLLER 3
MODULE B
MODULE A
BACKUP FLIGHT CONTROLLER 2
MODULE B
MODULE A
BACKUP FLIGHT CONTROLLER 1
MODULE B
MODULE A
GPC 3 HALT
GPC 5 HALT
GPC 2 HALT
GPC 4 HALT
GPC 1 HALT
CRT 2+3 SELECTS
CRT 3+1 SELECTS
CRT 1+2 SELECTS
BFC CRT
DISPLAY
ON
OFF
PML C3 S17
BFC CRT
SELECT
1+2
2+3
3+1
PML C3 S18
VCNTLAB1
VCNTLCA1
VCNTLBC1
1A
OPTICAL ISOLATOR
HAND CONTROLLER ENGAGE DRIVER
28VDC HCD
15 VDC 1A
15 VDC 1B
15 VDC 1C
15 VDC 2A
15 VDC 2B
15 VDC 2C
RIGHT RHC ENGAGE C
RIGHT RHC ENGAGE B
RIGHT RHC ENGAGE A
LEFT RHC ENGAGE C
LEFT RHC ENGAGE B
LEFT RHC ENGAGE A
RIGHT BFC ENGAGE A
LEFT BFC ENGAGE A
BFC DISENGAGE A
RIGHT BFC ENGAGE B
LEFT BFC ENGAGE B
BFC DISENGAGE B
RIGHT BFC ENGAGE C
LEFT BFC ENGAGE C
BFC DISENGAGE C
BFC
DISENGAGE
PML F6 S6
VCNTLAB3
VCNTLCA1
BFC GPC 3 SELECT
BFC GPC 5 SELECT
BFC GPC 2 SELECT
BFC GPC 4 SELECT
BFC GPC 1 SELECT
BFC GPC 3 SELECT OFF
BFC GPC 5 SELECT OFF
BFC GPC 2 SELECT OFF
BFC GPC 4 SELECT OFF
BFC GPC 1 SELECT OFF
28 VDC
RIGHT CONTROL LOGIC
LEFT CONTROL LOGIC
S Q
R Q
DELAY FILTER
5VDC POWER SUPPLY
+5 VDC
POWER UP/DOWN LOGIC
PWR OFF RESET
PWR ON INHIBIT
PWR OFF RESET DELAYED
GPC
GPC 1 EN
LEFT
LEFT BFC
GPC 1 TEN
BASIC REV E

DATE▸ 08/18/87	NAME▸ VCO	VERSION▸ INK▸ 2
DATE▸ 09/22/87	NAME▸ MDU	VERSION▸ INK▸ 3
DATE▸ 8/17/90	NAME▸ VSH	VERSION▸ INK▸ 4

1. THIS BLOCK DIAGRAM IS INDEXED TO THE PRODUCTION AUTOMATED LOGIC DIAGRAMS (ALD'S) VIA THE FIVE-CHARACTER CODES (ALD PAGE NUMBERS) THAT APPEAR THROUGHOUT THE DIAGRAM
2. DELETED
3. DELETED
4. TIMER AND VOTER LATCHES ARE PERMANENTLY INHIBITED BY CURRENT FLIGHT SOFTWARE
5. DELETED
6. THIS +5 VOLTS IS USED TO DRIVE THE LOGIC CIRCUITS IN THE POWER SUPPLIES
7. BCE STATUS REGISTER (HI AND LO)

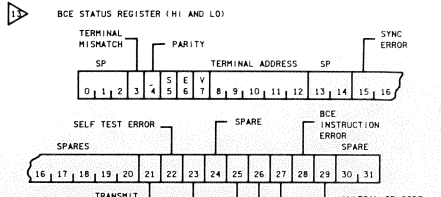

8. MSC STATUS REGISTER

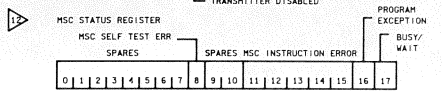

9. FOR INPUT ORIGINATION AND OUTPUT DESTINATION SEE DRAWING 8.1 NOTE 1
10. THE 44 DISCRETE-INPUT CIRCUITS ARE GROUPED IN SETS OF 4. EACH SET HAS A COMMON 5VDC, 12VDC POWER LINE AND A COMMON GROUND. THE DI'S ARE CONTROLLED BY DISCRETE OUTPUT CIRCUITS, SWITCHES, OR DISCRETES FROM LRU'S. FOR DETAILS OF THE DISCRETE RECEIVER AND DRIVER SEE ROCKWELL DRAWING VSTO-720229 ZONE C-24
11. THE OUTPUT OF DO 30 IS PERMANENTLY SET TO A 1 AND THEN CONNECTED TO DI'S 32, 33,34 IN A SPECIFIC PATTERN (SEE NOTE 3, DWG 8.1 FOR PATTERN DEFINITION). OTHER DO'S ARE CONTROLLED BY HARDWARE OR SOFTWARE
12. THE DIRECT MEMORY ACCESS (DMA) PROVIDES A BUFFER AREA FOR COMMUNICATION WITH MAIN MEMORY VIA CHANNEL CONTROL AND IS UNDER CONTROL OF THE MSC AND BCE'S VIA THE MICROPROGRAM LOGIC. IT OPERATES IN TWO MODES: READ, AND WRITE. THE WRITE MODE INVOLVES NO FEEDBACK TO LOCAL STORE. THE READ MODE DOES INVOLVE FEEDBACK TO LOCAL STORE (SO THAT THE DATA GOES TO THE CORRECT LOCATION)
13. THIS FLOW PERFORMS TWO DISTINCT FUNCTIONS. IT PROVIDES A MEANS OF SENDING DATA TO THE MAIN MEMORY, TO PERIPHERAL EQUIPMENT (VIA MIA'S), OR TO LOCAL STORE. THE OTHER FUNCTION IS TO PROVIDE LOGIC PROCESSING REGISTERS FOR THE MSC AND BCE PROCESSORS
14. THESE VOTES ARE OUTPUT WHEN THE MASTER SEQUENCE CONTROLLER (MSC) EXECUTES THE FCMSVOTE PROGRAM. FCOS (VIA THE FCM FDI MODULE) DIRECTS THE MSC TO EXECUTE FCMSVOTE WHEN IT DETERMINES THAT ANOTHER COMPUTER IN ITS REDUNDANT SET IS FAILED
15. THIS INPUT IS FURNISHED BY IPL FIRMWARE WHEN LOADING AND CHECKING OF THE BOOTSTRAP LOADER IS COMPLETE AND NO ERRORS WERE DETECTED. THIS FIRMWARE IS PART OF THE MICROSTORE AND TIMING ROS MICROPROGRAM
16. DELETED
17. DI 12 (I/O TERM A) IS NOT CONNECTED EXTERNALLY, INTERNALLY IT IS CONNECTED SO THAT IT WILL DISABLE TX'S 10-13
18. MASTER/POWER RESET SELECTIVE BY RESETS ONLY. ROS PARITY ERROR AND IOP TIMING FAULT IN INTERRUPT A

NOTES▸ 1. 1 OF 5

3 I/O PROC 1

SIGNATURE		DATE	NATIONAL AERONAUTICS AND SPACE ADMINISTRATION LYNDON B. JOHNSON SPACE CENTER HOUSTON, TEXAS
DSGN		6/17/78	
DR K CHARLSON		2-27-79	INPUT/OUTPUT PROCESSOR
ENGR B.F. JACKSON			
ENGR		8-23-80	
APP		8/23/90	
APP			SPACE SHUTTLE / DWG NO 8.3
OMNIPLAN		9-1-80	ALL
LTR E	PCN		126.5 X 34 / PAGE / SHEET 1 OF 1

BASIC REV E

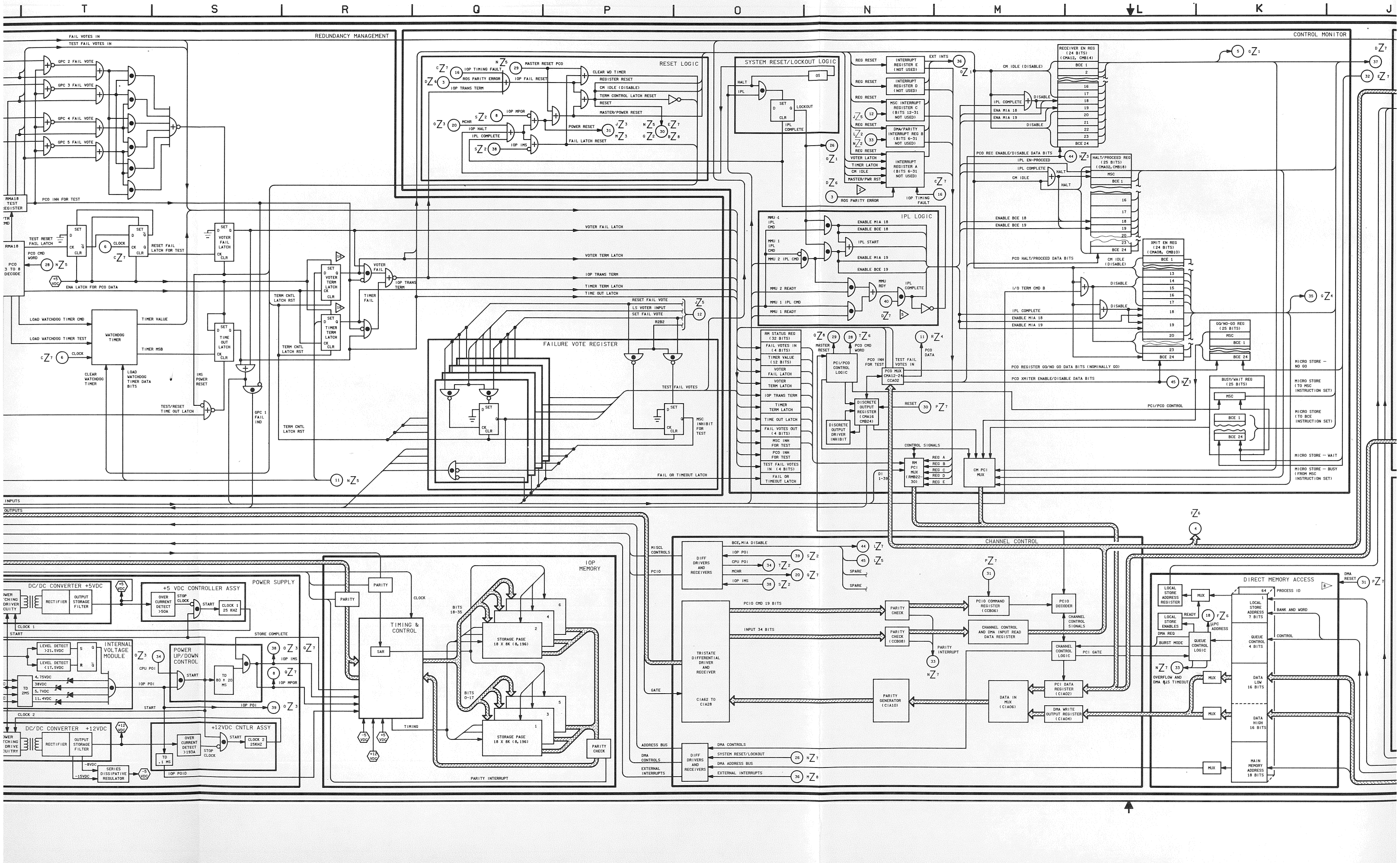

T
S
R
Q
P
O
N
M
L
K
J
REDUNDANCY MANAGEMENT
CONTROL MONITOR
RESET LOGIC
SYSTEM RESET/LOCKOUT LOGIC
IPL LOGIC
FAILURE VOTE REGISTER
CHANNEL CONTROL
DIRECT MEMORY ACCESS
POWER SUPPLY
IOP MEMORY
DC/DC CONVERTER +5VDC
+5 VDC CONTROLLER ASSY
INTERNAL VOLTAGE MODULE
POWER UP/DOWN CONTROL
DC/DC CONVERTER +12VDC
+12VDC CNTLR ASSY
TIMING & CONTROL
STORAGE PAGE 18 X 8K (8,196)
DIFF DRIVERS AND RECEIVERS
TRISTATE DIFFERENTIAL DRIVER AND RECEIVER
CIA62 TO CIA28
PARITY CHECK
PCIO COMMAND REGISTER (CCB06)
CHANNEL CONTROL AND DMA INPUT READ DATA REGISTER
PCIO DECODER
CHANNEL CONTROL LOGIC
PCI DATA REGISTER (CIA02)
DMA WRITE OUTPUT REGISTER (CIA04)
DATA IN MUX (CIA06)
PARITY GENERATOR (CIA10)
QUEUE CONTROL LOGIC
LOCAL STORE ADDRESS REGISTER
LOCAL STORE ENABLES
LOCAL STORE ADDRESS 7 BITS
QUEUE CONTROL 4 BITS
DATA LOW 16 BITS
DATA HIGH 16 BITS
MAIN MEMORY ADDRESS 18 BITS
PROCESS ID
BANK AND WORD
CONTROL
MICRO STORE — NO GO
MICRO STORE (TO MSC INSTRUCTION SET)
MICRO STORE (TO BCE INSTRUCTION SET)
MICRO STORE — WAIT
MICRO STORE — BUSY (FROM MSC INSTRUCTION SET)
PCI/PCO CONTROL
PCO REGISTER GO/NO GO DATA BITS (NOMINALLY GO)
PCO XMITER ENABLE/DISABLE DATA BITS
PCO REC ENABLE/DISABLE DATA BITS
PCO HALT/PROCEED DATA BITS
I/O TERM CMD B
CM IDLE (DISABLE)
ENABLE BCE 18
ENABLE BCE 19
ENABLE MIA 18
ENABLE MIA 19
IPL COMPLETE
IPL START
IPL EN-PROCEED
RECEIVER EN REG (24 BITS) (CMA12, CMB14)
HALT/PROCEED REG (25 BITS) (CMA02, CMB18)
XMIT EN REG (24 BITS) (CMA08, CMB10)
GO/NO-GO REG (25 BITS)
BUSY/WAIT REG (25 BITS)
INTERRUPT REGISTER E (NOT USED)
INTERRUPT REGISTER D (NOT USED)
MSC INTERRUPT REGISTER C (BITS 12-31 NOT USED)
DMA/PARITY INTERRUPT REG B (BITS 6-31 NOT USED)
INTERRUPT REGISTER A (BITS 6-31 NOT USED)
RM STATUS REG (32 BITS)
FAIL VOTES IN (4 BITS)
TIMER VALUE (12 BITS)
VOTER FAIL LATCH
VOTER TERM LATCH
IOP TRANS TERM
TIMER TERM LATCH
TIME OUT LATCH
FAIL VOTES OUT (4 BITS)
MSC INH FOR TEST
PCO INH FOR TEST
TEST FAIL VOTES IN (4 BITS)
FAIL OR TIMEOUT LATCH
PCI/PCO CONTROL LOGIC
DISCRETE OUTPUT REGISTER (CMA16 CMB24)
DISCRETE OUTPUT DRIVER INHIBIT
PCO MUX CMA12-24 CCA02
RM PCI MUX (RMB22-30)
CM PCI MUX
CONTROL SIGNALS
WATCHDOG TIMER
TIMER VALUE
TIMER MSB
LOAD WATCHDOG TIMER CMD
LOAD WATCHDOG TIMER TEST
CLEAR WATCHDOG TIMER
LOAD WATCHDOG TIMER DATA BITS
TEST/RESET TIME OUT LATCH
IMS POWER RESET
GPC 1 FAIL IND
TERM CNTL LATCH RST
VOTER FAIL LATCH
VOTER TERM LATCH
IOP TRANS TERM
TIMER TERM LATCH
TIME OUT LATCH
RESET FAIL VOTE
LS VOTER INPUT
SET FAIL VOTE
TEST FAIL VOTES
MSC INHIBIT FOR TEST
FAIL OR TIMEOUT LATCH
INPUTS
OUTPUTS
MISCL CONTROLS
PCIO
GATE
ADDRESS BUS
DMA CONTROLS
EXTERNAL INTERRUPTS
PARITY INTERRUPT
PCIO CMD 19 BITS
INPUT 34 BITS
BCE, MIA DISABLE
IOP POI
CPU POI
MCHR
IOP IMS
SPARE
DMA CONTROLS
SYSTEM RESET/LOCKOUT
DMA ADDRESS BUS
EXTERNAL INTERRUPTS

DATE: 8/17/90 | NAME: VSH | VERSION: INH=4

REDUNDANCY MANAGEMENT

DISCRETE INPUTS RM
DRI 03 GPC 2 FAIL VOTE
DRI 04 GPC 3 FAIL VOTE
DRI 05 GPC 4 FAIL VOTE
DRI 06 GPC 5 FAIL VOTE
DISCRETE INPUTS NON-RM
DI 03 IPL CMD
DI 04 MMU 1 IPL CMD
DI 05 MMU 2 IPL CMD
DI 07 MMU 2 READY
OTHER DRI'S
DI 06 MMU 1 READY
DI 02 RUN CMD
DI 01 STANDBY CMD
DI 00 HALT CMD
DISCRETE OUTPUTS RM
DRO 07 GPC 2 FAIL IND
DRO 08 GPC 3 FAIL IND
DRO 09 GPC 4 FAIL IND
DRO 10 GPC 5 FAIL IND
DRO 00 GPC 1 FAIL IND
OTHER DRO'S
DI 13 I/O TERM CMD B
OTHER DO'S
DI 12 SPARE (I/O TERM A1)
MISCL CONTROLS
PCIO
EXTERNAL DATA BUS (TO/FROM CPU)
ADDRESS BUS
DMA CONTROLS
EXTERNAL INTERRUPTS
ADDRESS BUS (TO IOP MEMORY)
IOP MEMORY BUS (AUXILLARY DATA BUS)
CLOCK & INTERRUPTS
DISCRETE INPUTS
DISCRETE OUTPUTS

FAIL VOTES IN
TEST FAIL VOTES IN
GPC 2 FAIL VOTE
GPC 3 FAIL VOTE
GPC 4 FAIL VOTE
GPC 5 FAIL VOTE
TEST LOAD
RMA18 TEST REGISTER
PCO INH FOR TEST
LOAD VTR TEST CMD WORD
RMA18
PCO 3 TO 8 DECODE
TEST RESET FAIL LATCH
PCO CMD WORD
CLOCK
RESET FAIL LATCH FOR TEST
ENA LATCH FOR PCO DATA
LOAD WATCHDOG TIMER CMD
LOAD WATCHDOG TIMER TEST
WATCHDOG TIMER
TIMER VALUE
TIMER MSB
CLEAR WATCHDOG TIMER
LOAD WATCHDOG TIMER DATA BITS
TEST/RESET TIME OUT LATCH
IMS POWER RESET
GPC 1 FAIL IND
VOTER FAIL LATCH
TIME OUT LATCH
TERM CNTL LATCH RST
VOTER TERM LATCH
TIMER TERM LATCH
VOTER FAIL
IOP TRANS TERM
TIMER FAIL
VOTER FAIL LATCH
VOTER TERM LATCH
IOP TRANS TERM
TIMER TERM LATCH
TIME OUT LATCH

RESET LOGIC
IOP TIMING FAULT
ROS PARITY ERROR
IOP TRANS TERM
MASTER RESET PCO
IOP FAIL RESET
IOP MPOR
MCHR
IOP HALT
IPL COMPLETE
IOP IMS
CLEAR WD TIMER
REGISTER RESET
CM IDLE (DISABLE)
TERM CONTROL LATCH RESET
RESET
MASTER/POWER RESET
POWER RESET
FAIL LATCH RESET

SYSTEM RESET/LOCKOUT LOGIC
HALT
IPL
SET
LOCKOUT
CLR
IPL COMPLETE
REG RESET
VOTER LATCH
TIMER LATCH
CM IDLE
MASTER/PWR RST
ROS PARITY ERROR
INTERRUPT REGISTER (NOT USED)
MSC INTERRUPT REGISTER (BITS 12-15 NOT USED)
DMA/PARITY INTERRUPT REGISTER (BITS 6-3 NOT USED)
INTERRUPT REGISTER (BITS 6-3 NOT USED)

IPL
MMU 1 IPL CMD
MMU 2 IPL CMD
MMU 2 READY
MMU 1 IPL CMD
MMU 1 READY
ENABLE MIA 18
ENABLE BCE 18
IPL START
ENABLE MIA 19
ENABLE BCE 19
MMU RDY
IPL COMP

FAILURE VOTE REGISTER
RESET FAIL VOTE
LS VOTER INPUT
SET FAIL VOTE
R2B2
TEST FAIL VOTES
MSC INHIBIT FOR TEST
FAIL OR TIMEOUT LATCH

RM STATUS REG (32 BITS)
FAIL VOTES IN (4 BITS)
TIMER VALUE (12 BITS)
VOTER FAIL LATCH
VOTER TERM LATCH
IOP TRANS TERM
TIMER TERM LATCH
TIME OUT LATCH
FAIL VOTES OUT (4 BITS)
MSC INH FOR TEST
PCO INH FOR TEST
TEST FAIL VOTES IN (4 BITS)
FAIL OR TIMEOUT LATCH
MASTER RESET
PCO CMD WORD
PCI/PCO CONTROL LOGIC
PCO INH FOR TEST
PCO MUX CMA12-24 CCA02
DISCRETE OUTPUT REGISTER (CMA16 CMB24)
DISCRETE OUTPUT DRIVER INHIBIT
TEST FAIL VOTES IN
RESE
CONTI
DI 1-30

POWER SUPPLY
28 VDC
EMI FILTER
INPUT STORAGE FILTER
POWER SWITCHING AND DRIVER CIRCUITRY
RECTIFIER
OUTPUT STORAGE FILTER
DC/DC CONVERTER +5VDC
+5 VDC CONTROLLER ASSY
OVER CURRENT DETECT >50A
STOP CLOCK
START
CLOCK 1 25 KHZ
CLOCK 1
START
STORE COMPLETE
INTERNAL VOLTAGE MODULE
LEVEL DETECT >21.5VDC
LEVEL DETECT <17.5VDC
INTERNAL VOLTAGE SUPPLY
+40VDC
+6VDC
+12VDC
TD 2MS
4.75VDC
38VDC
5.7VDC
11.4VDC
POWER UP/DOWN CONTROL
CPU POI
IOP POI
TD 80 ± 20 MS
IOP IMS
IOP MPOR
CLOCK 2
DC/DC CONVERTER +12VDC
+12VDC CNTLR ASSY
OVER CURRENT DETECT >193A
CLOCK 2 25KHZ
TD .1 MS
IOP POID
SERIES DISSIPATIVE REGULATOR
-8VDC
-15VDC

IOP MEMORY
PARITY
CLOCK
TIMING & CONTROL
SAR
TIMING
BITS 18-35
BITS 0-17
STORAGE PAGE 18 X 8K (8,196)
PARITY CHECK
PARITY INTERRUPT

MISCL CONTROLS
PCIO
ADDRESS BUS
DMA CONTROLS
EXTERNAL INTERRUPTS
DIFF DRIVERS AND RECEIVERS
BCE,MIA DISABLE
IOP POI
CPU POI
MCHR
IOP IMS
SPARE
PCIO CMD 19 BITS
INPUT 34 BITS
TRISTATE DIFFERENTIAL DRIVER AND RECEIVER
CIA62 TO CIA28
GATE
PARITY GENERATOR (C1A10)
PARITY CHECK
PARITY CHECK (CCB08)
SYSTEM RESET/LOCKOUT
DMA ADDRESS BUS

BASIC REV E

DATE	NAME	VERSION	INC
DATE= 08/18/87	NAME= CAR	VERSION=	INC= 1
DATE= 09/10/87	NAME= MDU	VERSION=	INC= 2
DATE= 8/15/90	NAME= VSH	VERSION=	INC= 3

CENTRAL PROCESSING UNIT (CPU)

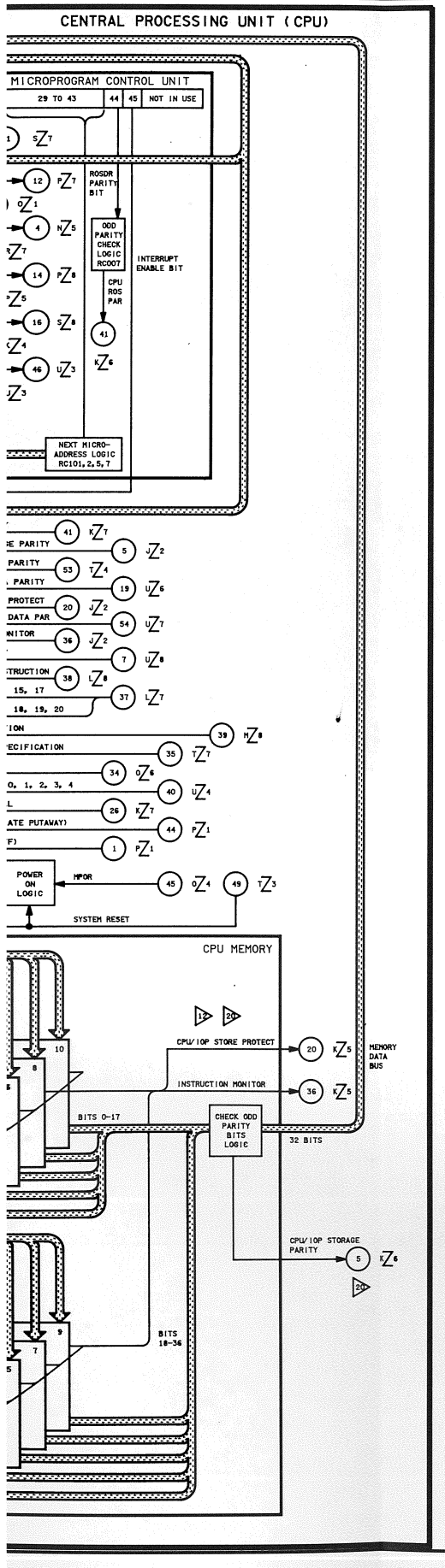

PROGRAM STATUS WORD (PSW) 1D

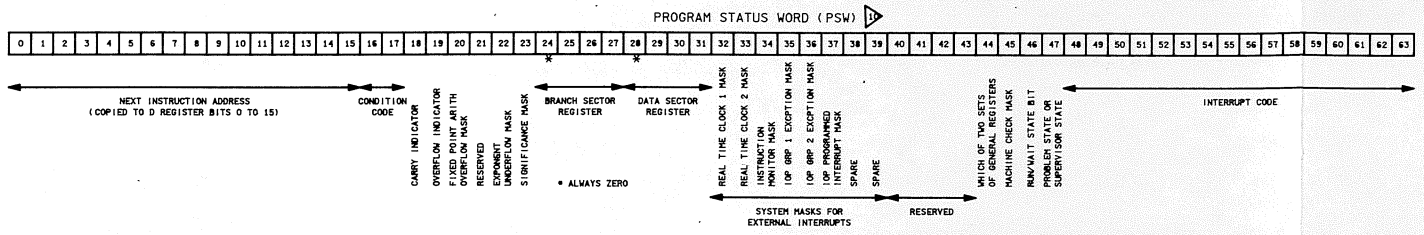

INSTRUCTION STORAGE IN CPU REGISTER

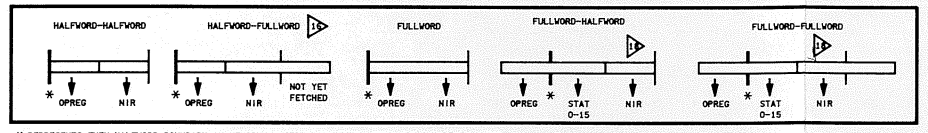

* REPRESENTS EVEN HALFWORD BOUNDARY IN MEMORY. INSTRUCTION FETCH INVOLVES ENTIRE FULLWORD.

CPU INTERRUPTS

NO	HARDWARE PRIORITY	INTERRUPT NAME	TYPE	CURRENT PSW MASK BIT	PENDING IF MASKED	INTERRUPT CODE (HEX)	RECOVERY INSTRUCTION	WHEN ACCEPTED	SOFTWARE HALT	ZONE	NO
POWER CLASS											
1	1	POWER ON (CPU NOT IN HALT)	1	NONE	N/A	N/A	NONE	1	YES	P2	1
2	1	SYSTEM RESET (CPU IN HALT)	1				NONE	1	N/A	T3	2
3	1	POWER OFF (POID)	1				NONE	6	N/A	Q1	3
22	12	INITIATE PUTAWAY (POI)	2				NEXT	6	YES	Q2	22
CPU BITE (MACHINE CHECK) CLASS											
4	2	CPU STORAGE DATA PARITY *	1	45	NO	0003	IMPRECISE	2	YES	U2	4
5	3	IOP STORAGE DATA PARITY *	1			0002		2			5
6	4	EXTENDED STORAGE ADDRESS PARITY *	1			0001		2		T4	6
7	5	EXTENDED STORAGE DATA PARITY *	1			0004		2		U6	7
10	8	CPU ROS PARITY *	1			0005		1		K7	10
MICROPROGRAM CLASS											
8	6	CPU ADDRESS SPECIFICATION	1	NONE	NO	0003	IMPRECISE	1	NO	T7	8
9	7	CPU STORE PROTECT VIOLATION *	1	NONE		0007		2		J4	9
11	9	INSTRUCTION MONITOR	1	34		N/A		4		J4	11
12	10	ILLEGAL OPERATION	3	NONE		0000		4		M8	12
13	10	PRIVILEGED INSTRUCTION	3	NONE		0001		3		M8	13
14	10	FIXED POINT OVERFLOW	3	20		0004					14
15	10	SIGNIFICANCE	3	23		0005					15
16	10	EXPONENT UNDERFLOW (FLOATING)	3	22		0009	NEXT	5		LT	16
17	10	EXPONENT OVERFLOW (CONVERT)	3	NONE		0008					17
18	10	EXPONENT OVERFLOW (FLOATING)	3	NONE		000B					18
19	10	DIVIDE (FLOATING)	3	NONE		000C					19
20	10	UNNORMALIZED INPUTS	3	NONE		0006					20
SUPERVISOR AND SYSTEM CLASS											
21	11	EXECUTIVE (SUPERVISOR CALL)	3	NONE	N/A	N/A	NEXT	3	NO	K7	21
23	13	COUNTER 1	2	32		N/A				O6	23
24	14	COUNTER 2	2	33		N/A				O6	24
25	15	EXTERNAL 0	2	35		N/A				U4	25
26	16	EXTERNAL 1	2	36		N/A				U4	26
27	16	I/O ADDRESS SPECIFICATION	4	45	YES	0003	NEXT	6	YES	T7	27
28	16	I/O STORE PROTECT VIOLATION	4			0004				J4	28
29	16	I/O WRITE PARITY	4			0002				U7	29
30	16	PCI DATA PARITY	4			0001				U7	30
31	16	I/O ADDRESS PARITY	4			0005				U8	31
32	16	AGE INTERRUPT	2	36		0006					32
33	17	EXTERNAL 2	2	37		N/A	NEXT		NO	U4	33
34	18	EXTERNAL 3	2	38		N/A			NO		34
35	19	EXTERNAL 4	2	39		N/A			NO		35

TYPE: 1 MICRO INTERRUPT IN HARDWARE
2 MACRO INTERRUPT IN HARDWARE
3 MICRO PROGRAMMED INTERRUPT
4 IOP INTERRUPTS DETECTED BY CPU

* THESE INTERRUPTS MUST BE ENABLED BY SETTING ROSDR BIT 45 = 1. THEY CAN STILL BE MASKED

WHEN ACCEPTED
1 IMMEDIATELY
2 END OF MEMORY CYCLE
3 DURING ADDRESS GENERATION
4 DURING INSTRUCTION FETCH
5 DURING INSTRUCTION EXECUTION
6 AT END OF INSTRUCTION

STATUS REGISTER

00	A REG SIGN BIT	
01		
02	EXPONENT COUNTER	USED FOR HANDLING THE CHARACTERISTIC IN FLOATING POINT OPERATIONS. STATUS REG 24 IS THE HIGH BIT OF THIS COUNTER AND IS USED TO DETECT CHARACTERISTIC OVERFLOWS (OF) AND UNDERFLOWS (UF)
03		
04		
05		
06		
07	ITERATION COUNTER	USED BY MICRO-CODE TO PERFORM MICRO BRANCH ON COUNT OPERATIONS
08		
09		
10		
11		
12	SPILL STATUS BITS	USED BY SHIFT MICRO OPERATIONS TO PRODUCE TEMPORARY STORAGE FOR SPILLED BITS
13		
14		
15		
16	ENABLES STORE PROTECT LOGIC WHEN A ONE	
17	STORE PROTECT BIT GENERATOR (ONLY IF ENABLED BY STAT 16)	
18	PERFORMING DETECT MICRO ROUTINE WHEN A ONE	
19	ALWAYS A ZERO	
20	INTERRUPT IN PROGRESS (USED BY INTERRUPT HANDLING MICRO ROUTINES)	
21	SYSTEM RESET REGISTER	
22	FAILURE INDICATOR REGISTER	
23	RESERVED FOR I/O OPERATIONS (NOT USED)	
24	EXPONENT OF/UF REGISTER (SEE DESCRIPTION UNDER STATS 1-7)	
25	B REGISTER SIGN	
26	ALU OUTPUT SIGN	
27	ALU OUTPUT 32-BIT ZERO DETECT	
28	FIXED POINT OVERFLOW REGISTER	
29	FIXED POINT CARRY REGISTER	
30	GENERAL USAGE FOR MICRO PROGRAMMER	
31		

MNEMONIC	DESCRIPTION
ADV	ADVANCE-INDICATION TO CODE DSR IS LOADED
ALU	ARITHMETIC AND LOGIC UNIT
BUSY	MEMORY CYCLE IN PROGRESS
CLEAR	CLEARS STORAGE DATA REGISTER
CTR 1	COUNTER 1
CTR 2	COUNTER 2
DMA	DIRECT MEMORY ACCESS
HDLC	HIGH DATA LOAD CLOCK
IMS	INITIAL MAIN STORE
LDLC	LOW DATA LOAD CLOCK
MBCU	MASTER BUS CONTROL UNIT
MPOR	MASTER POWER ON RESET
NIR	NEXT INSTRUCTION REGISTER
OPREG	OPERATION REGISTER
POH	POWER ON-HIGH
POI	POWER ON/OFF INTERRUPT
POID	POWER OFF INTERRUPT-DELAYED
POL	POWER ON-LOW
PREG	PROGRAM REGISTER
PROM	PROGRAMMABLE READ-ONLY MEMORY
PSW	PROGRAM STATUS WORD
READ/WRITE	DETERMINES TYPE OF OPERATION
ROS	READ ONLY STORE
ROSAR	ROS ADDRESS REGISTER
ROSBR	ROS BACKUP REGISTER
ROSDR	ROS DATA REGISTER
SAR	STORAGE ADDRESS REGISTER
SC	STORE COMPLETE
STAT	STATUS REGISTER
STROBE	SIGNAL TO READ SENSE AMPLIFIER
X-TIMING	TIMING PULSES FOR X-DIMENSION
Y-TIMING	TIMING PULSES FOR Y-DIMENSION

TYPICAL STORAGE PAGE (1 OF 10)

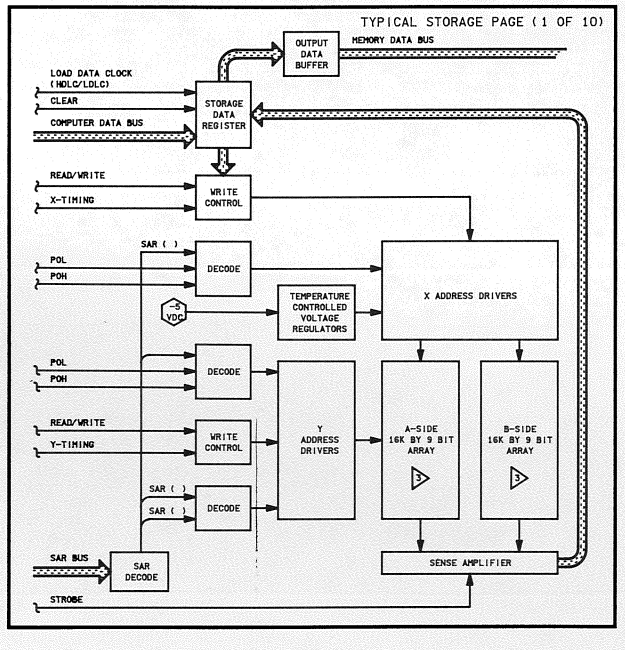

MEMORY SECTOR POWER STATUS

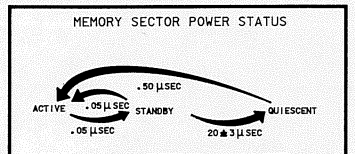

CURRENT ACCESSIBLE SECTOR	ALL SECTORS ADDRESSED WITHIN 20 ≙ 3 µSEC	ALL OTHER SECTORS
50.8 WATTS	19.2 WATTS/SECTOR	2.4 WATTS/SECTOR

(PLUS 5.9 WATTS FOR ONE TIMING PAGE)

SAR BIT DEFINITIONS	
M2	64K BOUNDARY
M1	32K BOUNDARY
0	16K BOUNDARY
ADDRESS SELECTION	
2, 3, 5, 6, 12, 14	X
1, 4, 7, 8, 9, 10, 11, 13	Y
15	HALFWORD SELECTION
C0	HW/FW MODE SEL

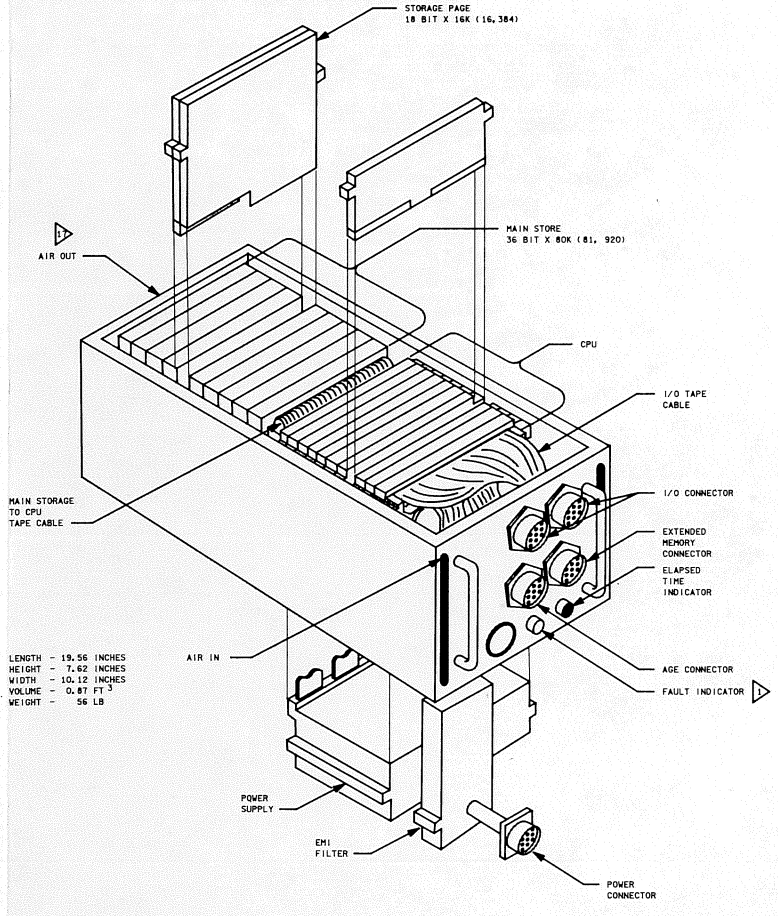

1D THIS BLOCK DIAGRAM IS INDEXED TO THE PRODUCTION ALD'S VIA THE CODES (ALD PAGE NUMBERS) THAT APPEAR THROUGHOUT THE DIAGRAM

2D THE INTERRUPT HANDLING MICRODE WILL DIFFERENTITATE BETWEEN INTERRUPTS SET OFF BY CPU OR IOP OPERATIONS

3E ADDRESS MUST BE LESS THAN OR EQUAL TO 33FFF HEX

4E AS IMPLEMENTED IN CURRENT FLIGHT SOFTWARE, THIS INSTRUCTION IS ALWAYS A NO-OP

5D CPU WILL OPERATE DOWN TO 8 PSI AND/OR ONE FAN FAILURE. LOSS OF CABIN PRESSURE OR BOTH FANS WILL INCAPACITATE OPERATING CPU AFTER ABOUT THIRTY MINUTES

6E CPU WILL "PIPELINE" TWO HALFWORD INSTRUCTIONS (THE "LOOK AHEAD" FEATURE), THUS SAVING 400 NANOSECONDS

7E AS IMPLEMENTED IN CURRENT FLIGHT SOFTWARE DESIGN, ALL MACHINE CHECK AND IOP INTERRUPTS ARE NEVER MASKED AND ALWAYS RESULT IN SOFTWARE HALT RESPONSE

8E COUNTER 2 IS LOWER 16 BITS OF FCOS PROGRAM COUNTER. HIGH 16 BITS ARE STORED IN CPU MEMORY HALFWORD 0081

9E COUNTER 1 IS LOWER 16 BITS OF "FCOS KNOWLEDGE OF TIME" HIGH 16 BITS ARE STORED IN CPU MEMORY HALFWORD 0080

10E STORE PROTECT VIOLATION DETECTION ABORTS MEMORY WRITE

11E ALL MUXES AND SHIFTS IN THE PROCESSOR ARE UNDER THE CONTROL OF THE MICROPROGRAM CONTROL UNIT.
(N,R) MEANS DIRECT OR SHIFT N LEFT OR SHIFT N RIGHT

12D THE CURRENT PSW IS STORED IN D REGISTER (PSW BITS 0 TO 31) AND P REGISTER (PSW BITS 32 TO 47) BUT MAY TEMPORARILY BE SWAPPED INTO CORE WHILE REGISTERS ARE BEING USED FOR ARITHMETIC OPERATIONS. IT IS ALSO SWAPPED DURING INTERRUPTS (AT THAT TIME, PSW BITS 48 TO 63 ARE SET)

13D STATUS REGISTER BITS CAN BE INDIVIDUALLY SET ON COMMAND FROM MICROPROGRAM CONTROL UNIT

14D CPU MEMORY WORDS ARE 36 BITS WITH 32 BITS OF DATA WITH 2 PARITY AND 2 STORAGE PROTECT BITS. MEMORY IS ADDRESSABLE TO THE HALFWORD. A PAIR OF PAGES FORMS A SECTOR.

15D EXTERNAL DATA BUS IS THE IOP'S PATH TO CPU MEMORY FOR DIRECT MEMORY ACCESS (DMA). ALSO, THIS BUS IS THE DATA PATH FOR ALL DATA TRANSFERS BETWEEN THE CPU AND EXTERNAL SYSTEMS

16D AUXILIARY DATA BUS IS THE DATA PATH FOR CPU MEMORY TO IOP MEMORY AND ALU TO IOP MEMORY TRANSFERS. THE ADDRESS BUS PROVIDES ADDRESS INFORMATION FOR THESE TRANSFERS

17D IF BIT 0 IS A ONE, AN EXTRA FOUR BITS ARE PREFIXED TO THE ADDRESS AS FOLLOWS: FOR DATA, THE DATA SECTOR REGISTER FOR INSTRUCTION, THE BRANCH SECTOR REGISTER

18D DEFAULT IS 110 (PROCESSOR DATA, DIRECT)

19D SIDE A AND B FOLD TO MAKE 16K X 18 BIT HALFWORD PAGE

20D SIGNALS REPEAT FOR EACH SUBSEQUENT PAGE. POL ( ) PON ( ) ARE SUBSCRIPTED SIGNALS WITH VALUES 1 TO 10

NOTES: 1D FAULT INDICATOR IS DISCONNECTED

4 CPU 1

SIGNATURE		DATE	
DSGN	LINDA S. DUMIS	5-9-78	NATIONAL AERONAUTICS AND SPACE ADMINISTRATION LYNDON B. JOHNSON SPACE CENTER HOUSTON, TEXAS
DR		6-30-78	
ENGR	B.F. JACKSON		CENTRAL PROCESSING UNIT
ENGR		8-23-79	
APP	M.D. Conroy	8/23/79	
APP			SPACE SHUTTLE
OMNIPLAN	S.K. Kimbell	9-9-90	ALL
LTR E	PCN		121 X 34

DWG NO 8.4
PAGE SHEET 1 OF 1

BASIC REV E

CENTRAL PROCESSING UNIT (CPU)

T | S | R | Q | P | O | N | M | L | K | J

CPU MEMORY

STORAGE PAGE 16 X 16K (16,384)

STORAGE PAGE 16 X 16K (16,384)

SEE TYPICAL STORAGE PAGE

POL (1) POH (1)

POL (2) POH (2)

BITS 0-17

BITS 18-35

BITS 0-17

BITS 18-35

CHECK ODD PARITY LOGIC

32 BITS

INSTRUCTION MONITOR

CPU/IOP STORE PROTECT

CPU/IOP STORAGE PARITY

CONTROL SIGNALS

SET PARITY AND STORE BITS LOGIC

STORE PROTECT FLAGS

MAIN MEMORY TIMING PAGE

STORAGE ADDRESS REGISTER (SAR)

STORAGE ADDRESS REGISTER (SAR) BUS

SEE SAR BIT DEFINITIONS TABLE

ADDRESS BUS

MEMORY CONTROL

TIMING GENERATOR

1MS

POWER SWITCH CONTROLS

POH (10)

POL (1)

POH (1)

X-TIMING

Y-TIMING

DRIVER CONTROL

ADDRESS DECODER

READ/WRITE CONTROLS

CLEAR

STROBE

HOLD

LOLC

STATUS CONTROL

BUSY

ADV

SOFTWARE STATUS WORDS

MPOR

POID

SC

CPU POID

CPU POI

CPU POH

STORE COMPLETE (SC)

MACHINE RESET

CPU HALTED

CPU MASTER POWER ON RESET (MPOR)

MAIN STORE

POWER UP/DOWN CONTROL

IOP POI

IOP PO1

80uS 20 MS

TO

2 MS

POWER SUPPLY

+5 VDC

+12 VDC

+6 VDC

+40 VDC

28 VDC

4.75 VDC

5.7 VDC

11.4 VDC

LEVEL DETECT (+11.5 VDC)

LEVEL DETECT >21.5 VDC

INTERNAL VOLTAGE MODULE

EMI FILTER

+5VDC CONTROLLER ASSY

CLOCK 1

START

STOP

OVER CURRENT >350A

CLOCK 1 25 KHZ

OVER VOLTAGE/ UNDER VOLTAGE COMPARATOR LIMITS PFT

5V FAIL

12V FAIL

DC/DC CONVERTER +5VDC

INPUT STORAGE FILTER

POWER SWITCHING AND DRIVE CIRCUITRY

RECTIFIER

OUTPUT STORAGE FILTER

+12VDC CONTROLLER ASSY

CLOCK 2

START

STOP

OVER CURRENT >15A,3A

CLOCK 2 25 KHZ

DC/DC CONVERTER +12 VDC

INPUT STORAGE FILTER

POWER SWITCHING AND DRIVE CIRCUITRY

RECTIFIER

OUTPUT STORAGE FILTER

28 VDC

TO 100 LASER

SERIES DISSIPATIVE REGULATOR

-8 VDC

-15 VDC

-5 VDC

+12 VDC

POWER SUPPLY

CPU TIMING

CPU TIMING AND CONTROL LOGIC

20 MHZ OSCILLATOR

10 MHZ

÷2

÷2

CPL.CP2

TIMING STOPPED

TIMING STOPPED DETECTOR

INTERRUPT LOGIC

SYSTEM RESET

SYSTEM RESET LATCH

POWER ON LOGIC

RPOR

PWR ON/SYS RST

POID (POWER OFF)

CPU/POI (INITIATE PUTAWAY)

SUPERVISOR CALL

EXTERNAL 0, 1, 2, 3, 4

COUNTERS

CPU/IOP ADD SPECIFICATION

ILLEGAL OPERATION

INTERRUPTS 16, 18, 19, 20

INTERRUPTS 14, 15, 17

PRIVILEGED INSTRUCTION

I/O ADR PARITY

INSTRUCTION MONITOR

I/O WRITE PCI DATA PAR

CPU/IOP STORE PROTECT

EXTD STOR DATA PARITY

EXTD STOR ADR PARITY

CPU/IOP STORAGE PARITY

CPU ROS PARITY

MASK CHECK AND LATCH LOGIC SLOT 010 108

MASKS

INTERRUPT PRIORITY LOGIC

INTERRUPT LATCHES

BLITE LOGIC

16-BIT CAB

PROCESSOR (INNER DATA FLOW)

PROCESSOR DATA BUS

MUX

MICROSTORE REGISTERS (8)

GEN PURPOSE FIX PT (8)

GEN PURPOSE FIX PT (8)

FLOATING PT (8)

LOCAL STORE

REGISTER SEL FLAG

COUNTER

A-REGISTER

B-REGISTER

C-REGISTER

D-REGISTER

ALU

SIGNALS

LEFT

RIGHT

CONTROL

DOUBLE REGISTER CONTROLS

64 BIT ARITH AND SHIFT OPERATIONS

B-REGISTER 32 BITS

DATA ADDRESS

INSTRUCTION ADDRESS

PROGRAM FLOW CONTROL

NEXT INSTRUCTION REGISTER

NIR

OPERATION REGISTER

OPRED

PROGRAM REGISTER

PRED

SEL FLAG

MASKS SL010 SL108

BIT 15 (MODE)

COUNTER 2 SL010 SL108

COUNTER 1 SL09 SL107

CTR 2

CTR 1

1 MHZ

CTR 2

CTR 1

CTR 2

CTR 1

RESULT ANDED WITH LE

RESULT ANDED WITH LA

BITS 16-19

BITS 16-31

BITS 0-15

INTRA CPU DATA FLOW MUX

ROSM BITS 21-28

ALL ONES

MAIN BUS BITS 16-31

MAIN BUS BITS 0-15

STAT-LO

OPRED 8-13

STORE PROTECT FLAGS

STATUS REGISTER BITS 16-31

STATUS REGISTER BITS 0-15

SEE STATUS REGISTER TABLE

DATA INPUT BUS 32 BITS

BITS 20-31

ROSM 12 BITS

FORCED ADDRESS

INTERRUPT RESPONSE

MICROPROGRAM CONTROL LOGIC

SYS RST LATCH

SYS RST

CPL.CP2

GPU LOCKOUT

INTERFACE RESET

PRIV INST INTERRUPT

PRIVILEGED INSTRUCTION

ILLEGAL OPER

MODE BIT

ROS 2048 X 48 BITS

MICROSTORE ADDRESS REGISTER

PSW BITS 48-63

INTERRUPTS 4-20

ALU CONTROL LOGIC

ALU CONTROL SIGNALS

LOCAL STORE CONTROL LOGIC

MASK CHECK AND LATCH LOGIC SLOT 010 108

MASKS

INTERRUPT PRIORITY LOGIC

INTERRUPT LATCHES

INTERRUPTS

NEXT MICRO-ADDRESS LOGIC RC101,2,5,7

ROSAR 12 BITS

MAX

ROSBR 12 BITS

MAX

MAX

MAX

MICROPROGRAM CONTROL UNIT

ROSAR (48 BITS)

ROSBR (48 BITS)

0 TO 10

11 TO 16

17 TO 28

29 TO 43

44

45 NOT IN USE

MEAU CONTROL

16 BITS

STATUS REG

MEMORY CONTROL

PROCESSOR AND MUX LOGIC

DOUBLE REGISTER CONTROLS

ROSBR PARITY BIT

000 PARITY CHECK LOGIC ROOST

CPU INTERRUPT ENABLE BIT

BIT 27

SUPERVISOR CALL

OP DECL

MIA DISABLE

P010

CONTROLS

SUPERVISOR CALL

LE, LA, L3

H1, H2, H3, HE

ROS 001

002

003

004

005

006

007

010

011

012

013

CPU MEMORY BUS

MEMORY DATA BUS

COMPUTER ADDRESS BUS 16 BITS

ADDRESS EXTENSION LOGIC

D REG 24-31

ROSAR BIT 27

ADDRESS BUS CONTROL UNIT

LESS THAN 28000 HEX

MANGE CHECK

YES

NO

ADDRESS BUS 16 BITS

ADDRESS BUS 19 BITS

CPU/IOP ADR SPECIFICATION

MEMORY CONTROL

MASTER BUS CONTROL UNIT

MAIN BUS 32 BITS

DIRECT

SWAP

HALFWORDS

XA001-4

XB001-4

32 BITS

MAIN DATA BUS (TO IOP MEMORY)

ADDRESS BUS (TO IOP) 19 BITS

MEMORY BUS (TO IOP MEMORY)

DATE: 8/15/90 | NAME: VSH | VERSION: INR3.3

W V U T S R Q P O N

8 7 6 5 4 3 2 1

PROGRAM FLOW CONTROL

DMA CONTROL
IOP READ TRIGGER
ADDRESS BUS (FROM IOP)
ADDRESS BUS (TO IOP MEMORY)
LOCKOUT
ADDRESS EXTENSION LOGIC
D REG 24-31
ROSDR BIT 27
ADDRESS BUS CONTROL UNIT
RANGE CHECK
LESS THAN 28000 HEX ?
CPU/IOP ADR SPECIFICATION
CONTROL SIGNALS
I/O ADR PARITY
PARITY CHECK LOGIC
PARITY SET LOGIC
19 BITS
ADDRESS BUS 16 BITS
ADDRESS BUS 19 BITS
ADDRESS BUS (TO IOP) 19 BITS
MEMORY DATA BUS
COMPUTER ADDRESS BUS 16 BITS
MBCU CONTROL
MASTER BUS CONTROL UNIT
I/O WRITE/PCI DATA PARITY
HALFWORD PARITY CHECK LOGIC
EXTERNAL DATA BUS (TO/FROM IOP)
TS001-9
35 BITS
32 BITS
MAIN BUS 32 BITS
EXTD STOR DATA PARITY
HALFWORD PARITY SET LOGIC
MAIN DATA BUS (TO IOP MEMORY)
TO/FROM IOP MEMORY (AUXILLARY DATA BUS)
ROSDR BITS 21-28
ALL ONES
INTRA CPU DATA FLOW MUX
MAIN BUS BITS 0-15
MAIN BUS BITS 16-31
STAT-LO
OPREG 8-13
OPREG
PREG
NIR
CTR 1
CTR 2
RESULT ANDED WITH H_E
BITS 16-19 ANDED WITH L_A
RESULT ANDED WITH L_E
BITS 0-15
BITS 16-31
SEE STATUS REGISTER TABLE
STATUS REGISTER BITS 0-15
STATUS REGISTER BITS 16-31
STORE PROTECT FLAGS
32 BITS
DATA INPUT BUS 32 BITS
SL009 SL107 COUNTER 1
SL010 SL108 COUNTER 2
1 MHZ
MASKS
BIT 15 (MODE)
PROGRAM REGISTER
REG SEL FLAG
SL007-8 OPERATION REGISTER
SL007-8 NEXT INSTRUCTION REGISTER
DOUBLE REGISTER CONTROLS
64 BIT ARITH AND SHIFT OPERATIONS
MUX
A-REGISTER
REGISTER SEL FLAG
CONTROL
LOCAL STORE
MICROSTORE REGISTERS (8)
GEN PURPOSE FIX PT (8)
GEN PURPOSE FIX PT (8)
FLOATING PT (8)
1 MHZ CLK
EXTERNAL INTERRUPTS 0, 1, 2, 3, 4
IOP MEM INTERRUPTS
MISCELANEOUS CONTROLS
EXT STOR ADR PARITY
CPU/IOP STOR PARITY
LOCKOUT
INTERFACE RESET
CPU FAULT
MACHINE RESET
IOP IMS
CPU POI
IOP POI
IOP BCE, MIA DISABLES
SYSTEM RESET
PCIO CONTROLS
ADDRESS BUS
CPU TIMING
20 MHZ OSCILLATOR
CPU TIMING AND CONTROL LOGIC
10 MHZ
÷5
÷2
CP1, CP2
TIMING STOPPED DETECTOR
TIMING STOPPED
+5 VDC
POWER SUPPLY
DC/DC CONVERTER +5VDC
INPUT STORAGE FILTER
POWER SWITCHING AND DRIVE CIRCUITRY
RECTIFIER
OUTPUT STORAGE FILTER
+5VDC CONTROLLER ASSY
OVER CURRENT DETECT >50A
STOP CLOCK
START
CLOCK 1 25 KHZ
OVER VOLTAGE/ UNDER VOLTAGE COMPARATOR LIMIT±5 PCT
5V FAIL
12V FAIL
+12 VDC
+6 VDC
CLOCK 1
START
STORE COMPLETE (SC)
INTERNAL VOLTAGE MODULE
LEVEL DETECT >21.5 VDC
LEVEL DETECT <17.5 VDC
POWER SUPPLY LOGIC
INTERNAL VOLTAGE SUPPLY
28 VDC
+40 VDC
+6 VDC
+12 VDC
TD 2 MS
4.75 VDC
38 VDC
5.7 VDC
11.4 VDC
START
CLOCK 2
POWER UP/DOWN CONTROL
TD 80±20 MS
IOP IMS
MACHINE RESET
CPU MASTER POWER ON RESET (MPOR)
CPU INHIBIT MAIN STORE
CPU POI
DC/DC CONVERTER +12 VDC
+12 VDC CONTROLLER ASSY
OVER CURRENT >19.3A
TD 100 μSEC
CLOCK 2 25 KHZ
CPU POID
−8 VDC
−15 VDC
SERIES DISSIPATIVE REGULATOR
−5 VDC
EMI FILTER
28 VDC
MAIN
MPOR
POID
STATUS CONTROL
ADV
BUSY
SC
SOFTWARE STATUS WORD
READ/WRITE CONTROLS
IMS
TIMING GENERATOR
POWER SWITCH CONTROLS
MEMORY CONTROL
DRIVER CONTROL
ADDRESS DECODER
SEE SAR BIT DEFINITIONS TABLE
STORAGE ADDRESS REGISTER (SAR)
STORAGE ADDRESS REGISTER (SAR)
ADDRESS BUS
CPU POID

BASIC REV E

DATE	NAME	VERSION
DATE: 9/14/87	NAME: MAG	VERSION: INV, 7
DATE: 08/17/90	NAME: LAM	VERSION: BPT, 6
DATE: 08/24/90	NAME: MFB	VERSION: INV, 8

MASS MEMORY UNIT 2

MASS MEMORY UNIT 1

1. THERE ARE FIVE SEPARATE SETS OF TRUE-COMPLEMENT WIRES RUNNING FROM THE BITE LOGIC TO THE MMU EXTERNAL CONNECTOR AND DRIVEN BY ONE SET OF DRIVERS
2. THIS POWER TRANSIENT CAUSES SHUTDOWN OF UNIT AND REQUIRES POWER CYCLING TO RECOVER
3. A POWER SPIKE (15V WITH CONTINUAL VOLTAGE OF (24V FOR 20-250 μSEC, CAUSES A SINGLE NO 1 OUTPUT WHEN POWER RESUMES. FOR >250 μSEC SPIKES AND POWER OFF CONDITIONS, RESUMPTION OF POWER CAUSES AN OUTPUT ON NO 1, FOLLOWED BY A STEP OUTPUT ON OUTPUT NO 2.
4. TACH SIGNAL IS USED FOR ACCELERATION AND DECELERATION. THE TAPE CLOCK IS USED ONCE THE TRANSPORT IS UP TO SPEED AND ENTERS THE PRECISION CONTROL MODE. (5 ± .5 SECONDS)
5. STATUS REGISTER A AND B BITS 9-13 AND 9-24 RESPECTIVELY ARE PACKED LEFT JUSTIFIED IN THE DOWNLIST
6. ONE PULSE FOR EACH WORD SHIFTED INTO MIA-2
7. THE INITIALIZE MODE PRESETS THE STORAGE REGISTER TO BOF FILE 4
8. TAPE FACTS:
   - 600 FEET LONG/0.5 INCHES WIDE
   - 1 MHZ INPUT/OUTPUT RATE
   - TAPE TRANSVERSE TIMES:
     - 0.823 SEC PER SUBFILE
     - 8.2 SEC PER FILE
     - APPROX. 65.6 SEC PER TAPE
9. TAPE ORGANIZATION

FILE ORGANIZATION
(8 FILES PER TAPE)

BOT	000	001	010	011	100	101	110	111	EOT

SUBFILE ORGANIZATION (64 SUBFILES PER FILE)

FILE 4 (100) 8 SUBFILES (PER TRACK)

READ/WRITE

										TRACK
→	BOF	000	001	010	011	100	101	110	111	EOF	0
←	EOF	111	110	101	100	011	010	001	000	BOF	1
→	BOF	000	001	010	011	100	101	110	111	EOF	2
←	EOF	111	110	101	100	011	010	001	000	BOF	3
					CONTROL TRACK						
→	BOF	000	001	010	011	100	101	110	111	EOF	4
←	EOF	111	110	101	100	011	010	001	000	BOF	5
→	BOF	000	001	010	011	100	101	110	111	EOF	6
←	EOF	111	110	101	100	011	010	001	000	BOF	7

BLOCK ORGANIZATION (EVEN TRACK) (32 BLOCKS PER SUBFILE)

SUBFILE 3 (011)

00000	00001			11111	TRACK 2
		CONTROL TRACK			

WORD ORGANIZATION PER BLOCK (EVEN TRACK) (512 WORDS PER BLOCK)

BLOCK 1 (00001)

0	1			511	0	TRACK 2
		CONTROL TRACK				

INTERBLOCK GAP ORGANIZATION

GAP DETECT WORD (00010101 BI-Φ-L)

512 DATA WORDS	INTERBLOCK GAP (BIT PATTERN 101010...)									(BI-Φ-L WRITTEN AT 1/2 THE NORMAL BI-Φ-L RATE)		TRACK 2
	REV SYNC	A1, A2, A3,	FILE		SUB FILE		BLOCK ADDRESS		P			
512 BITS 1010--- (ONE BIT PER DATA WORD)	16 BITS 1010---	9 BITS	3 BITS	3 BITS	3 BITS	3 BITS	1 BIT	5 BITS	1 BIT	1 BIT	CONTROL TRACK	

BOT

DATA DETECT WORD (1010101 BIT PATTERN) (NORMAL BI-Φ-L)

	FWD SYNC	A1, A2, A3,	FILE		SUB FILE		BLOCK ADDRESS		P		512 DATA WORDS
166 BITS 1010---	9 BITS	3 BITS	3 BITS	3 BITS	3 BITS	1 BIT	5 BITS	1 BIT	1 BIT	16 BITS 1010---	512 BITS 1010--- (ONE BIT PER DATA WORD)

EOT

NOTES:
1. BOT/EOT OPTICAL DETECTORS ARE OPTICAL TYPE SENSORS, EACH UTILIZING ITS OWN DIODE/SENSOR ASSEMBLY WHICH DETECTS A WINDOW IN THE TAPE TO GENERATE A BOT OR EOT SIGNAL. IF EOT IS SENSED, A TURNAROUND SIGNAL IS GENERATED. IF BOT IS SENSED, ALL MMU OPERATIONS HALT AND POWER CYCLING IS REQUIRED TO RECOVER

5 MM

SIGNATURE		DATE	NATIONAL AERONAUTICS AND SPACE ADMINISTRATION LYNDON B. JOHNSON SPACE CENTER HOUSTON, TEXAS	
DSGN	MIKE BECKER	6-28-79		
DR				
ENGR	T. W. KEELER	8/24/90	MASS MEMORY	
ENGR	Tony W Keeler	8/24/90		
APP	M. D. Engo	8/28/90		
APP			SPACE SHUTTLE	DWG NO 8.5
OMNIPLAN			ALL	
LTR E	PCN		126.5 X 34	PAGE SHEET 1 OF 1

BASIC REV E

READY DISCRETE

CONTROLLER SELECT DIRECTION

CONTROLLER TAPE LOCATION

STORAGE REGISTER

HOLD REGISTER

HOLD REGISTER

CONTROL TRACK REGISTER

MIA INTERFACE 1

T | S | R | Q | P | O | N | M | L | K | J

DATE: 08/24/90 | NAME: MFB | VERSION: INK.8

BASIC REV E

WRITE ENABLE CMD

OP CODE | TRACK | P

1010 | 9 12 13 15 16 27 28

EXTENDED DATA CMD

OP CODE | BLOCK COUNT | P

0011 | 9 12 13 19 20 27 28

READ/WRITE CMD

OP CODE | TRACK | SUBFILE | STARTING BLOCK | BLOCK COUNT | P

READ: 1001 | WRITE: 1000 | 9 12 13 15 16 18 19 23 24 27 28

CMD WORDS TO MMU FROM GPC

COMMAND DATA WORD

DATA FIELD | SEV | P

101 | 9 24 25 27 28

POSITION REQUEST/STATUS REQUEST CMD

OP CODE | P

POSITION STATUS: 0010 / 0001 | 9 12 13 27 28

POSITION TAPE CMD

OP CODE | TRACK | SUBFILE | BOF EOF | FILE | P

0000 | 9 12 13 15 16 18 19 20 21 22 23 24 26 27 28

SEARCH COMPLETE WORD

TRACK | FILE | SUBFILE | BLOCK | SEV | P

9 10 11 13 14 16 17 19 20 24 25 27 28

RESPONSE DATA WORD

DATA FIELD | SEV | P

9 24 25 27 28

RESPONSE WORDS FROM MMU TO GPC

TAPE POSITION WORD

TRACK | FILE | SUBFILE | BOF EOF | SEV | P

9 10 11 13 14 16 17 19 20 21 22 24 25 27 28

$^{E}Z_{3}$ 8,1 — DBC — MMU 2 DATA BUS IOP PORT 19

$^{E}Z_{3}$ 8,1 — DBC — MMU 1 DATA BUS TO IOP PORT 18

STRAP BACK MIA ID CODE (11) — LSB — MSB

$V_{CNTLAB2}$ — MMU 2 — ON / OFF — PNL 015 — S12 — RPC 7.5A — V_{MNB} FPC2 — V72 ST186 OF2 N/A — MASS MEMORY NO 2 BUS CMD — 1 = ON 1 = S/S

$V_{CNTLAB1}$ — MMU 1 — ON / OFF — PNL 014 — S13 — RPC 7.5A — V_{MNA} FPC1 — V72 ST185 OF1 N/A — MASS MEMORY NO 1 BUS CMD — 1 = ON 1 = S/S

RESET DISCRETES NOT CONNECTED

$^{U}Z_{6}$ 8,3 $^{J}Z_{7}$ 8,1 (2) MMU 2 READY DISCRETE (D107-5 LINES)

$^{U}Z_{6}$ 8,3 $^{J}Z_{7}$ 8,1 (1) MMU 1 READY DISCRETE (D106-5 LINES)

READY DISCRETE

MIA ADAPTER

RCVR — BITS 1-28 — MANCHESTER TO NRZ AND VALIDATION

RECEIVE SYNC (CMD OR DATA)

MIA PARITY ERROR

MIA BIT COUNT ERROR (<25)

MIA INVALID MANCHESTER

RECEIVE SHIFT CLOCK

RECEIVE DATA NRZ

RECEIVE DATA BUS ACTIVE

RECEIVE END OF WRD

DATA READY

RECEIVER ENABLE (33) $^{E}Z_{3}$

MM XMIT ENABLE (23) $^{J}Z_{3}$

MM DATA READY (34) $^{J}Z_{2}$

MASTER RESET

TIMING AND LOGIC CONTROL

16 MHZ CLK — TIMING GEN — STBY +5V (+5) — 8 MHZ CLK (35) $^{D}Z_{1}$

TRANSMIT DATA AVAILABLE

TRANSMIT SERIAL DATA NRZ

TRANSMIT SHIFT CLOCK

TX — NRZ TO MANCHESTER SYNC GEN, PARITY GEN — 2 MHZ (31) $^{K}Z_{2}$

24 BIT SERIAL NRZ/PARALLEL OR PARALLEL/ SERIAL NRZ BUFFER REGISTER

SEV BITS 25-27

BITS 4-27 (PARALLEL)

BITS 9-27 (PARALLEL)

19 BIT INPUT BUFFER REGISTER — BITS 9-27 — STROBE

BITS 9-12, 20-21

POWER SUPPLY

28VDC — DC/DC CONVERTER

(36) $^{H}Z_{8}$ WRITE +12 ENABLE — WRITE POWER — +12 VDC

+12 VOLT REGULATOR — +12 VDC STBY — +12 VDC READ — +12 VDC READ/WRITE

+5 VOLT REGULATOR — +5 VDC STBY — +5 VDC READ — +5 VDC WRITE/READ

+7 VOLT REGULATOR

-12 VOLT REGULATOR — -12 VDC STBY — -12 VDC READ

PWR SUPPLY TOLERANCE — POWER SUPPLY OUT OF TOLERANCE

+5 VDC STBY — +5 VDC READ

READ POWER RESET — READ PRESET

MM STROBE — MM MALFUNCTION STROBE

28 VDC — POWER TRANSIENT (INPUT <15V AND REMAINS <24V FOR > 250 µS) — PWR TRANSIENT

+28 VDC — SERVO POWER

RESET DISCRETE REVS 1 2 3 4 5

MIA INTERFACE 1

(38) $^{D}Z_{1}$ NOT READY FOR CMD — CMD REC WHEN NOT READY — WRITE PRESET

INTERRUPT — DATA READY — CLR D Q CK — WORD COUNT INTERRUPTED

MIA DATA READY

CMD SYNC — SYNC — SIGNAL DISTRIBUTION CONTROL — CMD REQUEST

ADDRESS STROBE (15) $^{S}Z_{2}$ $^{S}Z_{3}$

COMPOSITE MIA ERROR

CMD SYNC

WRITE 101 ERROR

EOF

BOF

POS TAPE REQ

BIT 10

INVALID CMD/MIA ERROR

DATA READY

SEV=101 CHECK — VALID WRITE CMD (27) $^{R}Z_{3}$

ENABLE — CMD WORD DECODER

9	11	12	INVALID COMMAND
1	1	1	TAPE POS REQ
0	1	0	STATUS REQ
0	0	1	POS TAPE REQ
0	0	0	WRITE ENA REQ
1	1	0	READ REQ
1	0	1	WRITE REQ
1	0	0	EXBC
0	1	1	

BIT 10 — BIT 20 — BIT 21

BITS 25-27 — ADDRESS COMPARE — BIT 4-8 — COMMAND ADDRESS COMPARE — MIA ID

TRACK REQ TRANSFER

MODE CMD CMPLT — (32) $^{D}Z_{2}$ FILE=

STOP OP

R/W FILE INEQUALITY

READ/VALID WRITE REQ

EXBC

GATE IN EXBC BITS

BITS 24-27 — LOAD — BLOCK COUNT CT=0 — DECREMENT CLOCK

GATE — BITS 20-23

MODE CMD CMPLT

R/W FILE INEQUALITY

FORCED ENABLE

RUN CMD — RUN

GATED SYNC

WD CK@2 MM RESET

STOP OP

(27) $^{S}Z_{6}$ — WRITE

VALID WRITE CMD

VALID READ/WRITE CMD

READ REQ — READ

VALID READ CMD

STOP OP

R/W FILE INEQUALITY

$^{R}Z_{7}$ (15) ADD STROBE — 39.4 µSEC DELAY — BLOCK COUNT=0 — BCO

WRITE ENA — WRITE REQ

BITS 13-15 TRACK ADD — ENABLE — WRITE COMPARE — STORED TRK REQ — WEN

MODE CMD CMPLT — RUN

FORCED ENABLE

POS TAPE REQ — POSI

POSITION TAPE CMD

VALID SEARCH ADD

WRITE PROTECT — WRITE REQ

MODE CMD CMPLT

WRITE PROTECT VIOLATION CMD

$^{R}Z_{7}$ (15) ADD STROBE

BIT 20 — BIT 21 — BOF OR EOF (SEL)

CONTROLLER TAPE LOCATION

BI-Ø-L TO NRZ — TAPE LOCK ENABLE — TAPE CLOCK — CONTROL TRACK PARITY ERROR — PARITY ERROR DETECTOR — TAPE LOCK VALID — VALID SYNC DETECT — BLOCK SYNC — DELAYED BLOCK SYNC

CONTROL TRACK REGISTER

NRZ — CLK — P | CURRENT BLOCK ADDRESS | 0 | CURRENT SF ADDRESS | CURRENT FILE ADDRESS | 0 0 0 | A3 A2 A1 | SYNC (FWD OR REV)

28 27 23 22 21 19 18 16 15 14 13 12 11 10 9 1

BITS 1-9

25, 26, 27 — 23, 24 — 10, 11

BLOCK COUNT

TRUE BOF/EOF — SUBFILE ADDRESS SELECT

SERIAL TAPE LOCATION — $^{E}Z_{4}$ (16) POSITION SHIFT CLK

HOLD REGISTER

SCW BLOCK ADDRESS OR A1, A2 | SF ADDRESS | FILE ADDRESS | TRACK ADDRESS | XX

27 23 21 19 18 16 15 13

BLOCK SYNC

TAPE FILE MSB 16

TAPE SF MSB 19

WORD CLOCK Ø2 — $^{J}Z_{1}$ (7)

NEW SF DETECTOR

HOLD REGISTER

SF ADDRESS | A3 A2 A1

21 19 12 11 10

BLOCK SYNC

BITS 19, 20, 21

EOF BOF

A3 — STOP ENABLE STROBE — DELAYED BLOCK SYNC

BOF OR EOF

STOP ENABLE GATE

STORAGE REGISTER

INITIALIZE MODE

FILE ADDRESS | STARTING BLOCK OR A1, A2 | SF ADDRESS | TRACK ADDRESS | STORED TRACK REQ

26 24 23 19 18 16 15 13

STORED MOTOR DIRECTION

POS TAPE REQ (LOAD CONTROL)

TRACK SEL A

TRACK SEL B

TRACK SEL C

FILE (SEL) — FT — FILE COMPARE

SUBFILE COMPARE

BLOCK EQUALITY — BLOCK/SF COMPARE

R/W EQUALITY STROBE — R/W EQUALITY

SF EQUALITY

SUBFILE≤SUBFILE (SEL)

(32) $^{R}Z_{5}$

FILE≤FILE (SEL)

BITS 13-26

FILE EQUALITY

WRITE POWER ENABLE

TRACK REQ XFER (LOAD CONTROL)

BITS 20, 21

VALID WRITE C

TAPE LOCK VAL

MODE CMD CMPL

ADD STROBE

READ/VALID WR

FILE EQUALITY

BOF OR EOF (S

SF < SF (SEL)

EOF (SEL) BIT

BOF (SEL) BIT

BOF

STORED TRACK

BOF OR EOF

EOF

SUBFILE EQUAL

INITIALIZE

FILE < FILE (S

$^{L}Z_{3}$ (9)

(10) $^{L}Z_{3}$ (41) ^{J}Z

(20) $^{F}Z_{5}$ $^{L}Z_{1}$

R/W EQUALITY

INITIALIZE MODE

BC = 0

VALID READ CMD

DATE: 08/03/94	NAME: LAM	VERSION: INK: 13
DATE: 05/12/96	NAME: PSD	VERSION: BPT: 13
DATE: 05/23/96	NAME: MDU	VERSION: INK: 14

(S72OP)
(S67OP)
(S93OP)
(SOFTWARE SHIFTS REGISTER 2 LEFT ONE BIT AND *OR'S IT WITH REGISTER 3 TO FORM HARDWARE STATUS WORD 2 FOR POLL RESPONSE)

(S72OP)
(S65OP)
(S91OP)

DEU 4
DEU 1
DEU 2
DEU 3

MSS DU (CRT 4)
LEFT DU (CRT 1)
RIGHT DU (CRT 2)
CENTER DU (CRT 3)

DU PHOSPHOR PROTECT NOT WIRED TO DEU IN FLIGHT UNITS

DRIVER IS ONLY ENABLED BY RUNNING SASTP AFTER POWER CYCLE, NORMALLY NOT ENABLED AT LAUNCH

DU POWER SUPPLY ERROR
DU FILAMENT ERROR
DU PHOSPHOR PROTECT ERROR
DU VIDEO ERROR
DU DEFLECTION ERROR

DEFLECTION ERROR

DU GO/NO GO
YOKE RTN
DEU GO/NO GO

BIT 0=LOGIC 1

DEU REGISTER 1
DEU REGISTER 2
DU REGISTER

BITS 1-15
BITS 4-15
BITS 0-3

16 TRI-STATE BUS DRIVERS

NOTE: DU FILAMENT ERROR (BIT 5) AND DU TEMPERATURE ERROR (BIT 6) DO NOT LATCH

RESET CONTROL
RESET REG 1
RESET REG 2
RESET DU REG

BITE STATUS DATA

BITS 0-15 HSR NO 1
BITS 0-15 HSR NO 2

TIMING AND CONTROL

ERROR SAMPLING

PARAMETER	TD
HSR NO. 1	
BITS 0, 1, 3, 6	NO TRIP
BITS 2, 8	0 SEC
BITS 4, 5, 7, 9-15	6-10 SEC
HSR NO. 2	
BITS 0-7, 12-15	NO TRIP
BITS 8-11	6-10 SEC
CPU MEM PAR ERR	6-10 SEC
PWR SUPPLY ERR	0 SEC

X DEFLECTION RECEIVER
Y DEFLECTION RECEIVER
X DEFLECTION AMPLIFIER
Y DEFLECTION AMPLIFIER
TEMPERATURE ERROR (T>125° C)
VIDEO ERROR
VIDEO BITE
VIDEO BITE MUST BE ARMED BY SASTP
VIDEO RECEIVER
VIDEO
CATHODE
FILAMENT
YOKE (MAGNETIC DEFL)
CRT

TYPICAL DU BITE CIRCUITRY
TO DEU
+V
1=NO ERROR 0=ERROR DETECTED
NOTE: IF DU INPUT POWER OR DU PWR ON DISC LOST, ALL BITE ERRORS WILL BE SET EXCEPT TEMP (REQUIRES RELAY PWR FOR SET), VIDEO (REQUIRES ARMING BY SASTP), AND PHOSPHOR PROTECT (FLIGHT UNITS ONLY)

5 INCH BY 7 INCH VIEWING AREA (26 LINES BY 51 CHARACTERS)
3/4" RADIUS
BRT
DU
DEU

PHOSPOR PROTECT
DISABLE BEAM
CONTROL GRID (G1-DISABLES ELECTRON BEAM)
PHOSPOR PROTECT OVERRIDE
POWER SUPPLY ERROR
LOW FILAMENT CURRENT
LOW VOLTAGE POWER SUPPLY AND CONTROL
EMI FILTER
ELAPSED TIME INDICATOR (XXXX HRS)
DU PWR ON DISCRETE
6.3V
FILAMENT PWR
±80VDC
±63VDC
±25VDC
±15VDC
±5VDC
CIRCUIT WIRED IN FLIGHT UNITS ONLY

ACCELERATOR (+22-2300V)
FOCUS (ELECTROSTATIC)
ANOD+ (16 KV)
HIGH VOLTAGE POWER SUPPLY
±25VDC
±80VDC

BRIGHTNESS CONTROL
GO/NO GO INDICATOR
GO/NO GO INDICATOR
AMBIENT LIGHT DETECTOR

SYMBOL GENERATOR

FEATURE CONTROL 10 BITS
ROTATION CONTROL 12 BITS
POSITION CONTROL 11 BITS
CHARACTER CONTROL 14 BITS
CIRCLE GEN CONTROL 10 BITS
VECTOR GEN CONTROL 12 BITS
X Y TRANSLATE CONTROL 11 BITS
ANALOG CONTROL 9 BITS
REPEAT CONTROL 11 BITS
INTENSITY CONTROL 7 BITS

TO SYMBOL GENERATOR CIRCUITS
SIN/COS PARITY ERROR
CHARACTER PARITY ERROR
CIRCLE OSC ERROR
INTENSITY PARITY ERROR

X Y POSITION D/A
CHARACTER INTEGRATOR
CIRCLE/VECTOR GENERATOR SIZE CONTROL
X Y TRANSLATE D/A
INTENSITY D/A
OVERSCAN

ROTATION MUX
OUTPUT MUX

X DEFL DRIVER
Y DEFL DRIVER
VIDEO DRIVER

ANALOG BITE
ANALOG DEFL (ZERO TEST)
ANALOG DEFL (NON-ZERO TEST)
ANALOG PULSE TEST
ANALOG FAIL

BIT NO	HARDWARE STATUS REGISTER NO 1 (CONT'D)
4	INTENSITY PARITY ERROR
5	SIN/COS PARITY ERROR
6	SYM GEN ACTIVE STATUS
7	CHARACTER PARITY ERROR
8	OSCILLATOR ERROR
9	ANALOG ZERO DEFL TEST
10	ANALOG NON-ZERO DEFL TEST
11	ANALOG PULSE TEST
12	CIRCLE OSC ERROR
13	ANALOG FAIL (OR OF 9-11)
14	SYM GEN DISPLAY WRAP ERROR
15	SYM GEN REFRESH ERROR

23. DEU RESPONSE DATA WORDS

DATA SYNC DEU ADDRESS | 16 DATA BITS AS DEFINED BELOW | PARITY

MAJ FUNC SW

MSG TYPE K1 DEU ID SW K2

DATA WORD 1 IS STD HEADER

- 'MSG RESET' MESSAGE
- MAJ FUNC: 0=PL, 1=GNC 2=SM, 3=NOT USED
- 'ACK' MESSAGE
- DISPLAY FREEZE
- KEYBOARD MSG PRESENT
- STAND-ALONE SELF-TEST IN PROGRESS
- CRITICAL BITE STATUS PRESENT
- INITIALIZATION REQUIRED

DATA WORD 2: FORMAT INDEX | NOT USED | COUNT OF KEYSTROKES | KEYSTROKE CODE | KEYSTROKE CODE | KEYSTROKE CODE

30 IS THE MAXIMUM NUMBER OF KEYSTROKE CODES. PACKED 3 PER WORD AND LEFT JUSTIFIED

DATA WORDS 3-12: HARDWARE STATUS WORD 1

UNUSED KEYSTROKE CODES WILL BE PADDED ZERO

DATA WORD 13: HARDWARE STATUS WORD 2

DATA WORD 14: SOFTWARE STATUS WORD

DATA WORD 15: CHECK SUM (2'S COMPLIMENT OF PREVIOUS 15 WORDS)

DATA WORD 16

FOLLOWING THE DEU TRANSMISSION OF THIS RESPONSE, BITS 13, 19, 21, AND 23 OF THE HEADERWORD ARE RESET. ADDITIONALLY, THE DEU HARDWARE AND SOFTWARE BITE STATUS

22. IF LVPS SENSES EXCESS CURRENT, THE POWER SUPPLY WILL SHUTDOWN, AUTO RESET, AND MAY RESULT IN ON/OFF CYCLING.

21. CRT 4 USES KEYBOARD ADAPTER A IN DEU 4

20. DU TEMPERATURE ERROR WILL ALWAYS TRIP DU GO/NO GO INDICATOR, ALL OTHER DU BITE REQUIRES ARMING BY SASTP

19. FLAGS ARE ALL BLACK UNTRIPPED, BLACK AND WHITE (AS SHOWN) TRIPPED

18. WIRING RETURNS TO DEU FOR GROUND

17. SYMBOL GENERATOR CIRCUITS INCLUDE:
1. CHARECTOR AND INTENSITY
2. ANALOG SWITCH CONTROL
3. DIGITAL CONTROLS
4. VIDEO CONTROLS
5. TYPE CONTROLS

16. KBA-A (OR KBA-B) ERROR: SET WHEN THE KEYSTROKE CODE IS NOT SENT TO DEU MEMORY (VIA TRI-STATE BUS DRIVERS) WITHIN 9 MILLISECONDS FOLLOWING THE INITIAL KEYBOARD BREAK-IN REQUEST

15. ANALOG BITE: DEU ANALOG CIRCUITS DETECT AN ERROR IN RESPONSE TO THE ANALOG TEST FCN. AFFECTS BITS 9, 10, 11, & 13 IN THE HARDWARE REGISTER 1. VALID DURING SASTP ONLY

14. REFRESH ERROR: COUNTDOWN COUNTER INITIATING THE START OF THE REFRESH CYCLE IS OVERDUE BY 18 MS AS INDICATED BY AN R-C TIMER

13. CIRCLE OSC ERROR: CIRCLE REPETITION RATE GOES TO ZERO

12. CHARACTER PARITY ERROR: CHARACTER GENERATOR ROM PARITY ERROR. CHECK IS PERFORMED EACH TIME THE ROM IS READ (I.E. FOR EACH CHARACTER)

11. SIN/COS PARITY ERROR: SINE-COSINE ROM PARITY ERROR. CHECK IS PERFORMED EACH TIME SINE-COSINE ROM IS ACTIVATED

10. INTENSITY PARITY ERROR: INTENSITY PROM PARITY ERROR. CHECK IS PERFORMED EACH TIME PROM IS ACTIVATED (I.E. FOR ALL SYMBOLS)

9. IPL ERROR: IPL PROM PARITY ERROR FOLLOWING A MANUAL IPL OR A PERIODIC IPL PROM PARITY CHECK INITIATED BY DEU RESIDENT SOFTWARE

8. IPL CIRCUIT CHECK ERROR: PARITY ERROR RESULTING FROM A PERIODIC IPL PROM PARITY CHECK (NOT USED)

7. MIA CMD ERROR (ANY ONE OF THE FOLLOWING)
1. MIA PARITY ERROR
2. TRANSMIT MANCHESTER ERROR (FROM IOP)
3. BIT COUNT ERROR (ON RECEIVED CMD WRD)

6. MIA ECHO CHECK ERROR: TRANSMIT NRZ DATA DOES NOT COMPARE TO THE RECEIVE NRZ DATA ON THE INTERFACE OF THE MIA AND MIA ADAPTER

5. DU PHOSPHOR PROTECT: ATTEMPTS TO DISABLE ELECTRON BEAM IF ERROR IS FOUND IN X OR Y DELECTION RECEIVERS, VIDEO RECEIVER, OR POWER SUPPLY. FLIGHT UNITS NO-OP THIS CIRCUITRY VIA PHOSPHOR PROTECT OVERRIDE

4. DU VIDEO ERROR: LAST STAGE OF VIDEO AMPLIFIER ALWAYS ON

3. DU POWER SUPPLY ERROR: THE ±80, ±25, -15 AND +5 VOLTAGES ARE SUMMED FOR COMPARISON TO A REFERENCE VOLTAGE. THE BIT IS SET WHEN THE COMPARISON FAILS

2. DU DEFLECTION ERROR: IMPROPER BEAM POSITION DETECTED BY COMPARING DEFLECTION SIGNAL VERSUS YOKE RETURN

NOTES: 1. SOFTWARE STATUS WORD

BIT	DESCRIPTION
0	DISPLAY/FORMAT DATA FILL ERROR
1	SPARE
2	INITIALIZATION PERFORMED (CRITICAL BITE)
3	INVALID FILL/DUMP WORD COUNT
4	MIA WRAP WORD ERROR
5	COMMAND OVERLOAD
6	SPARE
7	CPU MEMORY PARITY ERROR (CRITICAL BITE)
8	SPARE
9	INVALID MESSAGE RECEIVED
10	RIPPLE TEST ERROR
11	CHECKSUM ERROR (FORMAT/IPL)
12	INVALID FILL/DUMP DATA ADDRESS
13	RECEIVED MESSAGE INCOMPLETE
14	CPU SELF-TEST ERROR (CRITICAL BITE)
15	INCOMPLETE DEU TRANSMISSION

6 MCDS

SIGNATURE	DATE	NATIONAL AERONAUTICS AND SPACE ADMINISTRATION LYNDON B. JOHNSON SPACE CENTER HOUSTON, TEXAS
DSGN J D HOLMES	7-16-79	
DR		MULTIFUNCTION CRT DISPLAY SYSTEM
ENGR M. MAI		
ENGR [signature]	6/5/96	
APP [signature]	6-9-96	
APP H. J. [signature]	6/4/96	SPACE SHUTTLE
CADS S.K. Kimbrell	6-19-96	ALL
LTR E	PCN 6	126.5 X 34

DWG NO 8.6
PAGE
SHEET 1 OF 1

BASIC REV E-6

T S R Q P O N M L K J

LEFT CRT SEL
RIGHT CRT SEL
CRT 1B
CRT 3A
CRT 3B
CRT 2A
CRT 4A
DEU LOAD
DEU LOAD NOT
PWL C2
ST
SL

ELAPSED TIME INDICATOR (XXXX HRS)
EHI FILTER 28V
GNC
SM
PL
HF SW SELECT DISC
DEU/DU PWR ON DISC

PWR SUP
DC/DC CONVERTER
+14V
-7V
VOLTAGE REGULATOR NO 1
+12V AT 3A
-5V AT 5A
TO MEMORY AND I/O CIRCUITS
+17V
-17V
VOLTAGE REGULATOR NO 2
FILTER +15V
FILTER -15V
TO ANALOG CIRCUITS
-15V
VOLTAGE REGULATOR NO 3
-12V AT 1A
+5V AT 18A
TO I/O AND DIGITAL CIRCUITS
+5 SENSE
FILTER +5V
TO ANALOG CIRCUITS
PULSE WIDTH CONTROL
START
+12V
-6V
INTERNAL VOLTAGE MODULE
+40V
+12V
+5V
-6V
POWER ON INTERRUPT
+5V LOOP CONTROL
VOLTAGE MONITORS
+12V
-12V
+15V
-15V
-5V
PWR ON/OFF CNTL
POWER SUPPLY ERROR (OVER/UNDER VOLTAGE)
STORE COMPLETE
INHIBIT MAIN STORE
DU PWR ON DISC

POWER ON INTERRUPT
XMIT END
MEMORY PARITY ERROR
SEV MASK
SEV REG
S
E=0
V
KBA-A ERROR
KBA-B ERROR

BIT NO | HARDWARE STATUS REGISTER NO 2
0 LOGIC 1
1-7 SPARE
8 CPU SOFTWARE FAIL
9 KBA-A ERROR (CRITICAL BITE)
10 KBA-B ERROR (CRITICAL BITE)
11 MIA ECHO CHECK ERROR
12 MIA PARITY ERROR
13 MIA MANCHESTER ERROR
14 MIA BIT COUNT ERROR
15 MIA CMD ERROR (OR OF 12-14)

PROM FOR INITIALIZATION

FUNCTION	WORDS
LOAD PATTERN	22
MODE STATUS	12
BITE STATUS	20
MEMORY FILL	16
MEMORY DUMP	34
MASTER RESET	6
SUM CHECK	10
DECODE LOGIC	15
SEQUENCING LOGIC	30
HARDWARE OVERHEAD	10
LOW CORE	25
TOTAL	200

IPL HAS BEEN PERFORMED
IPL ERROR
IPL CIRCUIT CHECK ERROR

BIT NO | HARDWARE STATUS REGISTER NO 1 (SOFTWARE READS REGISTER TO FORM HARDWARE STATUS WORD 1 FOR POLL RESPONSE)
0 LOGIC 1
1 IPL HAS BEEN PERFORMED (DEU UNDER PROM CONTROL)
2 IPL ERROR (DETECTED BY PROM OR CYCLIC CIRCUIT CHECK)
3 IPL CIRCUIT CHECK ERROR (NOT USED)
BITS 0-3

BIT NO | HARDWARE STATUS REGISTER NO 3
0 LOGIC 1
1 DU DEFLECTION ERROR
2 DU VIDEO ERROR
3 DU PHOS PROTECT (NOT USED)
4 SPARE
5 DU FILAMENT ERROR
6 DU TEMPERATURE ERROR
7-14 SPARE
15 DU POWER SUPPLY ERROR

CPU SOFTWARE FAIL
SEV MASK
CPU MEMORY PARITY ERROR
DISPLAY WRAP ERROR
RC TIMERS (2)
INITIALIZE DATA FLOW
INITIALIZE TEST
CPU GOOD
DISPLAY WRAP GOOD
CPU MEMORY PARITY ERROR (BIT 15 OF HARDWARE STATUS WORD)
RESET STATUS REGISTER
READ STATUS REGISTERS
BITE STATUS DATA
RESET CONTROL

MSS KEYBOARD
LEFT KEYBOARD
RIGHT KEYBOARD
SW 32
SW 2
SW 1 (TYP 1 OF 32)
CHAN A
CHAN B
KEYBOARD IS WIRED SUCH THAT A SINGLE SIGNAL WIRE FAILURE WILL CAUSE LOSS OF NO MORE THAN ONE KEY'S FUNCTION TO ITS KEYBOARD ADAPTER
RETURN
TO DEU 4 ADAPTER A (32 LINES)
TO DEU 1 ADAPTER B (32 LINES)
TO DEU 3 ADAPTER B (32 LINES)
TO DEU 3 ADAPTER A (32 LINES)
TO DEU 2 ADAPTER A (32 LINES)
TO DEU 4 GRD (2 LINES)
TO DEU 1 GRD (2 LINES)
TO DEU 3 GRD (2 LINES)
TO DEU 3 GRD (2 LINES)
TO DEU 2 GRD (2 LINES)
A SINGLE BREAK IN ONE GRD WIRE WILL CAUSE NO LOSS OF FUNCTION

FAULT SUMM	SYS SUMM	MSG RESET	ACK
CPC/CRT	A	B	C
I/O RESET	D	E	F
ITEM	1	2	3
EXEC	4	5	6
OPS	7	8	9
SPEC	—	0	+
RESUME	CLEAR	•	PRO

KB ADAPTER A
1 MHZ CLOCK
PUSHBUTTON DETECT
DEBOUNCE (4 MILLI-SECOND DELAY)
RESET
BITE (9 MILLI-SECOND TIMEOUT)
RESET CONTROL
BREAK-IN
KEY DEPRESSION
STROBE
32 SWITCH RECEIVERS
4 ENCODERS (8→3)
CLR
3 REGISTERS (4 BITS EACH)
12 TRI-STATE BUS DRIVERS
+V

KB ADAPTER B
BITE (9 MILLI-SECOND TIMEOUT)
RESET
RESET CONTROL
DEBOUNCE (4 MILLI-SECOND DELAY)
1 MHZ CLOCK
PUSHBUTTON DETECT
BREAK-IN
KEY DEPRESSION
STROBE
12 TRI-STATE BUS DRIVERS
CLR
3 REGISTERS (4 BITS EACH)
4 ENCODERS (8→3)
32 SWITCH RECEIVERS
+V

MIA
RESET
XMIT DATA AVAILABLE
TRANSMIT ENABLE
DATA BUS BUSY
RECEIVER ENABLE
XMIT ENABLE AND XMIT DATA AVAILABLE CONTROLS
PARITY ERROR
MANCHESTER ERROR
BIT COUNT ERROR
ECHO CHECK ERROR
CMD ERROR
RECEIVE NRZ DATA
RCVR SHIFT CLOCK
BIT COUNT
NONVALID
MANCHESTER PARITY ERROR
RCV CMD SYNC
END OF WORD
RECEIVE DATA BUS ACTIVE
XMIT SHIFT CLK
XMIT NRZ DATA
RECEIVER
MANCHESTER TO NRZ AND VALIDATION
TIMING AND CONTROL
TIMING AND CONTROL LOGIC
ERROR CHECK CONTROLS/WRAP REGISTER CONTROL
WORD COUNTER/ MULTIPLEXER
9 BITS
SEV BITS (101)
DEU IUA
REGISTER 1 AND CONTROLS
5 BITS
ADDRESS COMPARE
DEU ADDRESS ID
REGISTER 2 AND CONTROLS
REGISTER 3 AND CONTROLS
SEV
TRANSMITTER
NRZ TO MANCHESTER PLUS PARITY AND SYNC
BREAK-IN AND INTERRUPT CONTROLS
DATA FLOW INTERFACE
2 MHZ (CL)
TRANSMIT CMD SYNC
+5V
16 MHZ
STRAP BACK MIA ID CODE ID
LSB
MSB
DBC
DK 4
DK 1
DK 2
DK 3

MIA DATA IN
DISCRETE DATA IN
MF SW SEL DISC
DISCRETE INPUT CONTROL
RIGHT ADAPTER KB WORD B BREAK-IN
LEFT ADAPTER KB WORD A BREAK-IN
KB DATA TRANSFER READY (STROBE)
DISCRETE DATA IN BREAK-IN
MIA DATA OUT BREAK-IN
MIA DATA IN BREAK-IN
CMD WORD STORED INTERRUPT
LAST WORD RECEIVED INTERRUPT
LAST WORD TRANSMITTED INTERRUPT
MIA ADAPTER WRAP BREAK-IN
POWER ON INTERRUPT (POI)

TRANSMIT DIRECT OUT
RECEIVER ENABLE
KB DATA IN
MIA DATA OUT
CENTRAL PROCESSING UNIT
GATE CONTROL SIGNALS
DISPLAY REFRESH DATA ADDRESS
DSPLY REFRESH DATA (FORMAT CNTL WORDS)
DISPLAY REFRESH DATA
MIA DATA OUT
KB DATA IN
MIA DATA IN
DISCRETE DATA IN
STORE COMPLETE
DATA FLOW GATES
PRIORITY:
1. MIA DATA
2. DISPLAY REFRESH
3. DISCRETE DATA (MAJ FUNC)
4. KEYBOARD DATA
HARDWARE ADDRESSES
GATE CONTROL SIGNALS
ACKNOWLEDGE
DISPLAY DATA BREAK-IN
SYMBOL GENERATOR MEMORY ACCESS CONTROL
KEYBOARD AND DISCRETE MEMORY ACCESS CONTROL
MIA MEMORY ACCESS CONTROL
MIA ADAPTER WRAP ERROR AND POWER ON INTERRUPT AND TIMER INTERRUPT MEMORY ACCESS CONTROL
ADDR
DATA ADDRESS REGISTER 16 BITS
POI LATCH

MEMORY 8192 WORDS X 16 BITS EACH

STARTING ADDRESS	MEMORY ALLOCATION	NO OF 16 BIT WORDS
0	LOW CORE	256
256	(CRITICAL) FORMAT BUFFER	3656
3912	FORMAT CHECKSUM	1
3913	DEU CONTROL PROGRAM	2675
6588	MESSAGE LINE BUFFER	50
6638	DISPLAY BUFFER	1527
8165	I/O BUFFER	27
	TOTAL	8192

24 MHZ OSCILLATOR
RC TIMER
COUNT DOWN
1 MHZ
16 MHZ
CPU AND MEMORY CLOCKS
12 MHZ (MEMORY)
8 MHZ (CPU)
16 MHZ (MIA)
REFRESH COUNTER
TIMER INTERRUPT (18 MS)
TIMER INTERRUPT (18 MS)
OSCILLATOR ERROR
REQUEST LOGIC 55 HZ
REFRESH ERROR
SYMBOL GEN REFRESH BUS ACTIVE STATUS (NOMINALLY ACTIVE)

FEATURE CONTROL 10 BITS
TO SYMBOL GENERATOR
SIN/COS PARITY
ROTATION CONTROL 12 BITS
POSITION CONTROL 11 BITS
CHARACTER CONTROL 14 BITS
CIRCLE GEN CONTROL 10 BITS
VECTOR GEN CONTROL 12 BITS
X Y TRANSLATE CONTROL 11 BITS
ANALOG CONTROL 9 BITS
REPEAT CONTROL 11 BITS
INTENSITY CONTROL 7 BITS
INTENSITY PARITY ERROR

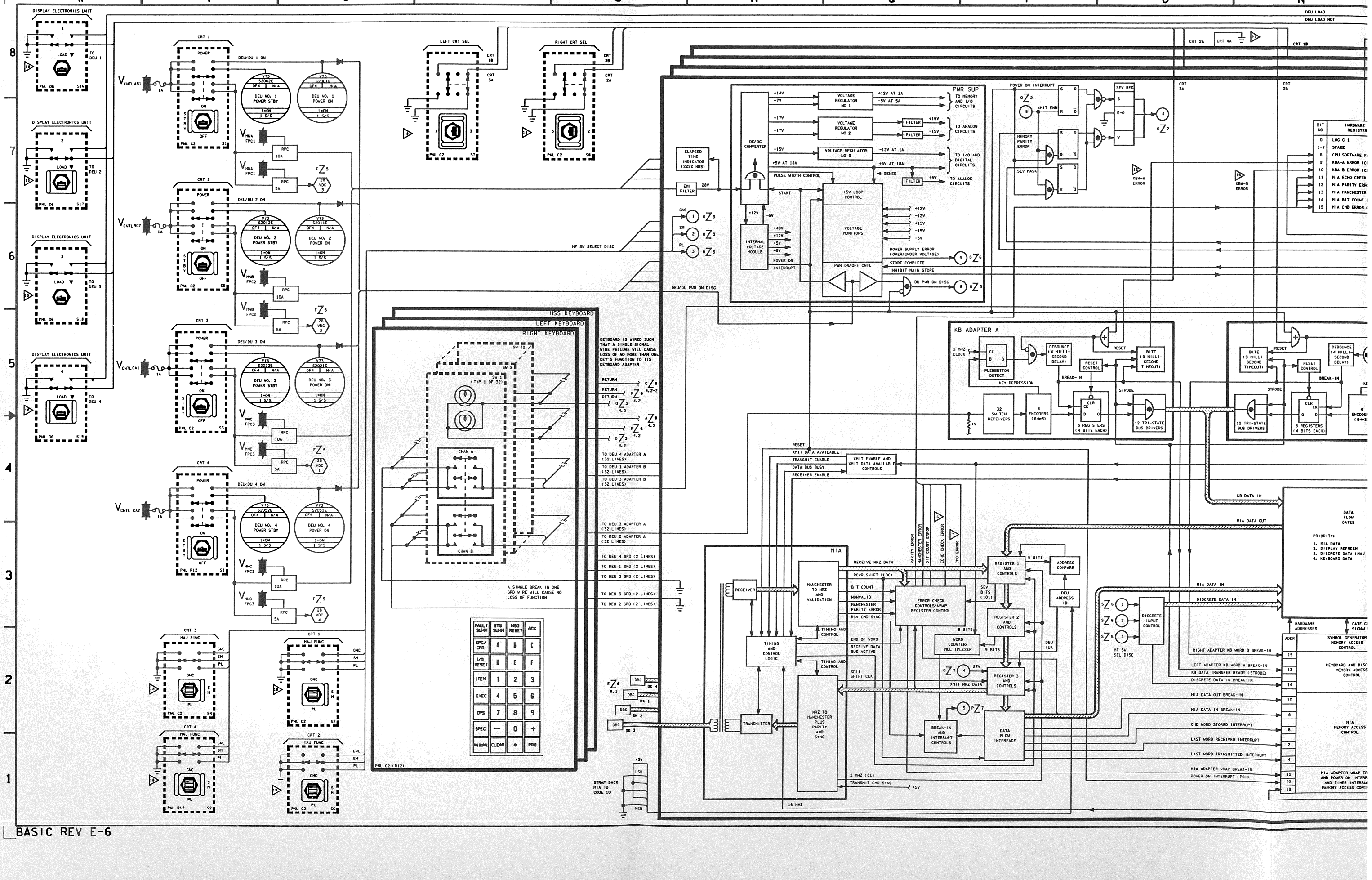
DISPLAY ELECTRONICS UNIT
LOAD
TO DEU 1
TO DEU 2
TO DEU 3
TO DEU 4
PNL 06 S16
PNL 06 S17
PNL 06 S18
PNL 06 S19
CRT 1
CRT 2
CRT 3
CRT 4
POWER
ON
OFF
STBY
PNL C2 S1
PNL C2 S5
PNL C2 S3
PNL R12 S1
DEU/DU 1 ON
DEU/DU 2 ON
DEU/DU 3 ON
DEU/DU 4 ON
V CNTL A B1
V CNTL B C2
V CNTL C A1
V CNTL C A2
1A
V733 S2002E DF4 N/A
DEU NO. 1 POWER STBY
1=ON 1 S/S
V733 S2001E DF4 N/A
DEU NO. 1 POWER ON
V733 S2012E DF4 N/A
DEU NO. 2 POWER STBY
V733 S2013E DF4 N/A
DEU NO. 2 POWER ON
V733 S2022E DF4 N/A
DEU NO. 3 POWER STBY
V733 S2021E DF4 N/A
DEU NO. 3 POWER ON
V733 S2052E DF4 N/A
DEU NO. 4 POWER STBY
V733 S2051E DF4 N/A
DEU NO. 4 POWER ON
V MNA FPC1
V MNB FPC2
V MNC FPC3
RPC 10A
RPC 5A
28 VDC
LEFT CRT SEL
RIGHT CRT SEL
CRT 1B
CRT 3A
CRT 3B
CRT 2A
CRT 2A
CRT 4A
CRT 1B
HF SW SELECT DISC
DEU/DU PWR ON DISC
ELAPSED TIME INDICATOR (XXXX HRS)
EMI FILTER
28V
DC/DC CONVERTER
PULSE WIDTH CONTROL
START
+14V
-7V
+17V
-17V
-15V
+5V AT 18A
+12V
-6V
INTERNAL VOLTAGE MODULE
+40V
+12V
+5V
-6V
POWER ON INTERRUPT
VOLTAGE REGULATOR NO 1
+12V AT 3A
-5V AT 5A
VOLTAGE REGULATOR NO 2
FILTER
+15V
-15V
VOLTAGE REGULATOR NO 3
-12V AT 1A
+5V AT 18A
+5 SENSE
FILTER
+5V
PWR SUP
TO MEMORY AND I/O CIRCUITS
TO ANALOG CIRCUITS
TO I/O AND DIGITAL CIRCUITS
TO ANALOG CIRCUITS
+5V LOOP CONTROL
VOLTAGE MONITORS
+12V
-12V
+15V
-15V
-5V
PWR ON/OFF CNTL
POWER SUPPLY ERROR (OVER/UNDER VOLTAGE)
STORE COMPLETE
INHIBIT MAIN STORE
DU PWR ON DISC
POWER ON INTERRUPT
XMIT END
SEV REG
E=0
MEMORY PARITY ERROR
SEV MASK
KBA-A ERROR
KBA-B ERROR
BIT NO
HARDWARE REGISTER
0 LOGIC 1
1-7 SPARE
8 CPU SOFTWARE F/
9 KBA-A ERROR (C
10 KBA-B ERROR (C
11 MIA ECHO CHECK
12 MIA PARITY ERR
13 MIA MANCHESTER
14 MIA BIT COUNT
15 MIA CMD ERROR (
DEU LOAD
DEU LOAD NOT
MSS KEYBOARD
LEFT KEYBOARD
RIGHT KEYBOARD
SW 1 (TYP 1 OF 32)
SW 32
CHAN A
CHAN B
KEYBOARD IS WIRED SUCH THAT A SINGLE SIGNAL WIRE FAILURE WILL CAUSE LOSS OF NO MORE THAN ONE KEY'S FUNCTION TO ITS KEYBOARD ADAPTER
RETURN
TO DEU 4 ADAPTER A (32 LINES)
TO DEU 1 ADAPTER B (32 LINES)
TO DEU 3 ADAPTER B (32 LINES)
TO DEU 3 ADAPTER A (32 LINES)
TO DEU 2 ADAPTER A (32 LINES)
TO DEU 4 GRD (2 LINES)
TO DEU 1 GRD (2 LINES)
TO DEU 3 GRD (2 LINES)
TO DEU 3 GRD (2 LINES)
TO DEU 2 GRD (2 LINES)
A SINGLE BREAK IN ONE GRD WIRE WILL CAUSE NO LOSS OF FUNCTION
FAULT SUMM
SYS SUMM
MSG RESET
ACK
GPC/ CRT
I/O RESET
ITEM
EXEC
OPS
SPEC
REBUME
CLEAR
PRO
PNL C2 (R12)
DBC DK 4
DBC DK 1
DBC DK 2
DBC DK 3
+5V
LSB
MSB
STRAP BACK MIA ID CODE 10
KB ADAPTER A
1 MHZ CLOCK
PUSHBUTTON DETECT
KEY DEPRESSION
DEBOUNCE (4 MILLI-SECOND DELAY)
RESET CONTROL
BREAK-IN
BITE (9 MILLI-SECOND TIMEOUT)
STROBE
32 SWITCH RECEIVERS
4 ENCODERS (8=>3)
3 REGISTERS (4 BITS EACH)
12 TRI-STATE BUS DRIVERS
RESET
XMIT DATA AVAILABLE
TRANSMIT ENABLE
DATA BUS BUSY
RECEIVER ENABLE
XMIT ENABLE AND XMIT DATA AVAILABLE CONTROLS
KB DATA IN
MIA DATA OUT
DATA FLOW GATES
PRIORITY=
1. MIA DATA
2. DISPLAY REFRESH
3. DISCRETE DATA (MAJ
4. KEYBOARD DATA
MIA
RECEIVE NRZ DATA
RCVR SHIFT CLOCK
BIT COUNT
NONVALID
MANCHESTER PARITY ERROR
RCV CMD SYNC
TIMING AND CONTROL
END OF WORD
RECEIVE DATA BUS ACTIVE
XMIT SHIFT CLK
XMIT NRZ DATA
2 MHZ (CL)
TRANSMIT CMD SYNC
16 MHZ
RECEIVER
TRANSMITTER
MANCHESTER TO NRZ AND VALIDATION
TIMING AND CONTROL LOGIC
NRZ TO MANCHESTER PLUS PARITY AND SYNC
ERROR CHECK CONTROLS/WRAP REGISTER CONTROL
WORD COUNTER/ MULTIPLEXER
9 BITS
BREAK-IN AND INTERRUPT CONTROLS
DATA FLOW INTERFACE
REGISTER 1 AND CONTROLS
REGISTER 2 AND CONTROLS
REGISTER 3 AND CONTROLS
5 BITS
ADDRESS COMPARE
DEU ADDRESS ID
DEU IUA
SEV BITS (101)
PARITY ERROR
MANCHESTER ERROR
BIT COUNT ERROR
ECHO CHECK ERROR
CMD ERROR
DISCRETE INPUT CONTROL
MF SW SEL DISC
MIA DATA IN
DISCRETE DATA IN
HARDWARE ADDRESSES
GATE C SIGNAL
ADDR
SYMBOL GENERATOR MEMORY ACCESS CONTROL
KEYBOARD AND DISC MEMORY ACCESS CONTROL
MIA MEMORY ACCESS CONTROL
MIA ADAPTER WRAP ER AND POWER ON INTERR AND TIMER INTERRU MEMORY ACCESS CONTR
RIGHT ADAPTER KB WORD B BREAK-IN
LEFT ADAPTER KB WORD A BREAK-IN
KB DATA TRANSFER READY (STROBE)
DISCRETE DATA IN BREAK-IN
MIA DATA OUT BREAK-IN
MIA DATA IN BREAK-IN
CMD WORD STORED INTERRUPT
LAST WORD RECEIVED INTERRUPT
LAST WORD TRANSMITTED INTERRUPT
MIA ADAPTER WRAP BREAK-IN
POWER ON INTERRUPT (POI)

BASIC REV E-6

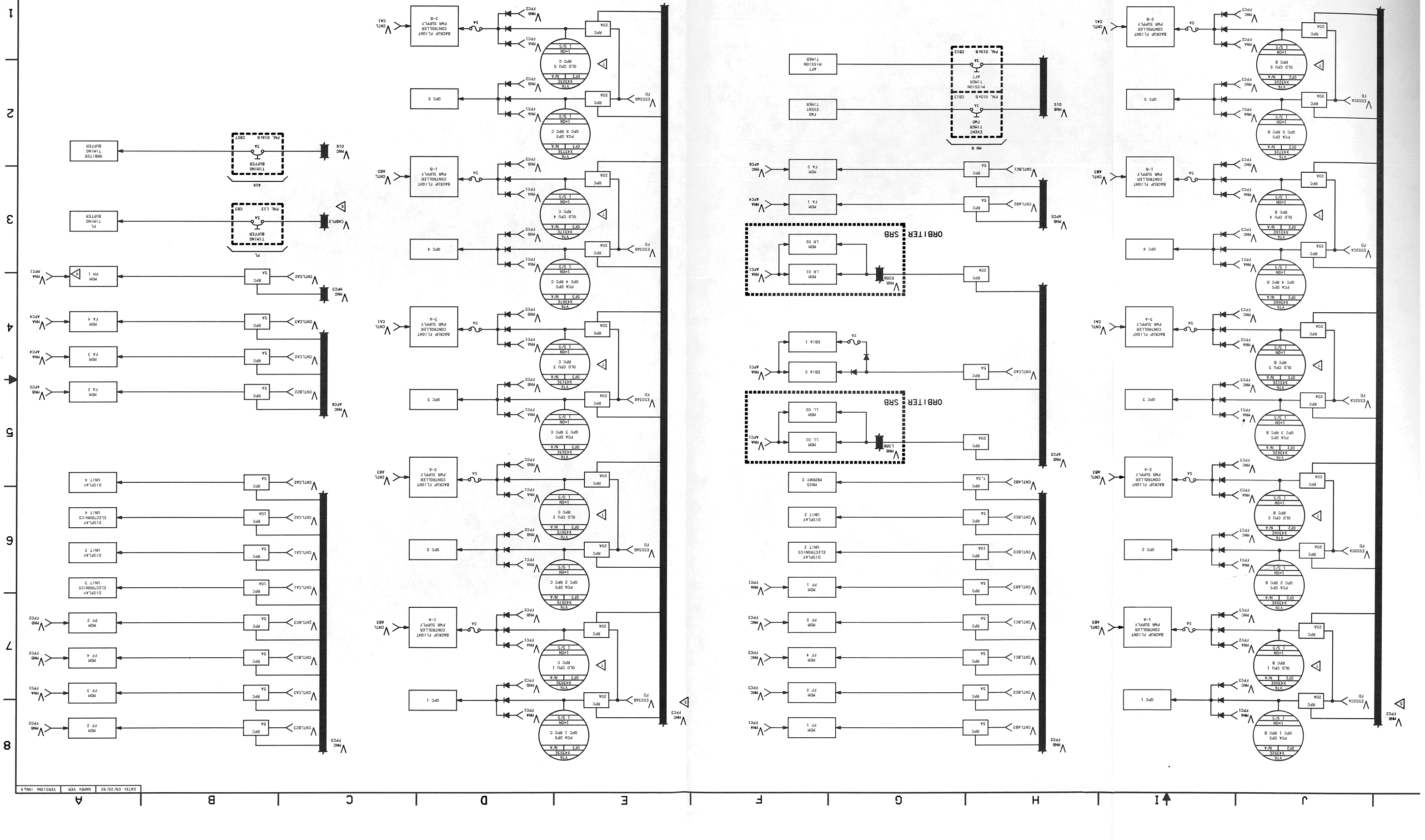
ORBITER SRB
ORBITER SRB
AUX
PL
BACKUP FLIGHT CONTROLLER PWR SUPPLY 2-B
BACKUP FLIGHT CONTROLLER PWR SUPPLY 1-B
BACKUP FLIGHT CONTROLLER PWR SUPPLY 3-A
BACKUP FLIGHT CONTROLLER PWR SUPPLY 2-A
BACKUP FLIGHT CONTROLLER PWR SUPPLY 1-A
OLD CPU 5 RPC B
OLD CPU 4 RPC B
OLD CPU 3 RPC B
OLD CPU 2 RPC B
OLD CPU 1 RPC B
OLD CPU 5 RPC C
OLD CPU 4 RPC C
OLD CPU 3 RPC C
OLD CPU 2 RPC C
OLD CPU 1 RPC C
PCA DPS GPC 5 RPC B
PCA DPS GPC 4 RPC B
PCA DPS GPC 3 RPC B
PCA DPS GPC 2 RPC B
PCA DPS GPC 1 RPC B
PCA DPS GPC 5 RPC C
PCA DPS GPC 4 RPC C
PCA DPS GPC 3 RPC C
PCA DPS GPC 2 RPC C
PCA DPS GPC 1 RPC C
GPC 5
GPC 4
GPC 3
GPC 2
GPC 1
MDM FA 1
MDM FA 2
MDM FA 3
MDM FA 4
MDM LR 01
MDM LR 02
MDM LL 01
MDM LL 02
MDM PF 1
MDM PF 2
MDM PF 3
MDM PF 4
MDM PM 1
MDM PM 2
MDM PM 3
MDM PM 4
DBIA 1
DBIA 2
MASS MEMORY 2
DISPLAY UNIT 2
DISPLAY ELECTRONICS UNIT 2
DISPLAY UNIT 3
DISPLAY ELECTRONICS UNIT 3
DISPLAY UNIT 4
DISPLAY ELECTRONICS UNIT 4
AFT MISSION TIMER
FWD EVENT TIMER
AFT MISSION TIMER
FWD EVENT TIMER
ORBITER TIMING BUFFER
PL TIMING BUFFER
ORBITER TIMING BUFFER
RPC
20A
10A
5A
3A
2A
7.5A
1 S/S
1=ON
N/A
OF2
OF3
ESSSAB FD
ESSSCA FD
CNTL A1
CNTL A3
CNTL AB3
CNTLAB1
CNTLAB2
CNTLAB3
CNTLBC1
CNTLBC2
CNTLBC3
CNTLCA1
CNTLCA2
CNTLCA3
PNL 015A C1
PNL 015A C2
PNL 015A C3
PNL 015A C4
PNL 015B C12
PNL 015B C13
PNL L12
PNL 015B C83
PNC FPC1
PNC FPC2
PNC FPC3
PNA FPC1
PNA FPC2
PNA FPC3
PNA APC1
PNA APC2
PNA APC3
PNA APC4
PNA APC5
PNB APC6
PNB APC5
PNB APC4
PNB APC3
PNB APC2
PNB APC1
PNB FPC3
PNB FPC2
PNB FPC1
PNC APC6
PNC APC5
PNC APC4
PNC APC3
PNC APC2
PNC APC1
PNC FPC3
PNC FPC2
PNC FPC1
PNA APC1
PNA APC2
PNA APC3
PNA APC4
PNA APC5
PNA FPC1
PNA FPC2
PNA FPC3
PNB APC1
PNB APC2
PNB APC3
PNB APC4
PNB APC5
PNB FPC1
PNB FPC2
PNB FPC3
PNC APC1
PNC APC2
PNC APC3
PNC APC4
PNC APC5
PNC FPC1
PNC FPC2
PNC FPC3

DATE	NAME	VERSION
DATE= 08/31/92	NAME= SEW	VERSION= BPT= 7
DATE= 09/09/92	NAME= JMB	VERSION= BPT= 8
DATE= 09/25/92	NAME= VEM	VERSION= INK= 9

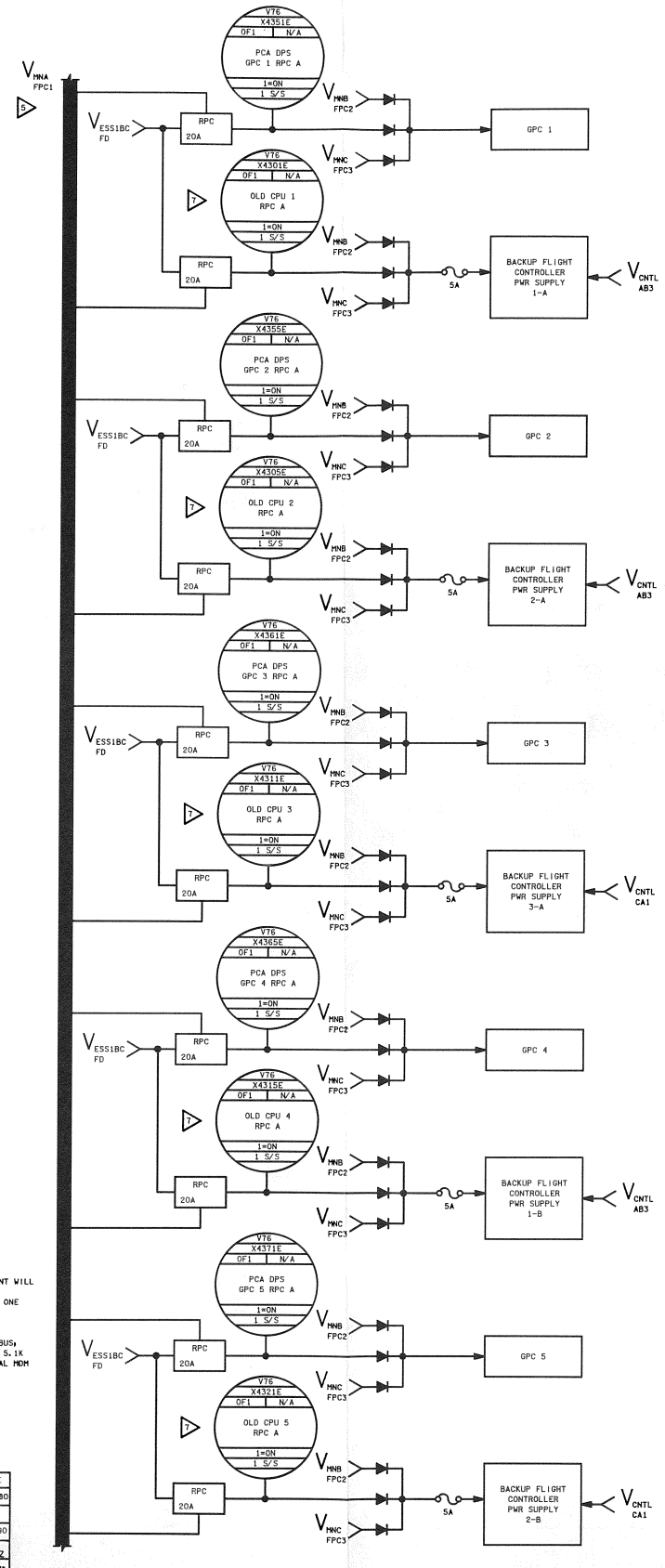

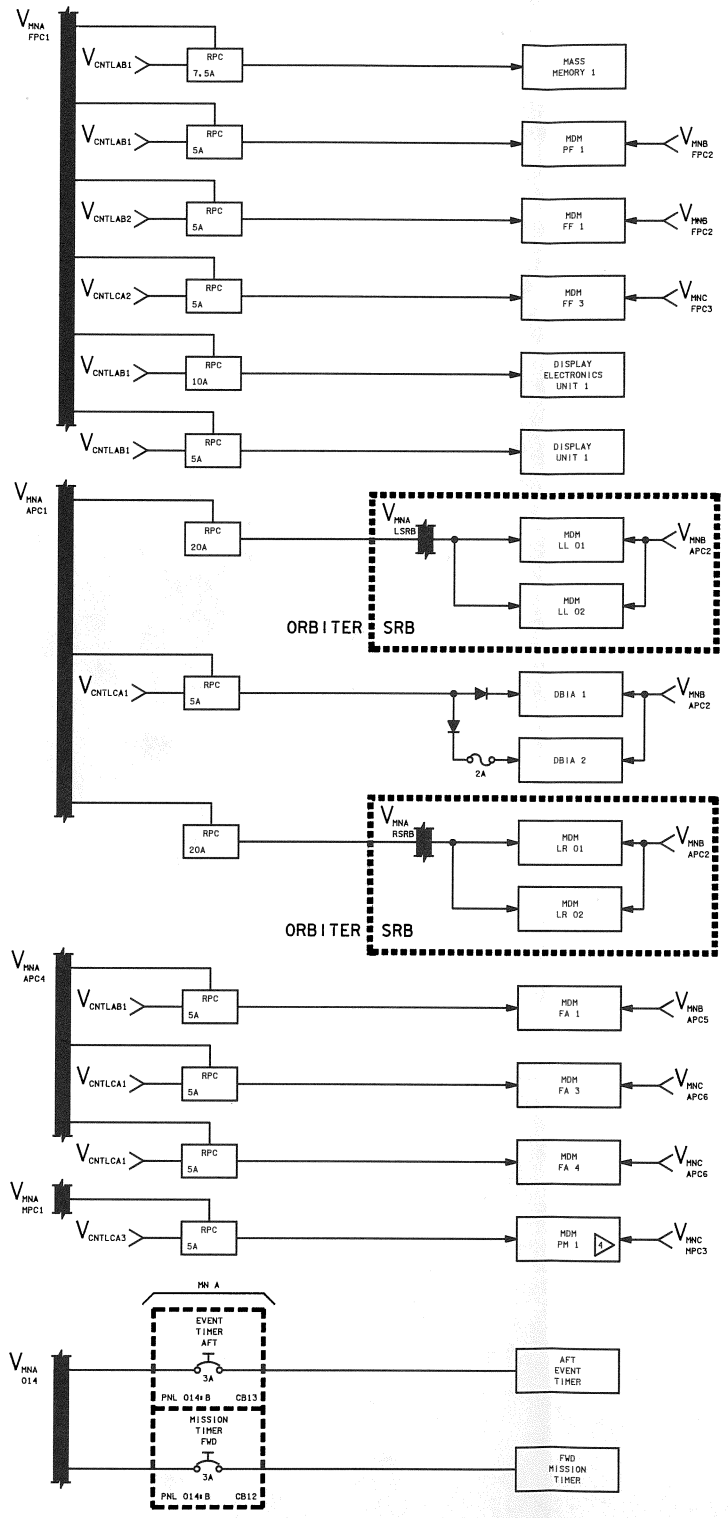

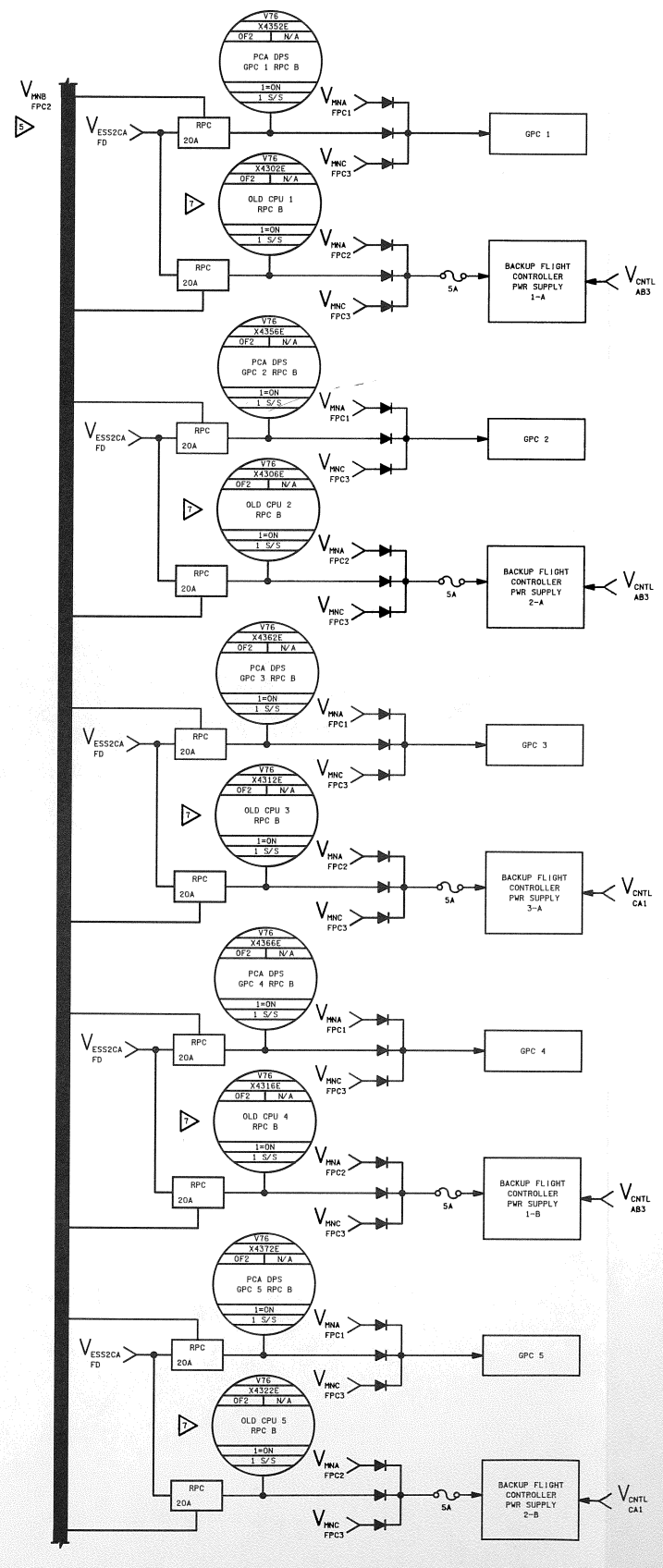

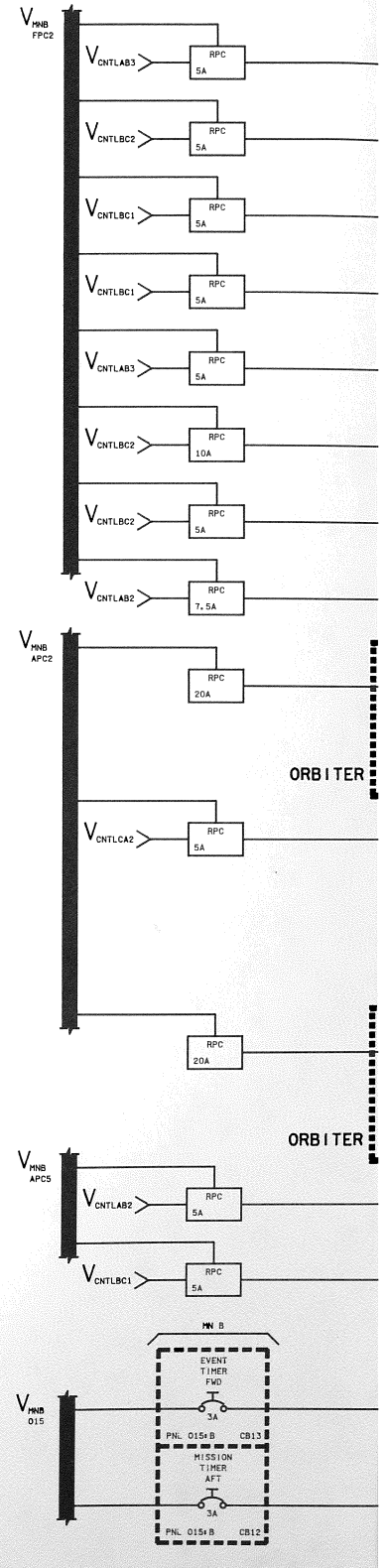

▷ THE TELEMETRY TO THE BFC MODULES CAN BE VIEWED ON MSK 1367 DPS RPC'S 1. THE AP101S GPC'S USE THE OLD IOP POWER FEED. THE OLD CPU RPC'S ONLY SUPPLY POWER TO THE BFC

V_{MNA}
V_{MNB}
V_{MNC}
V_{CABPL2}

6 POWER TO THIS BUS IS PROVIDED BY V_{MNA} MPC1 OR V_{MNB} MPC2 SELECTED VIA A SWITCH (S25) ON PANEL R1

5 THE DIODES ARE PHYSICALLY LOCATED IN THE FPC AS LISTED BELOW

GPC 1	FPC 1
GPC 2	FPC 3
GPC 3	FPC 3
GPC 4	FPC 1
GPC 5	FPC 2

SEE DRAWING 8.11 FOR MORE DETAILS

4 MDM PM 1 DOES NOT CURRENTLY EXIST

3. CAUTION
POWER LOSS DRAWINGS SHOULD NOT BE USED FOR SUBSYSTEM TROUBLESHOOTING OR RECONFIGURATION. FOR DETAILS OF SWITCH WIRING, REFERENCE APPROPRIATE SUBSYSTEM DRAWING

2. THIS IS A BUS LOSS DRAWING. THEREFORE A PIECE OF DPS EQUIPMENT WILL APPEAR AS MANY TIMES AS THERE ARE SUPPLY AND CONTROL BUSSES AFFECTING IT. THE ARTWORK FOR A SWITCH CONTROLLING MORE THAN ONE ESSENTIAL BUS WILL APPEAR WITH EACH CONTACT

NOTES: 1. TELEMETRY BEFORE THE RPC IS SHOWN WITH ASSOCIATED ESSENTIAL BUS; TELEMETRY AFTER THE RPC IS SHOWN WITH ASSOCIATED MAIN BUS; A 5.1K RESISTOR IS BETWEEN THE TELEMETRY PICK OFF AND THE OPERATIONAL MDM

7 DPS PWR 1

NATIONAL AERONAUTICS AND SPACE ADMINISTRATION LYNDON B. JOHNSON SPACE CENTER HOUSTON, TEXAS		SIGNATURE	DATE
DPS ELECTRICAL POWER LOSS		DSGN LINDA DUMIS	4/17/80
		DR	
		ENGR ROBERT J. WALTON	8/24/90
		ENGR Robert Walton	10/9/92
		APP [illegible] D. Simmons	10/9/92
DWG NO 8.7	SPACE SHUTTLE	APP	
	ALL	OMNIPLAN J. E. Cantrell	8-13-92
SHEET 1 OF 3 PAGE	93.5 X 34	LTR E	PCN 2

BASIC REV E-2

DATE: 08/28/92	NAME: VEM	VERSION: BPT.7
DATE: 09/09/92	NAME: JDF	VERSION: BPT.8
DATE: 09/25/92	NAME: JCB	VERSION: INK.7

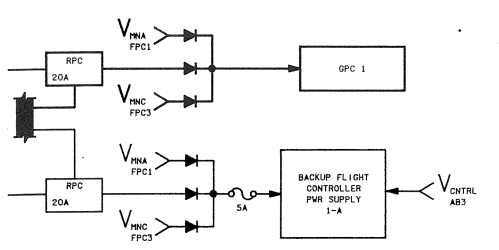

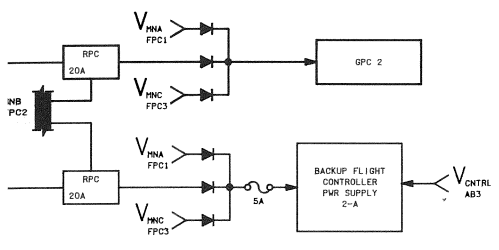

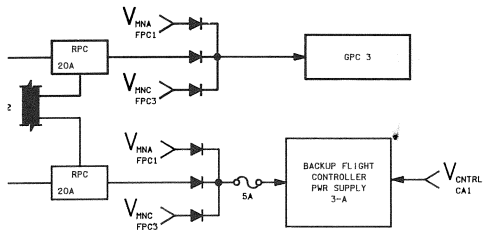

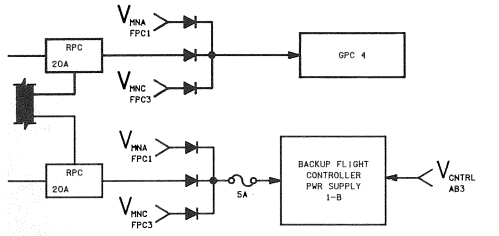

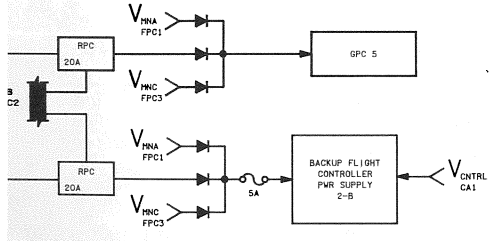

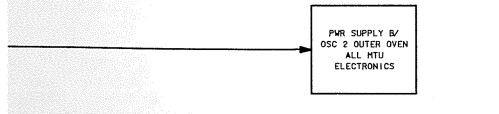

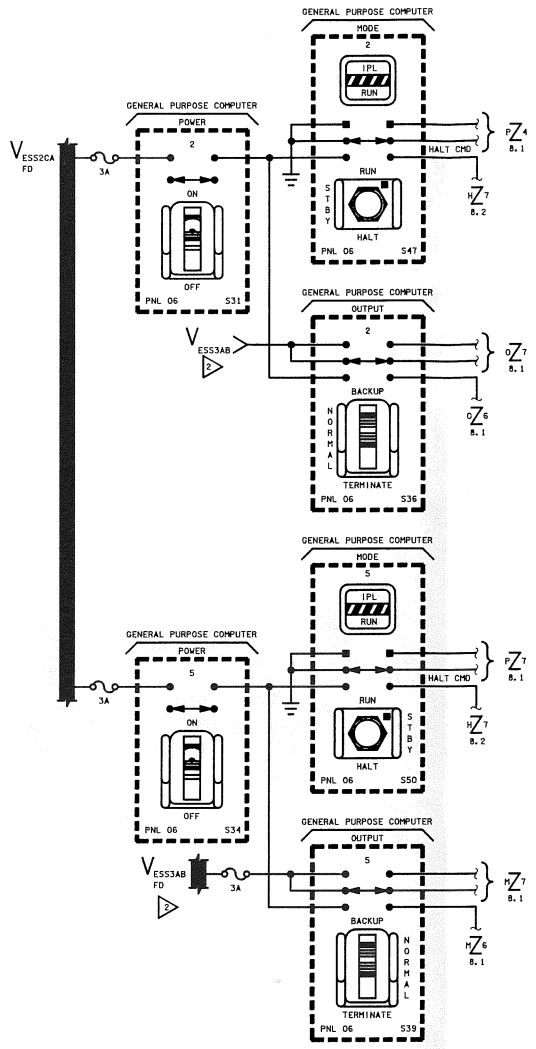

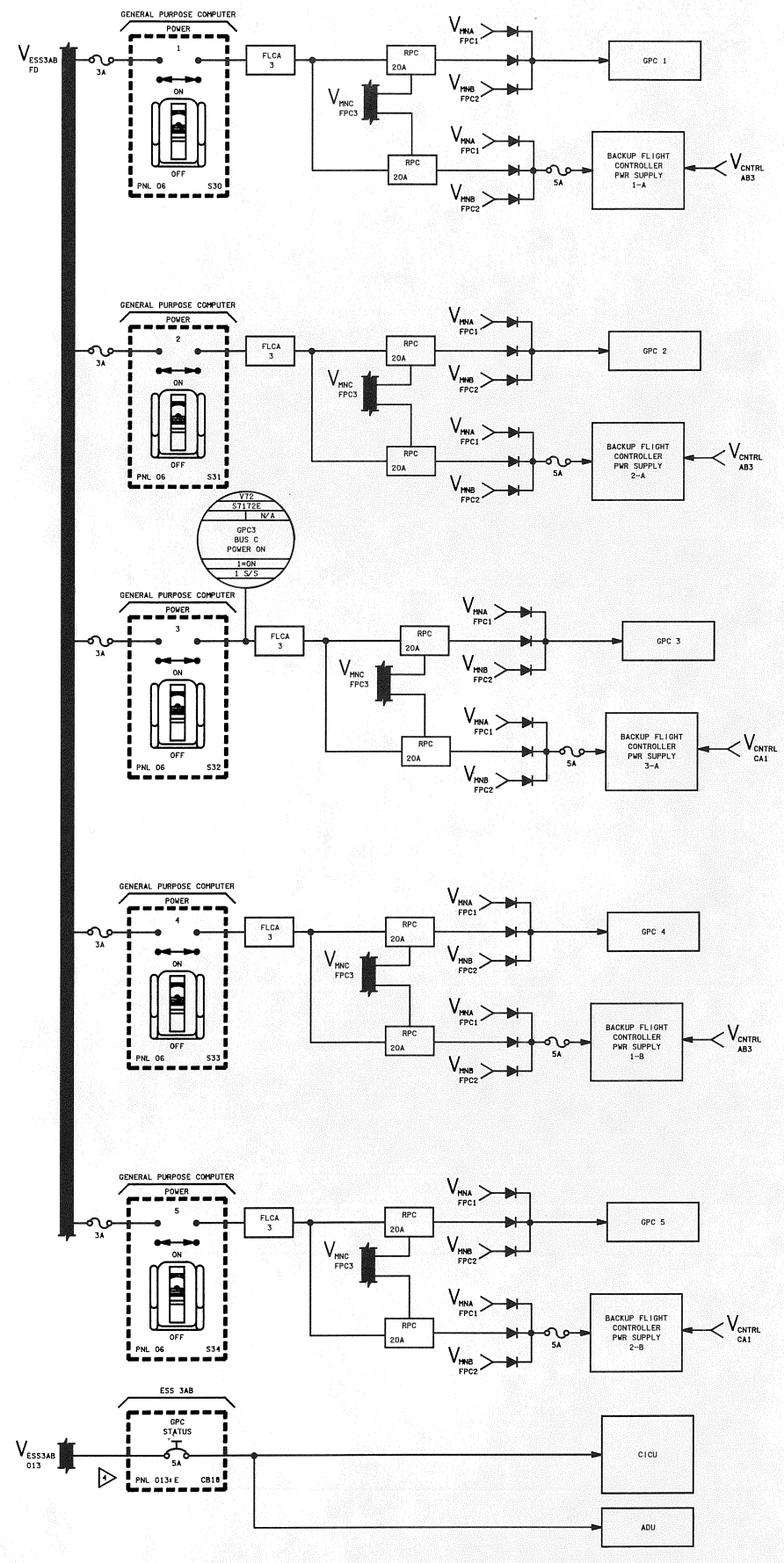

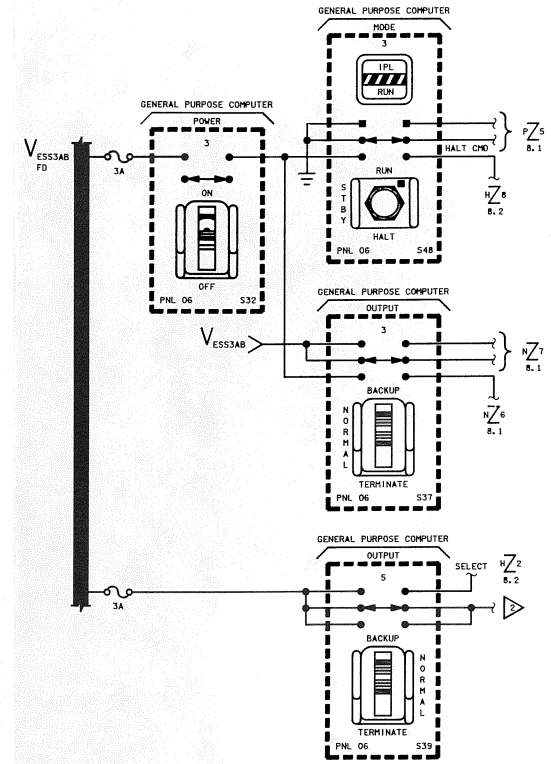

V_{ESS1BC}
V_{ESS2CA}
V_{ESS3AB}

5 SEE DRAWING 8.4 FOR TELEMETRY WIRING DETAILS

4 GPC STATUS CIRCUIT BREAKER IS 3A FOR OV-102

3 CAUTION: POWER LOSS DRAWINGS SHOULD NOT BE USED FOR SUBSYSTEM TROUBLESHOOTING OR RECONFIGURATION

2 V_{ESS3AB} SUPPLIES POWER TO GPC OUTPUT SWITCHES BEGINNING WITH GPC 5 AND CONTINUING ON THRU OUTPUT SWITCH OF GPC 1

NOTES:
1 IMPORTANT: LOSS OF ESS BUS PWR TO GPC POWER SW, RESULTS IN PWR LOSS TO GPC MODE AND TERMINATE FUNCTION OF THE GPC OUTPUT SWITCH

7 DPS PWR 2

SIGNATURE		DATE	NATIONAL AERONAUTICS AND SPACE ADMINISTRATION LYNDON B. JOHNSON SPACE CENTER HOUSTON, TEXAS
DSGN	LINDA DUMIS	6/21/80	
DR			DPS ELECTRICAL POWER LOSS
ENGR	ROBERT J. WALTON	8/24/90	
ENGR	[signature]	10/6/92	
APP	[signature]	10/9/92	
APP			SPACE SHUTTLE / DWG NO 8.7
OMNIPLAN	[signature]	10-13-92	ALL
LTR	E	PCN 2	93.5 X 34 / PAGE / SHEET 2 OF 3

BASIC REV E-2

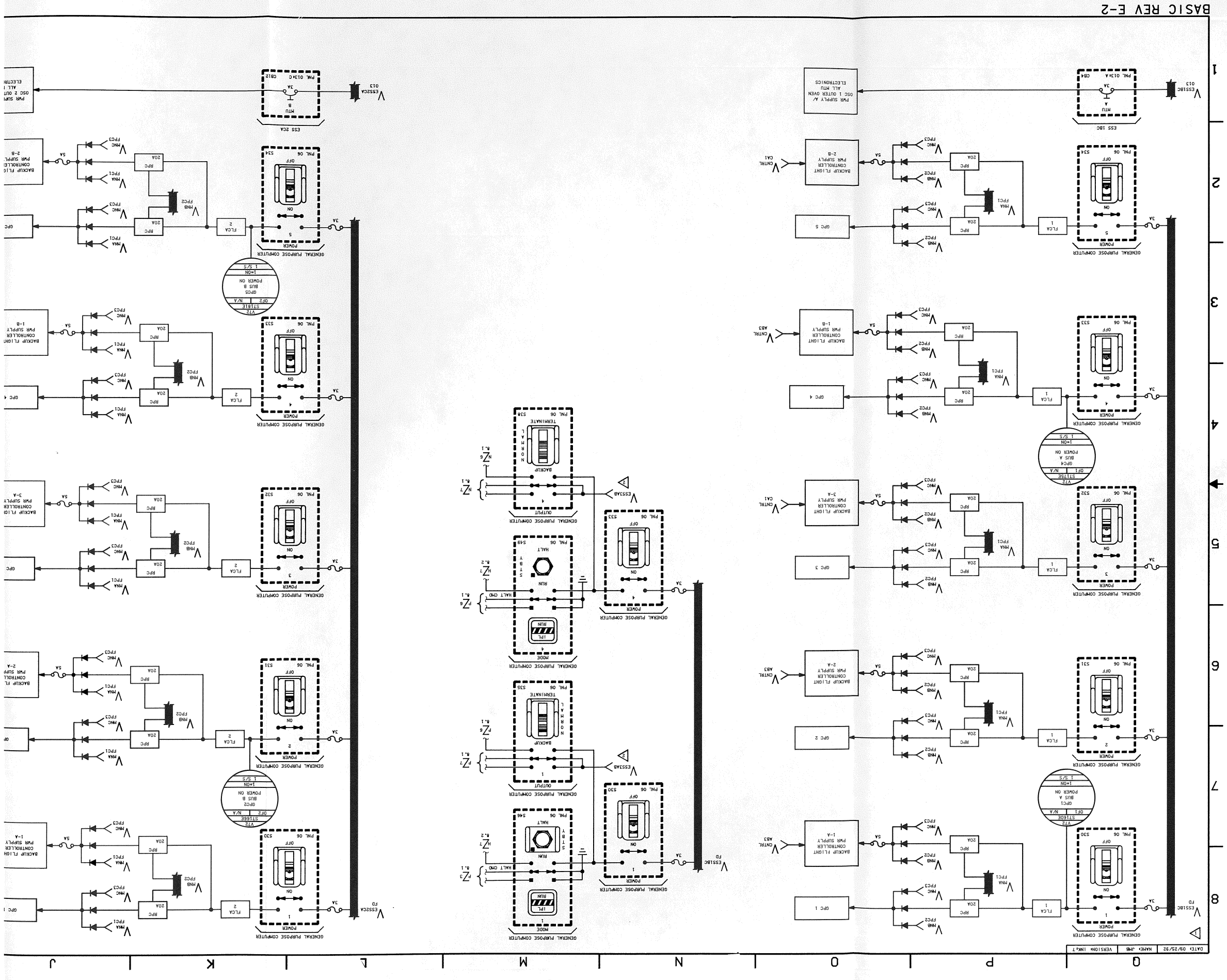
BASIC REV E-2
GENERAL PURPOSE COMPUTER
POWER
BACKUP FLIGHT CONTROLLER PWR SUPPLY 1-A
BACKUP FLIGHT CONTROLLER PWR SUPPLY 1-B
BACKUP FLIGHT CONTROLLER PWR SUPPLY 2-A
BACKUP FLIGHT CONTROLLER PWR SUPPLY 2-B
BACKUP FLIGHT CONTROLLER PWR SUPPLY 3-A
BACKUP FLIGHT CONTROLLER PWR SUPPLY 3-B
PWR SUPPLY A/ OSC 1 OUTER OVEN ALL MTU ELECTRONICS
ESS 1BC
ESS2CA
ESS1BC
ESS3AB
ESS3BC
GPC 1
GPC 2
GPC 3
GPC 4
GPC 5
GPC4 BUS A POWER ON
GPC5 BUS B POWER ON
GENERAL PURPOSE COMPUTER
POWER
BACKUP
TERMINATE
NORMAL
OUTPUT
MODE
HALT
RUN
IPL
STBY
FLCA
RPC
20A
MNA
MNB
MNC
FPC1
FPC2
FPC3
PNL 06
OFF
ON
1 S/S
1=ON
2=ON
3=ON
4=ON
5=ON
6=ON
7=ON
8=ON
9=ON
1
2
3
4
5
6
7
8
J
K
L
M
N
O
P
Q

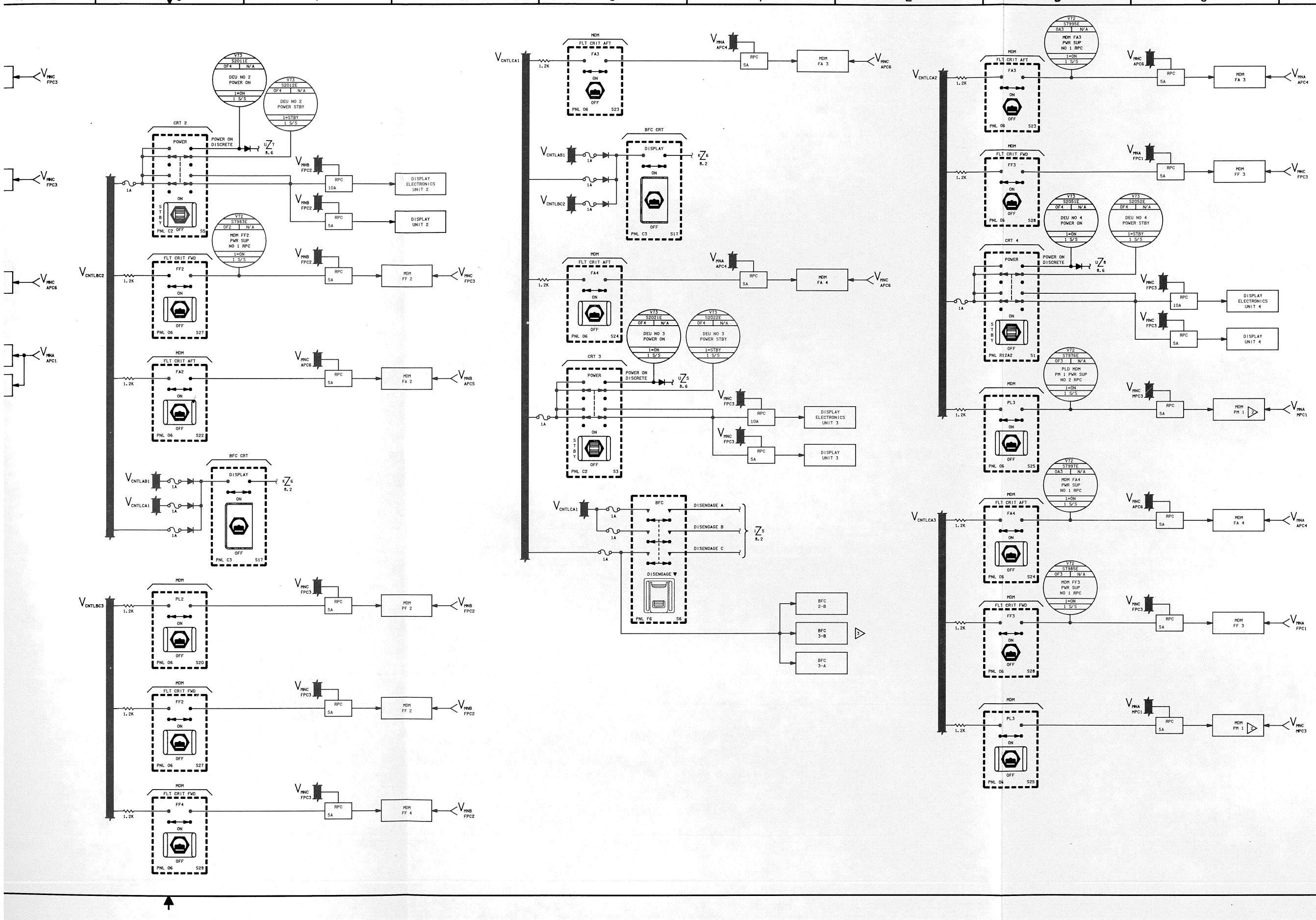

DATE= 09/20/88	NAME= MDU	VERSION= INK=4
DATE= 08/17/90	NAME= LAM	VERSION= BPT=5
DATE= 08/24/90	NAME= MFB	VERSION= INK=5

▷1 CONTROL BUS SUPPLIES POWER ONLY TO SPECIFIC BFC (BACKUP FLIGHT CONTROLLER) ENGAGE LOGIC CIRCUITRY. SEE DRAWING 8.7 DPS POWER 1 FOR MAIN BUS POWER TO BFC MODULES

▷2 MDM-PM 1 DOES NOT CURRENTLY EXIST

NOTES: 1. CAUTION
POWER LOSS DRAWINGS SHOULD NOT BE USED FOR SUBSYSTEM TROUBLESHOOTING OR RECONFIGURATION

7 DPS PWR 3

SIGNATURE		DATE	NATIONAL AERONAUTICS AND SPACE ADMINISTRATION LYNDON B. JOHNSON SPACE CENTER HOUSTON, TEXAS
DSGN	LINDA DUMIS	4/22/80	
DR			
ENGR	ROBERT J. WALTON	8/24/90	DPS ELECTRICAL POWER LOSS
ENGR		9/18/90	
APP		9/18/90	
APP			SPACE SHUTTLE / DWG NO 8.7
OMNIPLAN	S K Kimball 9-9-90		ALL
LTR	E	PCN	104.5 X 34 / PAGE / SHEET 3 OF 3

BASIC REV E

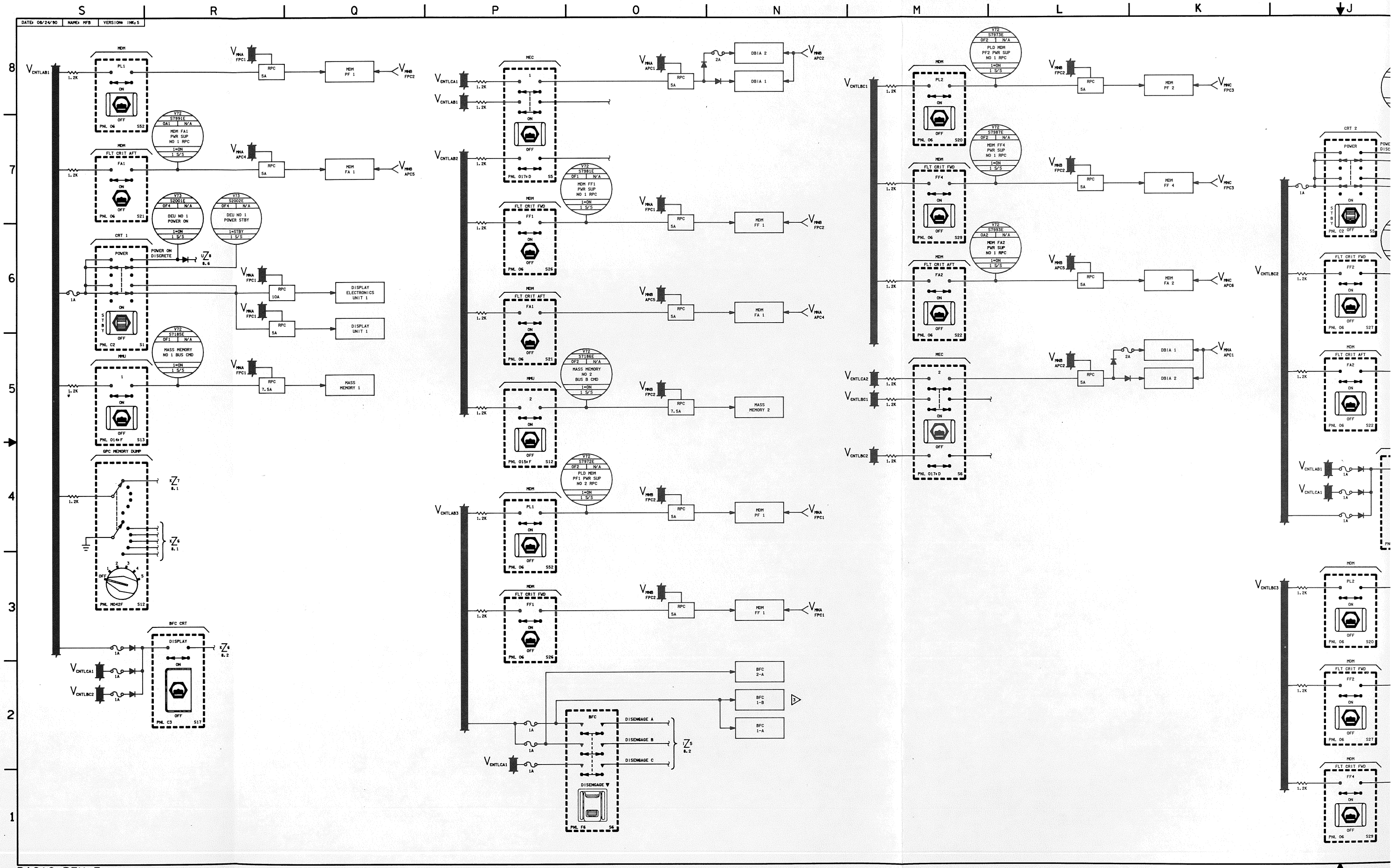

DATE: 08/24/90
NAME: MFB
VERSION: INK.5
MDM
FLT CRIT AFT
CRT 1
POWER
MMU
GPC MEMORY DUMP
BFC CRT
DISPLAY
MEC
FLT CRIT FWD
DISPLAY ELECTRONICS UNIT 1
DISPLAY UNIT 1
MASS MEMORY 1
MASS MEMORY 2
MDM PF 1
MDM FA 1
MDM FF 1
MDM FF 2
MDM FF 4
MDM FA 2
DBIA 1
DBIA 2
BFC 2-A
BFC 1-B
BFC 1-A
BFC
DISENGAGE A
DISENGAGE B
DISENGAGE C
DISENGAGE

BASIC REV E

MULTIPLEXER/DEMULTIPLEXER

SEQUENCE CONTROL UNIT (SCU) 2 (SECONDARY)

SEQUENCE CONTROL UNIT (SCU) 1 (PRIMARY)

A/D CONVERTER 2 (SECONDARY)

A/D CONVERTER 1 (PRIMARY)

CONTROL STORE MEMORY (512-WORD)

CONTROL STORE ADDRESSING LOGIC

SEQUENCE PARITY CHECK LOGIC

SEQ MUX

SEQUENCE FROM FORMAT

INSTRUCTION CONTROL DECODE

BSR READ/LOAD SELECT LOGIC

BUS SELECT DECODE

SCU OUT BUS MERGE

SCU IN BUS MERGE

BSR STATUS REGISTER LOGIC

CONDITION SET DECODE

MEMORY CONTROL LOGIC

SCU BIT TEST

SCU MULTIPLEXER

IOM SELECT LOGIC

IOM REPLY MULTIPLEXER

MDM SYSTEM CLOCK

MDM/IOM CONFIGURATION

DIGITAL RESPONSE DATA WORD FORMAT

CHECK BITS

DATA

CHECK BITS*

01-VALID DATA

10-INVALID SERIAL I/O (PARITY ERROR, NO DATA, IMPROPER SYNC, OR INVALID MNEMONIC)

00,11-ILLEGAL IOM TO SCU TRANSMISSION

CHECK-BIT VERIFICATION

RESPONSE DATA WORD REQUEST FORMAT

CHANNEL ADDRESS | IOM TASK | COMMAND | CHECK BITS

CHECK BITS

COMMAND DATA WORD TRANSFER FORMAT

CHANNEL ADDRESS | IOM TASK | COMMAND DATA | CHECK BITS

IOM TASK*

000 -RESPONSE DATA WORD TRANSFER
001 -COMMAND DATA WORD TRANSFER
010 OR 011-RESET (2.912 SEC ON)
100 OR 110-BIT TEST 1
101 OR 111-BIT TEST 2

COMMAND DATA*

ONE ANALOG SIGNAL, ONE SERIAL DATA WORD, OR 16 DISCRETE SIGNALS

CHECK BITS*

00-EXECUTE OPERATION
01-EXECUTE OTHER-ILLEGAL CODE
NO EXECUTION

MDM STATUS-

ONE INSTR WORD

MDM/IOM CONFIGURATION

MDM	0	1	2	3	4	5	6	7	8	9	10	11	12	13	14	15
FF 1-FF 3	TAC	A1D	DOH	S1O	DIL	DLL	A1S	A0D	DOH	S1O	A1D	DOH	DOL	A1D	DLL	
FF 4	TAC*	A1D	DOH	S1O*	DIL	DLL	A1S	A0D	DOH	S1O	A1D	DOH	DOL*	A1D	DLL	
FA 1-FA 4	TAC	A1D	DOH	A1DX	DIL	DLL	A1S	A0D	DOH	A1D	DOH	DIH	DOL	A1D	DLL	DOH
PF 1	DOL	A1D	DOH	A1S*	DOH	DIH	DOL	DOL*	DOH	DIH	DOH	A1D*	DIL	A0D*	DLL	DOH
PF 2	DOL	A1D	DOH	A1DX	DLL	DIH	DOH	DOH	DOL	DIH	DOH	A1D	DOL	S1O	DIH	DOH
LM 1	DOH	DIL*	DOH	A1S*	DOH	DIH	DOL	DOL	DOH	DIH	DOH	A1D*	DIH*	DOH	DIL*	
LA 1	DOH	DIL*	DOH	A1S*	A0D	DOH	DOL*	DOL*	DOH	DIH	DOH	A1D*	DIH*	DOH	DIL*	
LF 1	DOH	DIL*	DOH	A1S*	A0D	DOH	DOL	DOL	DOH	DIH	DOH	A1D*	DIH*	DOH	DIL*	
FA 1-FA 4	TAC	A0D	DOH	S1O*	DLL	DLL	A1S	A0D	DOH	S1O	A1D	DOH	DOL	A1D	DLL	DOH
FF 4	TAC	A1D	DOH	S1O	DIH	DLL	A1S	A0D	DOH	S1O	A1D	DOH	DOL	A1D	DLL	
FF 1-FF 3	TAC	A1D	DOH	S1O	DIH	DLL	A1S	A0D	DOH	S1O	A1D	DOH	DOL	A1D	DLL	

+ANX'X DUMMY IOM'S USED IN GMC I/O TRANSACTION (+=OUTPUT/-=INPUT)
#IOM'S PRESENT BUT NOT USED

OA 1-OA 3	A1S	DIH	DLL	A1S	DIH	DLL	A1S	DIH	DLL	A1S	DIH	DLL	A1S	DIH	DLL	A1S
OF 4	S1O#	A1S	DLL	A1S	DIH	DLL	A1S	DIH	DLL	A1S	DIH	DLL	A1S	DIH	DLL	A1S
OF 3	S1O#	A1S	DLL	A1S	DIH	DLL	A1S	DIH	DLL	A1S	DIH	DLL	A1S	DIH	DLL	A1S
OF 2	S1O	A1S	DLL	A1S	DIH	DLL	A1S	DIH	DLL	A1S	DIH	DLL	A1S	DIH	DLL	A1S
OF 1	S1O	A1S	DLL	A1S	DIH	DLL	A1S	DIH	DLL	A1S	DIH	DLL	A1S	DIH	DLL	A1S
LR 1-LR 2	DOL	DLL	DIH	A1D	DOL	DLL	DIH	A1D								
LL 1-LL 2	DOL	DLL	DIH	A1D	DOL	DLL	DIH	A1D								
FLX 2																
PF 2	DOL	A1D	DOH	A1DX	DLL	DIH	DOH	S1O	DIH	DOL	A1D	DOH	S1O	DIH	DOL	S1O#
PF 1	DOL	A1D	DOH	A1S#	DOH	DIH	DOL	DOL	DOH	DIH	DOH	A1D#	DIH#	DOH	DIL#	
LM 1	DOH	DIL#	DOH	A1S#	A0D	DOH	DOL	DOL	DOH	DIH	DOH	A1D#	DIH#	DOH	DIL#	
LA 1	DOH	DIL#	DOH	A1S#	A0D	DOH	DOL#	DOL#	DOH	DIH	DOH	A1D#	DIH#	DOH	DIL#	
LF 1	DOH	DIL#	DOH	A1S#	A0D	DOH	DOL	DOL	DOH	DIH	DOH	A1D#	DIH#	DOH	DIL#	
FA 1-FA 4	TAC	A0D	DOH	S1O*	DLL	DLL	A1S	A0D	DOH	S1O	A1D	DOH	DOL	A1D	DLL	DOH
FF 4	TAC	A1D	DOH	S1O	DIH	DLL	A1S	A0D	DOH	S1O	A1D	DOH	DOL	A1D	DLL	
FF 1-FF 3	TAC	A1D	DOH	S1O	DIH	DLL	A1S	A0D	DOH	S1O	A1D	DOH	DOL	A1D	DLL	

MDM/IOM CONFIGURATION

MDM	0	1	2	3	4	5	6	7	8	9	10	11	12	13	14	15
FF 1-FF 3	TAC	A1D	DOH	S1O	DIH	DLL	A1S	A0D	DOH	S1O	A1D	DOH	DOL	A1D	DLL	
FF 4	TAC*	A1D	DOH	S1O*	DIH	DLL	A1S	A0D	DOH	S1O	A1D	DOH	DOL*	A1D	DLL	
FA 1-FA 4	TAC	A1D	DOH	A1DX	DIH	DLL	A1S	A0D	DOH	A1D	DOH	DIH	DOL	A1D	DLL	DOH
PF 1	DOL	A1D	DOH	A1S#	DOH	DIH	DOL	DOL#	DOH	DIH	DOH	A1D#	DIL	A0D#	DLL	DOH
PF 2	DOL	A1D	DOH	A1DX	DLL	DIH	DOH	DOH	DOL	DIH	DOH	A1D	DOL	S1O	DIH	DOH
LM 1	DOH	DIL#	DOH	A1S#	A0D	DOH	DIH	DOL	DOH	DIH	DOH	A1D#	DIH#	DOH	DIL#	
LA 1	DOH	DIL#	DOH	A1S#	A0D	DOH	DOL	DOL	DOH	DIH	DOH	A1D#	DIH#	DOH	DIL#	
LF 1	DOH	DIL#	DOH	A1S#	A0D	DOH	DOL	DOL	DOH	DIH	DOH	A1D#	DIH#	DOH	DIL#	
FA 1-FA 4	TAC	A0D	DOH	S1O*	DLL	DLL	A1S	A0D	DOH	S1O	A1D	DOH	DOL	A1D	DLL	DOH
FF 4	TAC	A1D	DOH	S1O	DIH	DLL	A1S	A0D	DOH	S1O	A1D	DOH	DOL	A1D	DLL	
FF 1-FF 3	TAC	A1D	DOH	S1O	DIH	DLL	A1S	A0D	DOH	S1O	A1D	DOH	DOL	A1D	DLL	

OA 1-OA 3	A1S	DIH	DLL	A1S	DIH	DLL	A1S	DIH	DLL	A1S	DIH	DLL	A1S	DIH	DLL	A1S
OF 4	S1O#	A1S	DLL	A1S	DIH	DLL	A1S	DIH	DLL	A1S	DIH	DLL	A1S	DIH	DLL	A1S
OF 3	S1O#	A1S	DLL	A1S	DIH	DLL	A1S	DIH	DLL	A1S	DIH	DLL	A1S	DIH	DLL	A1S
OF 2	S1O	A1S	DLL	A1S	DIH	DLL	A1S	DIH	DLL	A1S	DIH	DLL	A1S	DIH	DLL	A1S
OF 1	S1O	A1S	DLL	A1S	DIH	DLL	A1S	DIH	DLL	A1S	DIH	DLL	A1S	DIH	DLL	A1S
LR 1-LR 2	DOL	DLL	DIH	A1D	DOL	DLL	DIH	A1D								
LL 1-LL 2	DOL	DLL	DIH	A1D	DOL	DLL	DIH	A1D								
FLX 2																
PF 2	DOL	A1D	DOH	A1DX	DLL	DIH	DOH	S1O	DIH	DOL	A1D	DOH	S1O	DIH	DOL	S1O#
PF 1	DOL	A1D	DOH	A1S#	DOH	DIH	DOL	DOL	DOH	DIH	DOH	A1D#	DIH#	DOH	DIL#	
LM 1	DOH	DIL#	DOH	A1S#	A0D	DOH	DOL	DOL	DOH	DIH	DOH	A1D#	DIH#	DOH	DIL#	
LA 1	DOH	DIL#	DOH	A1S#	A0D	DOH	DOL#	DOL#	DOH	DIH	DOH	A1D#	DIH#	DOH	DIL#	
LF 1	DOH	DIL#	DOH	A1S#	A0D	DOH	DOL	DOL	DOH	DIH	DOH	A1D#	DIH#	DOH	DIL#	
FA 1-FA 4	TAC	A0D	DOH	S1O*	DLL	DLL	A1S	A0D	DOH	S1O	A1D	DOH	DOL	A1D	DLL	DOH
FF 4	TAC	A1D	DOH	S1O	DIH	DLL	A1S	A0D	DOH	S1O	A1D	DOH	DOL	A1D	DLL	
FF 1-FF 3	TAC	A1D	DOH	S1O	DIH	DLL	A1S	A0D	DOH	S1O	A1D	DOH	DOL	A1D	DLL	

14-37	USED (37 MAY BE CALLED "NO OP")
35	RPB RESET P/S BITE
32	SPB SET P/S BITE
31	CPU COUNTER PARALLEL ENABLE-UPPER
30	CPL COUNTER PARALLEL ENABLE-LOWER
27	CLV CLEAR V-BIT RESET (I.E., SET V-BIT)
26	AAL A/D ADDRESS LOAD
25	ATL A/D TEST CODE LOAD
24	IRS IOM RESET
23	RLD REPLY LOAD (IOM REPLY REGISTER)
22	SIS SCU IN SELECT
21	SOS SCU OUT SELECT
20	BLR BUS REGISTER LOAD
17	NOT USED
16	SOP SEQUENCE PARITY CAPTURE
15	BSL BSR REGISTER LOAD
14	EOM END OF MESSAGE
13	ACS ADDRESS CHECK STROBE
12	TLD TIMER LOAD
11	SSL SERIAL SELECTED
10	LCN LAST COMMAND NOT COMPLETED
07	SBC SUCCESSFUL BITE COMPLETION
06	CAP TIME ERROR
05	IER INTERNAL ERROR
04	IMD ILLEGAL MODE
03	TMO TOO MANY WORDS
02	NBT NOT ABLE TO TRANSFER DATA CHECK ENABLE
01	NEC NONEXISTENT CHAN CHECK ENABLE
CND	INCH INCORRECT DATA ERROR

9-11	NAME
8	BIT 1 POWER INTERRUPT
7	INCOMING DATA ERROR
6	OPERATION REQUESTED ON A NONEXISTENT CHANNEL
5	NO INDICATED TRANSFER OF DATA TO/FROM IOM
4	LAST COMMAND NOT COMPLETED
3	SIMULTANEOUS EXECUTION ON PRI AND SEC DATA BUS
2	ILLEGAL MODE COMMAND
1	INTERNAL ERROR DETECTED
0	CAP TIME ERROR
11	SUCCESSFUL BITE COMPLETION
10	BITS 12-16 ARE LOCATED IN THE REGISTER FILE

7	NOT USED
6	REG FILE
5	UPPER CNTR
4	LOWER CNTR
3	WIRED ADRS
2	BSR STATUS
1	SEQ PROM
0	RCV DATA
BSR	NAME

7	ZEROS

7	SB	S-BIT
6	0	LOGIC 0
5	1	LOGIC 1
4	EB	S-BIT
3	V8	V-BIT
2	SD	SCU DATA
1	A/D	A/D DATA
0	18	IOM DATA
18	NAME	

7	NOT USED
6	LOGIC 0
5	B0	B11 0
4	B1	B11 1
3	B2	B11 2
2	B3	B11 3
1	B4	B11 4
0	1	LOGIC 1
08	NAME	

7	DTF	BITE TEST FIELD
6	SAL	SEQ ADRS LOWER
5	SAU	SEQ ADRS UPPER
4	INS	INSTRUCTIONS
3	UOS	UOP'S
2	IOM	I/O MODULE ADRS
1	CHL	CHANNEL ADRS
0	MOF	MODE FIELD
REGB	NAME	

REGB	NAME
	REG FILE SELECT DECODE

7	BIT 8	IFB	NAME
6	X	6	J	JUMP
5	X	5	C	CALL
4	X	4	CC	COND CALL
3	X	3	CJ	COND JUMP
2	X	2	CI	COND INCR
1	X	1	I	INCR
0	X	0	CI	COND INCR
REGB			HALF-WORD BITS	

3	SAUX BITS 13-16
2	SAUX BITS 9-12*
1	SALX BITS 4-8
0	SALX BITS 1-3*
REGB	HALF-WORD BITS

7	BIT 8	IFB	NAME
6	X	6	J	JUMP
5	X	5	C	CALL
4	X	4	CC	COND CALL
3	X	3	CJ	COND JUMP
2	X	2	CI	COND INCR
1	X	1	I	INCR
0	X	0	CI	COND INCR
REGB			HALF-WORD BITS	

3	SAUX BITS 13-16
2	SAUX BITS 9-12*
1	SALX BITS 4-8
0	SALX BITS 1-3*
REGB	HALF-WORD BITS

3	BITE RTN VO3
2	BITE RTN VO2
1	BITE RTN VO1
0	BITE RTN VO0
TSB	FUNCTION
0,4,7	NOT SELECT

3	BITE RTN VO3 (+25)
2	BITE RTN VO2 (+15)
1	BITE RTN VO1 (NULL)
0	BITE RTN VO0 (+8EP)
5	BITE REF VOL
6	BITE FS VOL
TSB	FUNCTION
0,4,7	NOT SELECT

3	BITE RTN +25
2	BITE RTN +15
1	BITE RTN +8EP
0	BITE RTN NULL
5	BITE REF VOL
6	BITE FS VOL
TSB	FUNCTION
0,4,7	NOT SELECT

7	BIT 8	IFB	NAME
6	X	6	J	JUMP
5	X	5	C	CALL
4	X	4	CC	COND CALL
3	X	3	CJ	COND JUMP
2	X	2	CI	COND INCR
1	X	1	I	INCR
0	X	0	CI	COND INCR
REGB			HALF-WORD BITS	

3	SAUX BITS 13-16
2	SAUX BITS 9-12*
1	SALX BITS 4-8
0	SALX BITS 1-3*
REGB	HALF-WORD BITS

CORE POWER SUPPLY 2

CORE POWER SUPPLY 1

SECOND-STAGE REG (PS MOD 1)

PWR BUS 2 REG

PWR BUS 1 REG

FIRST-STAGE REGULATION

BACKUP REG

PULSE-WIDTH MODULATED REG

+10V REG (PS MASTER)

CHOPPER INPUT (50KHZ)

MIA PORT 2 (SECONDARY)

MIA PORT 1 (PRIMARY)

MANCHESTER ENCODER

MANCHESTER DECODER

MIA ERROR DETECT

RCVR SHIFT REG

XMIT SHIFT REG

RCVR SYNC LOGIC

XMIT SYNC LOGIC

RESPONSE SYNC LOGIC

PROGRAM-CONTROLLED TIMER LOGIC

CONDITION SENSE MULTIPLEXER

REGISTER FILE

SEQUENCE PROM FORMAT

SEQUENCE PARITY CHECK LOGIC

SEQUENCE PROM ADRS BUFFER

CONTROL STORE ADDRESSING LOGIC

INSTRUCTION CONTROL DECODE

MDM ADDRESS CHECK

CYCLIC COMPARE LOGIC

CYCLIC TEST SELECT

REAL-TIME SCU SYNC

POWER INTERRUPT MONITOR LOGIC

PS BITE CNTL

SCU RESET

PROM PWR RESET

PS BITE VALID

PS BITE CMD

SCU BUSY

PWR LOSS

SCU LOGIC VOLTAGE LOW LEVEL DETECTOR

SCU BUS

SCU BUS ACTIVE

SCU BUS ENABLE

SCU BUS CONTROL SIGNALS

SCU TO MIA RCVR ENABLE

SCU TO MIA RCVR CONTROL SIGNALS

SCU TO MIA XMIT CONTROL SIGNALS

SCU TO MIA XMIT CLOCK SIGNALS

MIA TO SCU DATA

MIA TO SCU RCVR CONTROL SIGNALS

MIA TO SCU RCVR ENABLE SIGNAL

MIA TO SCU XMIT DATA SYNC

MIA TO SCU XMIT DATA

SCU TO MIA DATA

SCU TO MIA RCVR

SCU TO MIA XMIT

SCU 1

SCU 2

CONV 1

CONV 2

MIA 1

MIA 2

TO A/D CONV 1

TO A/D CONV 2

TO A/D MIA 1

TO A/D MIA 2

TO A/D SCU 1

TO A/D SCU 2

CONDITION FIELD (SENSE)

INSTRUCTION FIELD

8-BIT LITERAL FIELD (LF0-LF7)

DELAYED LITERAL FIELD (8 BITS)

LITERAL FIELD (BITS 0-7)

LITERAL FIELD (BITS 5-8)

LITERAL BUS SELECT (TRIPLED)

CHECK PATTERN (CP)

ADRS SYNCHRONIZED (AD SYNC)

ADRS/DATA

ADRS CHK ENA

ADRS CHECK (ACH)

SELF-TEST (10-SERIAL)

SERIAL DATA

SERIAL DATA MBZ

RCVR DATA

RCVR ENABLE

RCVR SHIFT CLK

RCVR READY

RCVR BUSY

RCVR DATA BUS ACTIVE

RCVR DATA (DATA DECODE)

RCVR W0 SYNC

RCVR CMD SYNC

RCVR DATA SYNC

RCVR NOT BUSY

RCVR BUSY (DBA)

XMIT DATA MBZ

XMIT ENABLE

XMIT SHIFT CLOCK

XMIT DATA AVAILABLE

XMIT EMA

XMIT SHIFT CLK (2MHZ)

TRANSMIT ENABLE

2 MHZ CLOCK (SYNC)

SYNC COMPLETE

SYNC TYPE (0=CMD/ 1=DATA)

CMD SYNC

WORD SYNC

DEAD STOP CLEAR (DSC)

RESET

SCU CLK

SCU BUSY

SCU BUS ACTIVE

PWR BUS ACTIVE

PWR INTERRUPTED

PWR INT

PS BITE

PS BITE CMD

PS BITE VALID

P VALID 1

P VALID 2

REG 1 INHIBIT

REG 2 INHIBIT

CMD BITE 1 (PS1,PS2)

BITE 1 (PS2)

BITE 1 (PS1)

BITE 2 (PS1)

P BITE B1

P BITE B1,B2

D BITE B1,B2

PS BITE SENSOR

PS BITE SENSOR TRIP SENSOR (+1.37 AMPS)

+18.6V PWR BUS

+18.6VDC PWR BUS 1

+18.6VDC PWR BUS 2

+28 VDC BUS (OOH 10V'S)

+10V REF

+10 VDC (P-GND)

+12 VDC (P-GND)

+20 VDC (P-GND)

+5 VDC (P-GND)

+10 VDC (P-GND)

+12VDC

+2VDC

+5VDC

+15.2VDC (P-GND)

+10V REG (PS MASTER)

+10.8VDC (P-GND)

+10.8V PWR BUS

+10.8V ANALOG REG

+10.8V OVERVOLTAGE DETECT (+20.5V)

+10.8V ANALOG REG DETECT (+14.9V)

+10.8V UNDERVOLTAGE DETECT

ENERGY STORAGE VALID LEVEL MONITOR (+20.5VDC)

ENERGY STORAGE INPUT (+20.5VDC)

+20.5V ANALOG REG

+20.5V OVERVOLTAGE DETECT (+20.5)

+20.5V PWR BUS

PRE REG

PRE REG FILTER

GATE LIMITER (+5.5 TO 5.5V/8 SEC) (POWER UP RAMP)

PULSE-WIDTH MODULATED REG

+18.6V PWR BUS

+18.6VDC PWR BUS

SQUARE WAVE OSC

SAWTOOTH GEN

SYNC OSC

SYNC OSC OUT

SYNC OSC DRIVER

SYNC OSC INPUT

SYNC OSC SELECT

SYNC OSC CONVERTER

SYNC OSC DIV

SYNC OSC DRIVER

SYNC OSC MASTER/ SLAVE DRIVER LOGIC

SYNC OSC CHECK/CLOCK SELECT (+21.1V)

SYNC OSC STAT

SYNC OSC (+18.6V)

100KHZ OSC

100KHZ

100KHZ (PS1)

100KHZ (PS2)

BITE 1 (PS2)

BITE 1 (PS1)

BITE 2 (PS1)

BITE 1 (PS2)

BITE 2 (PS2)

INHIBIT

P BITE B1

P BITE B1,B2

D BITE B1,B2

PS BITE SENSOR

PS BITE SENSOR TRIP SENSOR (+1.37 AMPS)

+18.6V PWR BUS

+18.6VDC PWR BUS 1

+18.6VDC PWR BUS 2

+28 VDC BUS (OOH 10V'S)

+10V REF

+10 VDC (P-GND)

+12 VDC (P-GND)

+20 VDC (P-GND)

+5 VDC (P-GND)

+10 VDC (P-GND)

+12VDC

+2VDC

+5VDC

+15.2VDC (P-GND)

+10V REG (PS MASTER)

+10.8VDC (P-GND)

+10.8V PWR BUS

+10.8V ANALOG REG

+10.8V OVERVOLTAGE DETECT (+20.5V)

+10.8V PWR BUS

DATE: 07/13/95	NAME: BJB	VERSION: BPT,6
DATE: 07/26/95	NAME: LAM	VERSION: BPT,7
DATE: 05/10/96	NAME: CAR	VERSION: INK,7

19 SRB MDM'S NO LONGER CROSS-STRAP REDUNDANT +18.6VDC POWER BUSES INFLIGHT. ISOLATION IS MAINTAINED VIA ELECTRONIC SWITCHES (REFER TO DWG 8.8 SHEET 3, ZONE V-5 FOR DETAILS). SRB MDM'S DO NOT UTILIZE CORE PWR SUPPLY +10VDC REGULATOR LOGIC (PS MASTER HYBRID)

18 THE FOLLOWING LOGIC REPRESENTATION SUMMARIZES THE HARDWARE AND SOFTWARE LOGIC BEHIND THE BITS IN THE BITE STATUS REGISTER, AND THE ACTION TAKEN

BITE STATUS REGISTER (BSR) HARDWARE/SOFTWARE LOGIC SUMMARY

BIT 1 POWER INTERRUPT (PWR INT) — ACTION: ALL ANALOG AND DISCRETE OUTPUT CHANNELS ARE ABOUT TO BE RESET TO ZERO VDC

BIT SET DURING PWR-UP OR PWR-DOWN (REFER TO ZONE M,N-3 FOR DETAILED LOGIC) EACH SCU WILL SIMULTANEOUSLY DETECT PWR INT AND SET ITS OWN BSR

BIT 2 INCOMING DATA ERROR (IDE) — ACTION: CMD WD/CMD DATA WD PROCESSING IS TERMINATED (SUBSEQUENT INCOMING DATA WORDS OF SAME MESSAGE ARE DISCARDED)

HARDWARE | SOFTWARE

INVALID MANCHESTER, BIT COUNT ERROR, PARITY ERROR, MIA END-OF-WORD → MIA DETECTED ERROR (0=ERR); MDM ADRS OK, CMD DATA WD '101' PATTERN CHECK OK → (0=ERR); (ADE), CMD WD; (SGC), CMD DATA WD → IDE → SET BSR BIT 2; EOM (TERMINATE MICRO PROG)

BIT 3 NON-EXISTANT IOM CHANNEL ADRS (NEC) — ACTION: SUBSEQUENT CMD DATA WORDS ARE ACCEPTED IF CORRECT. ANY INCORRECT RESPONSE DATA WORD IS FLAGGED TO THE GPC VIA CLEARED V-BIT

BIT SET WHEN IOM CHANNEL ADRS NOT VALID FOR SELECTED IOM ADRS (THAT IS, NO IOM REPLY AT "NEC" CHECK TIME) (REFER TO ZONE F-1 FOR DETAILS)

BIT 4 UNABLE TO TRANSFER DATA TO/FROM IOM, OR DATA TRANSFER INCOMPLETE (NTI) — ACTION: PROCESSING CONTINUES (V-BIT IS CLEARED FOR RESPONSE DATA WD THAT ENCOUNTED THE PROBLEM, SUBSEQUENT DATA WDS NOT AFFECTED)

BIT SET WHEN IOM REPLY (IRP) OR A/D REPLY (ADR) INDICATES FAILURE TO COMPLETE DATA TRANSFER (REFER TO ZONE F-1 FOR DETAILS)

BIT 5 TOO MANY WORDS IN LAST MESSAGE (THW) — ACTION: CMD DATA WD PROCESSING IS TERMINATED (THAT IS, CMD DATA WD IS IGNORED)

DATA SYNC DETECTED; CTR UNDERFLOW CMD• (0=NOT SET) (CUF); GAP-TIME ERROR CMD (0=NO GTE) (GTE); UNEXPECTED CMD DATA WD → THW → SET BSR BIT 5; THW•• → EOM (TERMINATE MICRO PROG)

•IF CMD WD MESSAGE TERMINATED PREMATURELY DUE TO DETECTED ERROR, CTR UNDERFLOW SET TO BYPASS THIS CHECK
••BIT 5 SET DURING INITIAL PWR-UP SEQUENCE AND DURING SCU BITE TEST SEQUENCING

BIT 6 LAST CMD NOT COMPLETED (LCN) — ACTION: NEW CMD WORD IS ACCEPTED

NEW CMD WD; SCU BUSY NOW → SET BSR BIT 6; LCN•

•BIT 6 SET DURING INITIAL PWR-UP SEQUENCE AND DURING SCU BITE TEST SEQUENCING

BIT 7 SIMULTANEOUS OPERATION OF BOTH SCU'S (SIMOP) — ACTION: CAUSES IMMEDIATE HALT OF PROCESSING FOR BOTH PRI AND SEC SCU'S, EITHER SCU WILL CONTINUE UPON RECEIPT OF A NEW CMD WORD

OTHER SCU ALREADY BUSY; NEW CMD WORD RECEIVED → SIMOP → SET BSR BIT 7 (VIA HDWRE); 'EOM' (VIA HDRWE)

BIT 8 ILLEGAL MODE BRANCH COMMANDED (IMD) — ACTION: CMD WD/CMD DATA WD PROCESSING IS TERMINATED

INVALID MODE CNTL FIELD BRANCH (ZONE M-3); INVALID IOM CLASS MODE BRANCH (ZONE J-1); INCOMPATIBLE PROG SEQ/IOM CLASS MODE BRANCH; INCOMPATIBLE PROG SEQ/MODE CNTL FIELD BRANCH → IMD•, ILLEGAL BRANCH; UNEXPECTED CMD DATA WD (REFER TO BIT 5 LOGIC) (1=GTE); GAP TIME ERROR (GTE) → ILLEGAL CMD, CMD WD → IMD → SET BSR BIT 8; EOM (TERMINATE MICRO PROG)

•BIT 8 MAY BE SET DURING SCU BITE TEST TO INDICATE UNSUCCESSFUL BITE TEST

BIT 9 INTERNAL ERROR DETECTED (IER) — ACTION: PROCESSING IS TERMINATED (IF TRANSMITTING A RSP DATA WD, TRANSMISSION IS COMPLETED WITH THE SEV V-BIT CLEARED, THEN THE PROCESSING IS TERMINATED)

SEQUENCE PROM PARITY CHECK FAIL (0=ERR) (SPE); UNEXPECTED IOM REPLY (1=ERR) (IRP); UNEXPECTED A/D REPLY (1=ERR) (ADR); UNEXPECTED PS BITE VALID (PBV) → REPLY BUS CHECK FAIL → EOM (TERMINATE MICRO PROG); RSP DATA CHECK-BIT PATTERN INVALID (REFER TO ZONE D-7 FOR DETAILS) → INTERNAL ERR → INT ERR → SET BSR BIT 9; CLEAR V-BIT; PS BITE TEST; IER

BIT 10 INCOMING (MIA) WORD GAP INTERNAL ERROR (GTE) — ACTION: PROCESSING IS TERMINATED (REMAINING INCOMING CMD DATA WDS ARE IGNORED) NEW CMD WORDS ARE ACCEPTED

GAP TIME ERROR (1=ERR) (GTE); DBA; EXPECTED CMD DATA WORD• → GTE → SET BSR BIT 10; EOM (TERMINATE MICRO PROG)

•PROGRAM WAITS UNTIL DBA CONDITION IS MET PRIOR TO EACH EXPECTED CMD DATA WORD (DBA = DATA BUS ACTIVE OR GTE)

BIT 11 SUCCESSFUL BITE TEST COMPLETION (SBC) — ACTION: NO ACTION REQUIRED

BIT SET WHEN SCU BITE TEST, A/D BITE TEST, OR CORE POWER SUPPLY BITE TEST SUCCESSFULLY COMPLETED

MDM COMMAND WORD AND RESPONSE DATA WORD FORMATS

TO IOP, PCMMU, OR GSE:

RSP DATA WORD: DATA SYNC (1–3) | MDM ADDRESS 14 (4–8) | DATA 13 (9–24) | SEV (25–27) | PARITY (28)

TO MDM:

CMD WORD: DIRECT MODE (IOP, PCMMU, GSE): CMD SYNC (1–3) | MDM ADDRESS 14 (4–8) | SPARE (9) | MODE CONTROL FIELD (10–13) | IOM ADDRESS (14–17) | INITIAL CHANNEL ADDRESS (18–22) | NUMBER OF ADDITIONAL WORDS/CHANNELS (23–27) | PARITY (28)

CMD WORD: INDIRECT MODE (IOM, PCMMU, GSE): CMD SYNC (1–3) | MDM ADDRESS 14 (4–8) | SPARE (9) | MODE CONTROL FIELD (10–13) | PROM SEQ STARTING ADDRESS (14–22) | NUMBER OF ADDITIONAL PROM INSTR (23–27) | PARITY (28)

CMD DATA WORD: (IOP, PCMMU, GSE): DATA SYNC (1–3) | MDM ADDRESS 14 (4–8) | DATA 13 (9–24) | CHECK PATTERN 1 0 1 (25–27) | PARITY (28)

MDM RTN WORD CMD: CMD SYNC (1–3) | MDM ADDRESS 14 (4–8) | SPARE (9) | MODE CONTROL FIELD (10–13) | WORD WRAP PATTERN (14–27) | PARITY (28)

TO/FROM IOP, PCMMU, OR GSE — SEC PORT DBC; PRI PORT DBC

MDM OPERATION OVERVIEW

MIA RECEIVES CMD WD VIA DATA BUS, CONVERTS WORD FROM SERIAL MANCHESTER TO NRZ AND SENDS WORD SERIALLY TO THE SCU. SCU CONVERTS SERIAL NRZ TO PARALLEL DATA, 4 OR 5 BITS AT A TIME. THESE 4-BIT OR 5-BIT GROUPS ARE PROCESSED EVEN AS THE MIA RECEIVES THE REMAINDER OF THE WORD. THE FIRST 5 BITS (MDM ADDRESS) ARE COMPARED WITH MDM'S OWN WIRED ADRS. IF ADRS OK (AD SYNC=1), PWR IS APPLIED TO THE CONTROL STORE MEMORY (MDM MICRO-PROCESSOR). THE SUBSEQUENT INCOMING DATA (4 OR 5 BITS AT A TIME) IS ROUTED THRU THE MDM UNDER PROGRAM CONTROL. THE INCOMING MODE CONTROL FIELD DIRECTS THE MICRO-PROCESSOR TO A SPECIFIC PROGRAM BRANCH. REFER TO THE 'MDM PROGRAM INTERPRETATION HANDBOOK' (JSC-10579) FOR DETAILED PROGRAM LOGIC

13 DATA FIELD DEFINES THE DATA TO BE SENT TO OR RECEIVED FROM AN IOM

12 SIGNALS SCU THAT THE IOM HAS BEEN SELECTED, THAT THE SCU CONTROL WORD HAS VALID CHANNEL ADDRESS, VALID TASK AND PROPER CHECK BITS, AND THAT THE REQUESTED OPERATION HAS BEEN PERFORMED

11 SEQ PROM IS USED IN INDIRECT MODE FOR CMD DATA OR RESPONSE DATA XFERS, AND IS PROGRAMMED UNIQUELY FOR EACH MDM TYPE. EACH PROM CMD WORD CAN INITIATE XFER OF 1 TO 16 MDM RESPONSE WORDS. MAX PROM PROGRAM LENGTH IS 32 CMD WORDS. IOM CLASS FIELD IS DETERMINED FROM IOM ADDRESS FOR BOTH DIRECT AND INDIRECT MODE. THE IOM CLASS FIELD THEN OVERLAYS THE IOM ADDRESS IN THE REGISTER FILE

10 DURING INITIAL PWR-UP SEQUENCE (AFTER DSC), DELAYED DEAD STOP CLEAR HOLDS ADRS BIT REGISTER RESET UNTIL CONTROL STORE PROM IS ENABLED. THIS FORCES PROGRAM TO OCTAL ADRS 000 (INITIAL PWR UP). UNLESS PWR LOSS (DSC) OCCURS, SUBSEQUENT PROGRAM BRANCHES ARE CONTROLLED BY CONTENTS OF THE 'SPECIAL' REG (PWR INT BIT, CMD SYNC BIT). FIRST INSTRUCTION WILL BE EXECUTED 5µ SEC AFTER MDM ADRS COMPARISON (ZONE N-5)

9 5-BIT UPPER AND 4-BIT LOWER UP/DOWN COUNTERS ARE CONTROLLABLE VIA SCU MICRO INSTRUCTION. COUNTERS FUNCTION AS:

1. COUNT DOWN NUMBER OF WORDS TO BE TRANSFERRED
2. INCREMENT CHANNEL ADDRESS
3. HOLD AND INCREMENT 9 BIT ADDRESS FOR PROM EXECUTION
4. CONDITIONAL BRANCH REGISTER (COUNTER UNDER FLOW)

8 IOM REPLY (IRP) AND A/D REPLY (ADR) ARE NORMALLY LOGIC ZERO WITH SIGNALS SET ONLY AT SPECIFIED TIMES. MICRO PROGRAMS PERFORM A REPLY BUS CHECK PRIOR TO RECEIPT OF DATA TO VERIFY REPLY LINES NOT FAILED ON

7 SELECTS A/D MODE OF OPERATION: IOM DATA OR ONE OF FIVE BITE TEST MODES. A/D CONV BITE TEST RETURNS FIVE RSP DATA WORDS: -FS, -REF, NULL, +REF, +FS

6 MIA AND SCU ARE HELD IN RESET CONDITION UNTIL 90 PERCENT POWER LEVEL IS REACHED. AFTER RESET PERIOD, THE SCU CONDUCTS SCU POWER-UP BITE TESTS AND AFTER SUCCESSFUL COMPLETION ENABLES THE MIA

5 FORTY-SIX INPUTS EXCLUSIVE OR'ED TO PRODUCE AN 8-BIT TEST FIELD:
1. ALL CONDITION SET DISCRETES EXCEPT 'EOM'
2. CONTROL STORE PROM BITS 17 THRU 37 EXCEPT BIT 35 (CYCLIC LOAD)
3. RSP WD CHECK-BIT VERIFICATION DETECTED INTERNAL ERROR (ZONE D-7)

4 NONCOMPARISON RESULTS IN IMMEDIATE RESET OF BOTH MIA AND SCU. RESET CONDITION CAN ONLY BE REMOVED BY CYCLING POWER TO THE MDM. PORT MODING WILL ALSO RECOVER MDM

3 BOTH POWER SUPPLIES ARE CONTINOUSLY IN OPERATION. POWER SUPPLY DESIGN DOES NOT ATTEMPT TO BALANCE THE POWER PROVIDED BY EACH BUS.

DURING PS BITE TESTS, REGULATORS ARE 'INHIBITED' (BY REDUCING REGULATION VALUE ABOUT 2-3%) IN ORDER TO FORCE OTHER CHANNEL TO CARRY FULL LOAD. IF OTHER PWR SUPPLY HAS FAILED, OUTPUT WILL DECREASE TO REGULATION LEVEL OF PWR SUPPLY BEING TESTED

2 CAPABLE OF MAINTAINING POWER FOR 2 MILLISECONDS IN EVENT OF LOSS OF PRIME POWER

1 DESCRIBES DPS MDM SWITCH, POWER SOURCE, AND TM POINT CORRELATION. PWR AND CNTLS FOR 01 MDM'S SHOWN ON DWG 17.1. FLEX MDM PWR AND CNTLS ARE MISSION DEPENDENT.

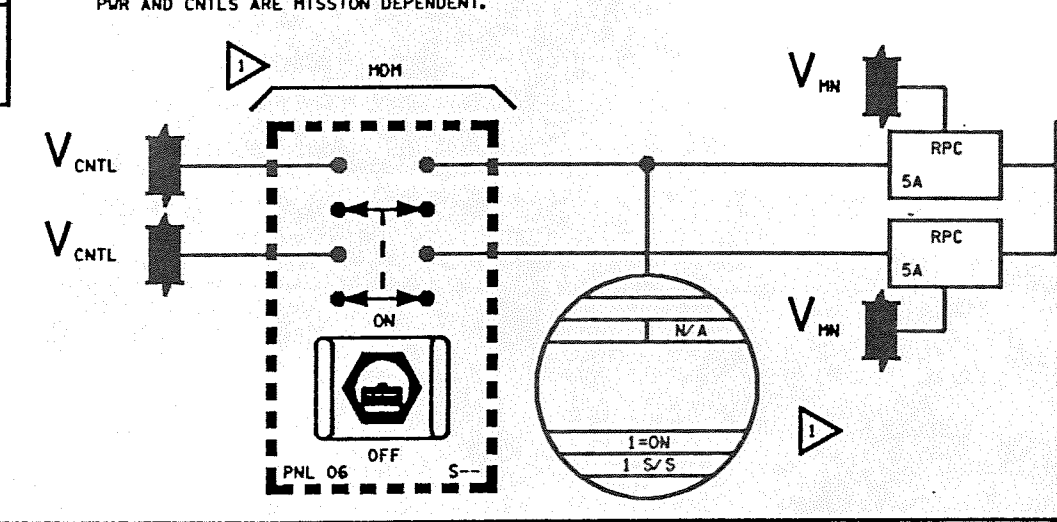

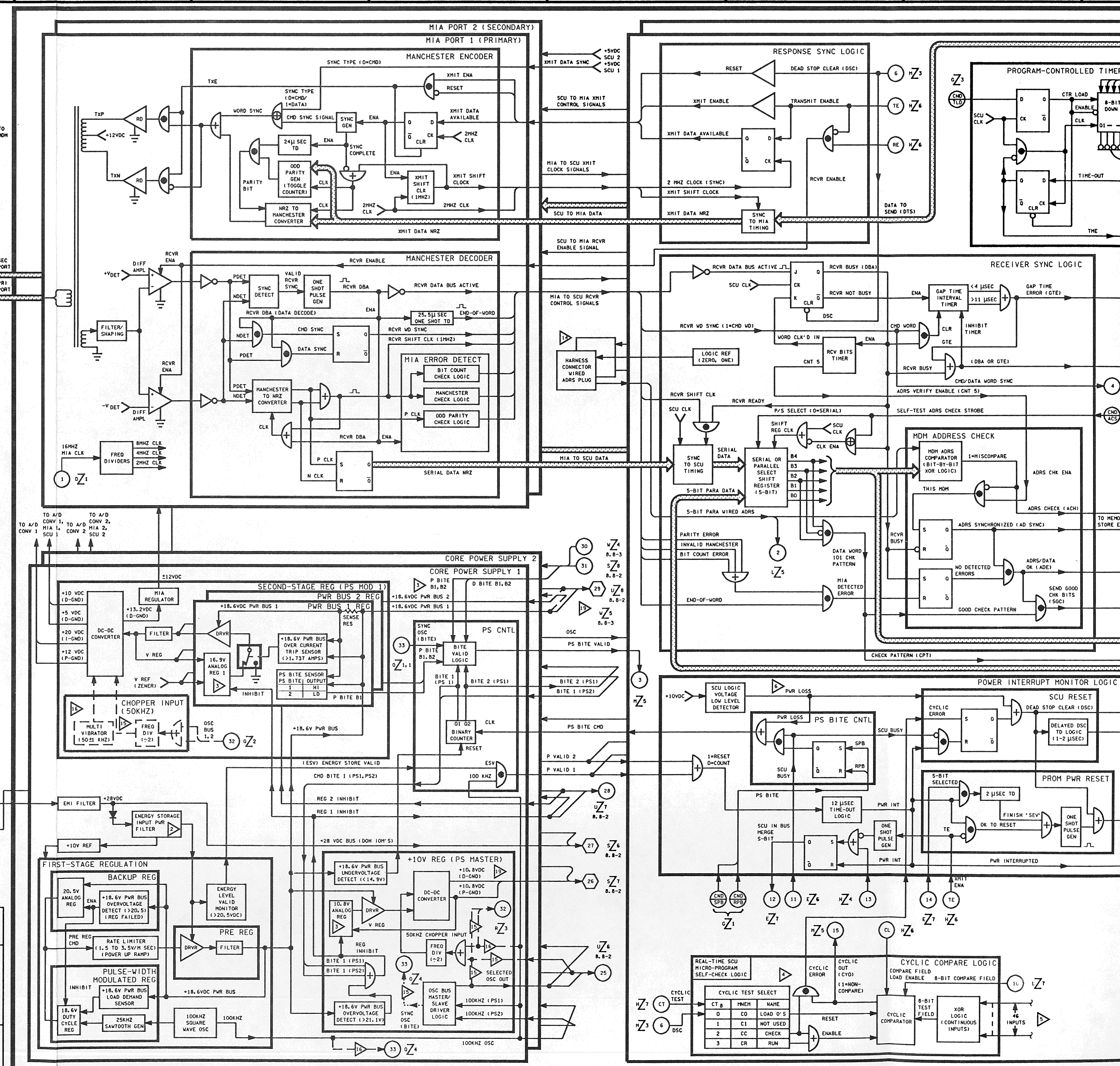

17 THE FLEX MDM CARD CONFIGURATION IS MISSION DEPENDENT. A FLEX MDM HAS 1 CORE POWER SUPPLY, 1 MIA, 1 SCU, 1 A/D CONVERTER, AND 8 I/O MODULES.

16 CIRCUIT IS UNIQUE TO '6XXX' SERIES MDM'S (POST OV-102 'INCREMENT III' DESIGN DOES NOT UTILIZE MASTER/SLAVE OSCILLATOR BUS SELECT LOGIC TO DRIVE DC-DC CONVERTERS). DUE TO LIMITED SPARES, THESE MDM'S MAY BE FLOWN ON ANY ORBITER.

15 CIRCUIT IS UNIQUE TO '5XXX' SERIES MDM'S (OV-102 DESIGN, DEVELOPMENT, TEST, AND EVALUATION UNITS). DUE TO LIMITED SPARES, THESE MDM'S MAY BE FLOWN ON ANY ORBITER.

14 MDM WIRED ADDRESS (DECIMAL):

FF 1 - FF 4, PF 1, LF 1 = 10
FA 1 - FA 4, PF 2, LA 1 = 12
FLX 1 •, FLX 2 •, + LM 1 24
LL 1 9, LL 2 6, LR 1 15, LR 2 18
OF 1 12, OF 2 15, OF 3 17, OF 4 18
OA 1 10, OA 2 6, OA 3 9

• MISSION DEPENDENT ADRS = 6, 9, 15, 29, OR 30
+ LM 1 IS USED FOR EDO MISSIONS

1 MDM	PNL 06 SWITCH NAME	PNL 06 SWITCH SW NO	PNL NO	MDM POWER SUPPLY 1 POWER SOURCE V_{CNTL}	MDM POWER SUPPLY 1 POWER SOURCE V_{MN}: PCA	MDM POWER SUPPLY 2 POWER SOURCE V_{CNTL}	MDM POWER SUPPLY 2 POWER SOURCE V_{MN}: PCA	MML NO	TLM SOURCE	MML NAME
FF 1	FF 1	S26	06	AB2	MNA FPC1	AB3	MNB FPC2	V72S7981E	OF 1	MDM FF 1 PWR SUPPLY NO 1-RPC
FF 2	FF 2	S27	06	BC2	MNB FPC2	BC3	MNC FPC3	V72S7983E	OF 2	MDM FF 2 PWR SUPPLY NO 1-RPC
FF 3	FF 3	S28	06	CA3	MNC FPC3	CA2	MNA FPC1	V72S7985E	OF 3	MDM FF 3 PWR SUPPLY NO 1-RPC
FF 4	FF 4	S29	06	BC1	MNB FPC2	BC3	MNC FPC3	V72S7987E	OF 2	MDM FF 4 PWR SUPPLY NO 1-RPC
FA 1	FA 1	S21	06	AB1	MNA APC4	AB2	MNB APC5	V72S7991E	OA 1	MDM FA 1 PWR SUPPLY NO 1 RPC
FA 2	FA 2	S22	06	BC1	MNB APC5	BC2	MNC APC6	V72S7993E	OA 2	MDM FA 2 PWR SUPPLY NO 1-RPC
FA 3	FA 3	S23	06	CA2	MNC APC6	CA1	MNA APC4	V72S7995E	OA 3	MDM FA 3 PWR SUPPLY NO 1-RPC
FA 4	FA 4	S24	06	CA3	MNC APC6	CA1	MNA APC4	V72S7997E	OA 3	MDM FA 4 PWR SUPPLY NO 1-RPC
PF 1	PL 1	S52	06	AB1	MNA FPC1	AB3	MNB FPC2	V72S7972E	OF 2	PL MDM PF 1 PWR SUPPLY NO 2-RPC
PF 2	PL 2	S20	06	BC1	MNB FPC2	BC3	MNC FPC3	V72S7973E	OF 2	PL MDM PF 2 PWR SUPPLY NO 1-RPC
LF 1				GSE	PREFLT 1	GSE	PREFLT 2			
LA 1				GSE	PREFLT 1	GSE	PREFLT 2			
LL 1				MEC 1	MNA APC1	MEC 2	MNB APC2			
LL 2				MEC 1	MNA APC1	MEC 2	MNB APC2			
LR 1				MEC 1	MNA APC1	MEC 2	MNB APC2			
LR 2				MEC 1	MNA APC1	MEC 2	MNB APC2			

POWER AND CONTROLS FOR 01 MDM'S ARE SHOWN ON DWG 17.1-1

8 MDM 1

NATIONAL AERONAUTICS AND SPACE ADMINISTRATION LYNDON B. JOHNSON SPACE CENTER HOUSTON, TEXAS	SIGNATURE	DATE
	DSGN L. BUCHANAN	11-7-78
	DR L. BUCHANAN	11-7-78
MULTIPLEXER/ DEMULTIPLEXER	ENGR K. AKAGI	
	ENGR Kathy Akagi	5/15/96
	APP [signature]	5-15-96
DWG NO 8.8 / SPACE SHUTTLE / ALL	APP H. J. Clancy	5-15-96
	CADS S. K. Kimbrough	6-17-96
SHEET 1 OF 3 / PAGE 8.8-1 / 126.5 X 34	LTR E	PCN 6

BASIC REV E-6

DATE: 10/7/87	NAME: MAG	VERSION: NO. 5
DATE: 08/24/90	NAME: MFB	VERSION: NO. 6
DATE: 09/07/90	NAME: SEW	VERSION: NO. 7

ANALOG INPUT SINGLE-ENDED (AIS) IOM

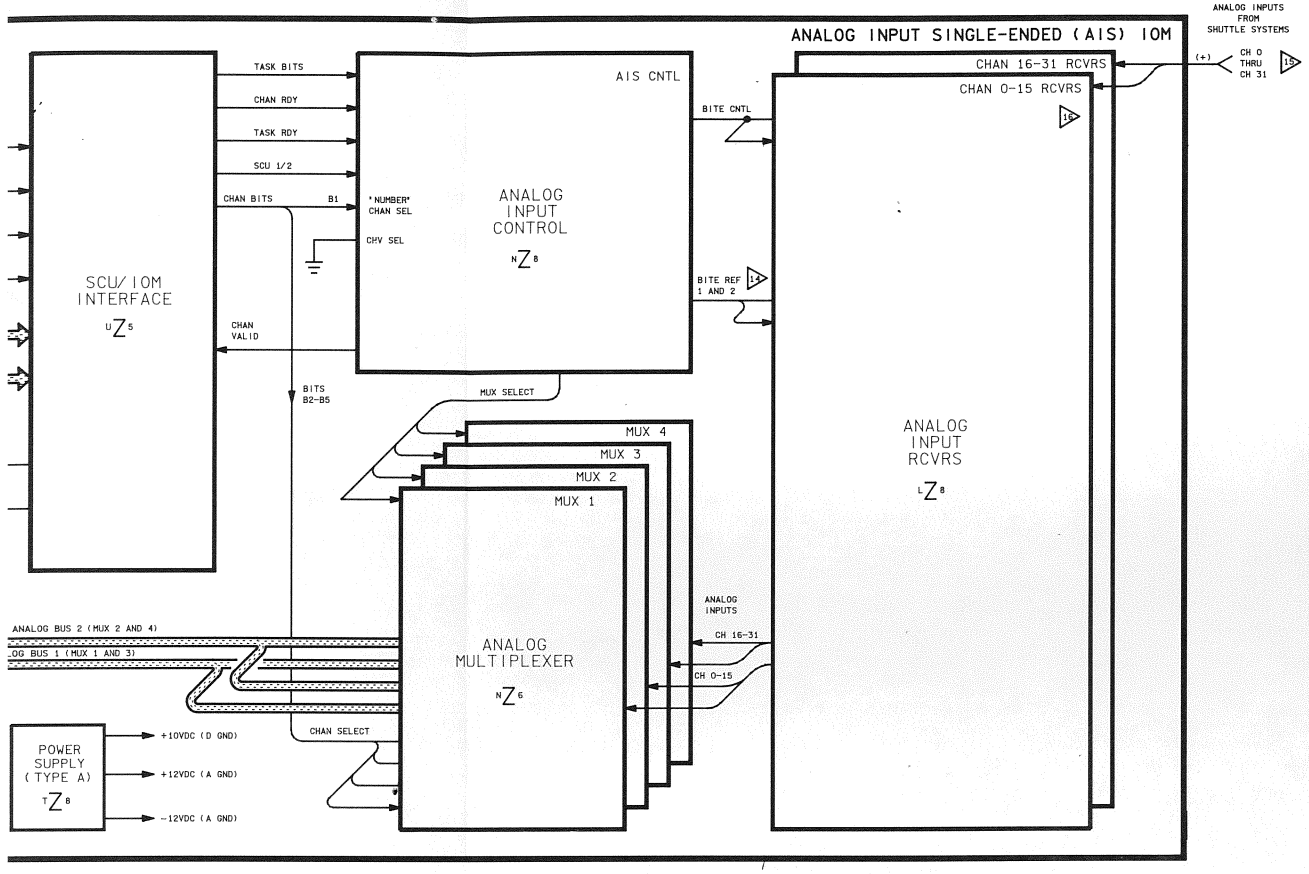

ANALOG OUTPUT DIFFERENTIAL (AOD) IOM

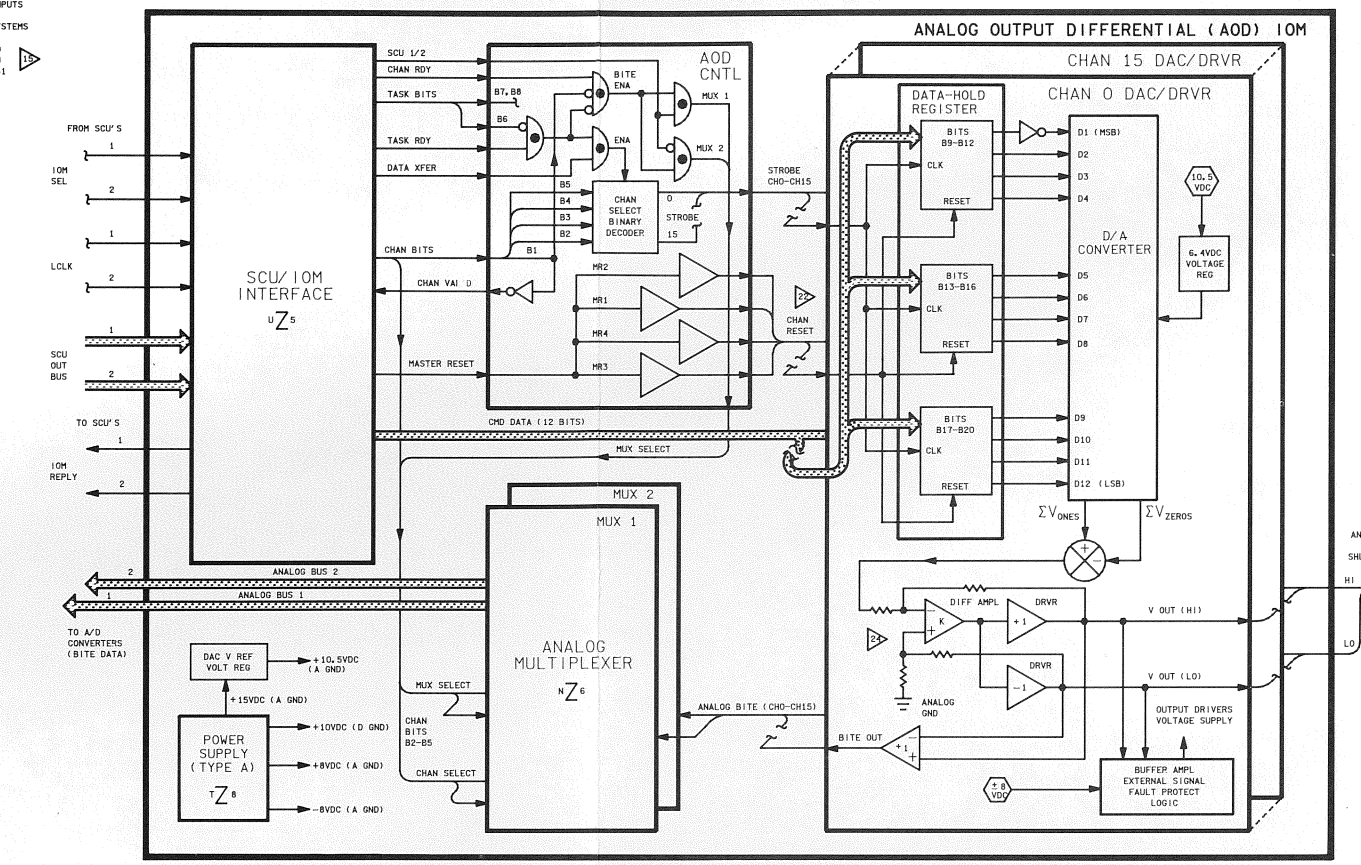

DISCRETE OUTPUT LOW (DOL) IOM (5VDC)

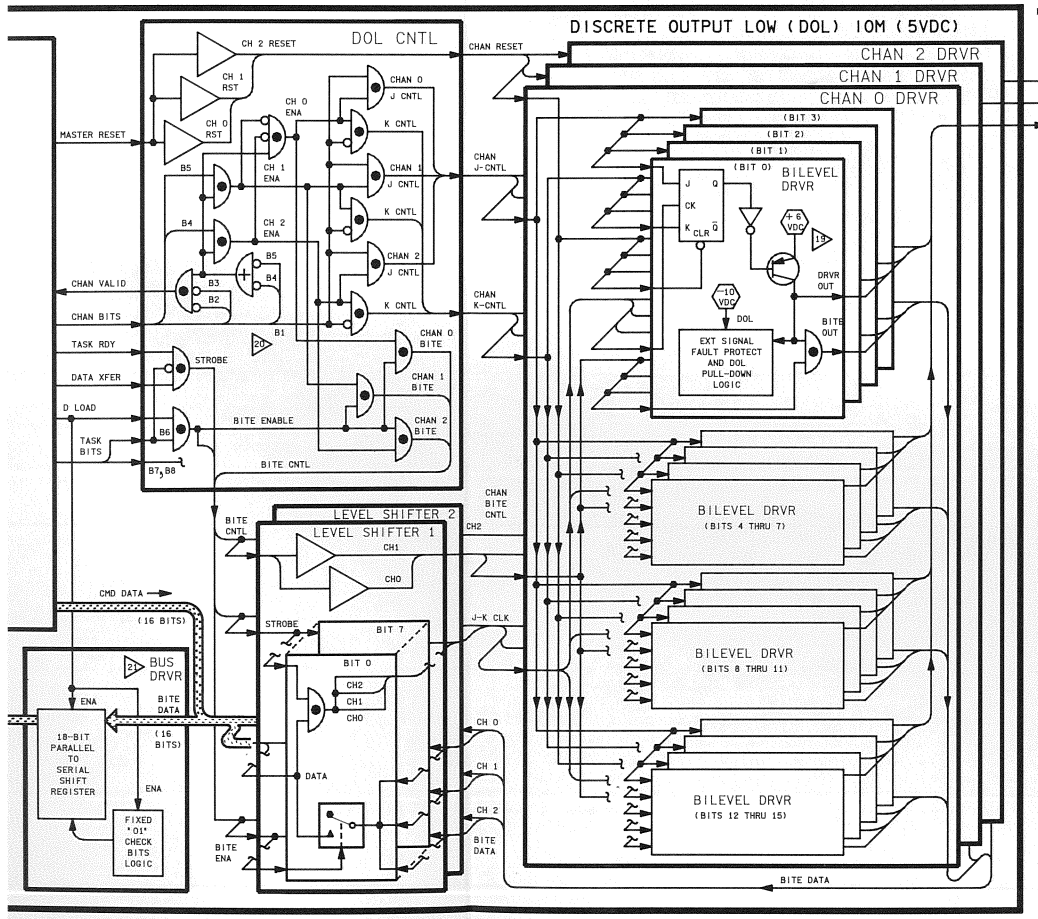

DISCRETE OUTPUT HIGH (DOH) IOM (28VDC)

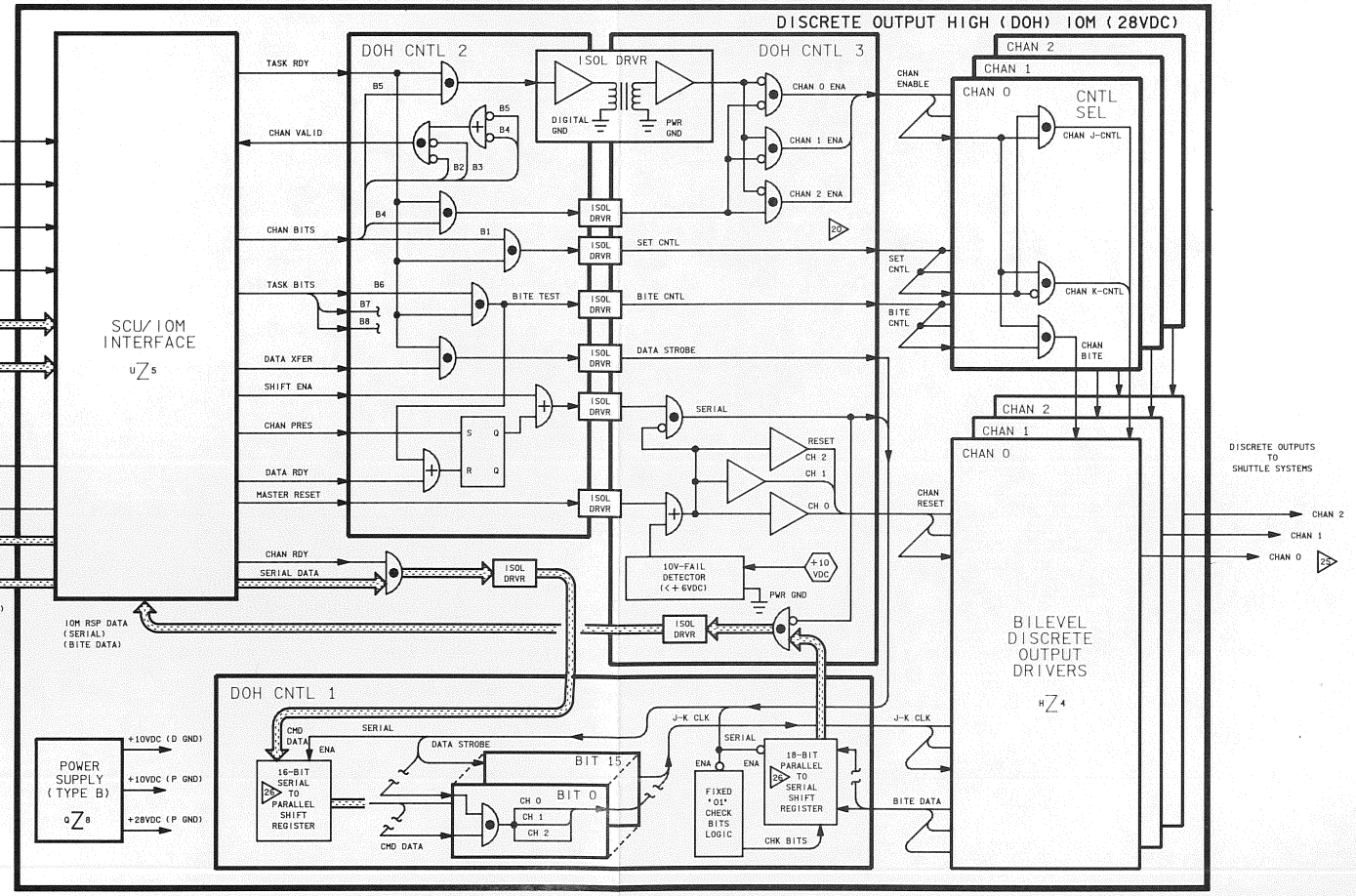

1. THE 100 KHZ OSCILLATOR BUS INPUTS AND FREQUENCY DIVIDER CIRCUIT ARE UNIQUE TO 'SXXX' SERIES MDM'S. FREE RUNNING MULTI-VIBRATOR CIRCUIT DESIGN IS UNIQUE TO 'GXXX' SERIES MDM'S. REF DWG 8.8 SHEET 1 NOTES 15 AND 16 FOR ADDITIONAL DETAIL
2. THE DUAL FUNCTIONS REPRESENTED BY THE INDICATED SHIFT REGISTERS ARE PERFORMED BY A SINGLE SERIAL-TO-PARALLEL/PARALLEL-TO-SERIAL SHIFT REGISTER CONTROLLED ESSENTIALLY BY THE SIGNAL 'SERIAL'
3. THE DOH GENERATED LOGIC 'ONE' STATE IS ~28VDC± THE LOGIC 'ZERO' STATE IS 28VDC PWR GROUND
4. AUTOMATIC COMPENSATION OF INTERNAL AMPLIFIER GAINS PERMITS THE AOD IOM OUTPUT DRIVERS TO MAINTAIN A FULL-SCALE OUTPUT DIFFERENTIAL VOLTAGE OF 5.12VDC, EITHER OUTPUT SIGNAL MAY BE SHORTED TO GROUND
   SINGLE-ENDED OUTPUT: GAIN K=0.8
   DOUBLE-ENDED-OUTPUT: GAIN K=0.4
5. AOD DRIVER SIGNAL RANGE IS +5.11 TO -5.12VDC WITH A FULL SCALE DIFFERENTIAL VOLTAGE OF 5.12VDC. WITH DOUBLE-ENDED OUTPUT, SIGNAL WILL RANGE FROM +2.56 TO -2.56VDC
   SIGNALS ARE GENERATED TO WITHIN AN ACCURACY OF 0.5 PCT OF FULL-SCALE (25 MV). D/A CONVERSION BEGINS APPROX 37.5µ SEC FROM RECEIPT OF THE CMD DATA WORD BY THE MDM. VOLTAGE SLEW TO THE DESIRED VALUE IS ACHIEVED WITHIN 30µ SEC THEREAFTER. SIGNAL WILL BE MAINTAINED AT THIS COMMANDED VALUE UNTIL RECEIPT OF A NEW CMD
6. RESET NO 1 CLEARS CH 6 THRU 9 — RESET NO 3 CLEARS CH 14,15 AND 0,1
   RESET NO 2 CLEARS CH 10 THRU 13 — RESET NO 4 CLEARS CH 2 THRU 5
7. THE DOL IOM SCU/IOM INTERFACE BUS DRIVER HYBRID UTILIZES A SINGLE SERIAL-TO-PARALLEL/PARALLEL-TO-SERIAL SHIFT REGISTER TO ACCOMPLISH THE INDICATED DUAL FUNCTIONS (FUNCTIONALLY, THE PROCESS MAY BE REPRESENTED AS INDICATED). THE SHIFT REGISTER IS CONTROLLED BY THE SIGNAL 'DLOAD'
8. SELECTED DISCRETES WITHIN A SPECIFIED CHANNEL MAY BE EITHER SET OR RESET SIMULTANEOUSLY, HOWEVER, DISCRETES CANNOT BE BOTH SET AND RESET DURING THE SAME OPERATION (TWO SEPARATE CMD DATA WORDS ARE REQUIRED). BIT 1 (B1) OF THE CHANNEL ADDRESS CONTROLS THE SET/RESET ACTION (1=SET, 0=RESET)
9. DOL IOM DRIVER VOLTAGE = +6VDC
   DOH IOM DRIVER VOLTAGE = +28VDC
   THE -10VDC IS APPLICABLE ONLY TO THE DOL IOM (UTILIZED BY THE LOGIC ZERO PULL-DOWN CIRCUIT)
10. DOL IOM GENERATED LOGIC 'ONE' STATE IS +5 ±1VDC, THE LOGIC 'ZERO' STATE IS 0 ±0.5VDC
11. DIH IOM INPUT SIGNALS OF +28VDC INTERPRETED AS A LOGIC 'ONE', 28VDC PWR GROUND AS A LOGIC 'ZERO' (INPUTS ARE THRESHOLDED AGAINST A +8VDC REF)
12. ON THE AIS IOM, ALL MINUS (-) INPUT LEAD CONNECTIONS ARE INTERNALLY GROUNDED. THUS, INPUTS AUTOMATICALLY REFERENCED TO ANALOG GROUND AND MAY BE POSITIVE OR NEGATIVE VOLTAGE WITH RESPECT TO GROUND
13. AID AND AIS IOM INPUT SIGNAL RANGE IS +5.11 TO -5.12VDC WITH A MAXIMUM FULL-SCALE DIFFERENTIAL VOLTAGE OF 5.12VDC (LARGER INPUTS INTERPRETED AS FULL SCALE. AFTER A/D CONVERSION, THE TOTAL ACCURACY OF THE DIGITAL VALUE IS WITHIN 1.0 PCT OF FULL SCALE (51 MV)
14. FOR AID (CH 0-15) AND AIS (CH 0-31) IOM BITE TEST, TWO SEPARATE A/D CONVERTED RESPONSE DATA WORDS ARE SENT TO THE GPC
    RSP WORD 1 = ANALOG BITE VALUE = 1/2(INPUT SIG)+ (BITE REF)
    RSP WORD 2 = NON-BITE VALUE = INPUT SIGNAL
    IOM BITE REFERENCE VOLTAGES
    ('+' = +5.0 VDC = BITE REF 1)
    ('-' = -2.0 VDC = BITE REF 2)

CH 0 +	CH 4 −	CH 8 −	CH 12 +	CH 16 −	CH 20 +	CH 24 +	CH 28 −
CH 1 −	CH 5 +	CH 9 +	CH 13 −	CH 17 +	CH 21 −	CH 25 −	CH 29 +
CH 2 −	CH 6 +	CH 10 +	CH 14 −	CH 18 +	CH 22 −	CH 26 −	CH 30 +
CH 3 +	CH 7 −	CH 11 −	CH 15 +	CH 19 −	CH 23 +	CH 27 +	CH 31 −

15. DIL IOM INPUT SIGNALS OF +5VDC INTERPRETED AS A LOGIC 'ONE', 0VDC AS A LOGIC 'ZERO', (INPUTS ARE THRESHOLDED AGAINST A +2.25VDC REF)
16. CHAN BITS (CHANNEL ADDRESS) LATCHED VIA 'CHAN RDY' TIMING SIGNAL AFTER FIFTH SERIAL DATA BIT CLOCKED TO OUTPUT OF SHIFT REGISTER. TASK BITS (IOM TASK) SIMILARLY LATCHED VIA 'TASL RDY' SIGNAL AFTER EIGHTH SERIAL DATA BIT
17. SIGNAL 'INPUT' CONNECTION (BUS CNTL HYBRID) IS A FUNCTION OF THE IOM TYPE:
    DOL, DOH, AOD, SIO, TAC — SIGNAL 'TASK RDY'
    DIL, DIH, AID, AIS — SIGNAL GROUND (LOGIC ZERO) (THIS FORCES SIGNAL 'I/O CNTL' ALWAYS TO LOGIC 'ONE' STATE)
    SIGNAL 'SER IOM' CONNECTION (BUS CNTL HYBRID) IS A FUNCTION OF THE IOM TYPE:
    SIO, TAC — + 10VDC (LOGIC ONE)
    ALL OTHERS — SIGNAL GROUND (LOGIC ZERO) (THIS DISABLES LOGIC GATE)
18. THE SRB MDM DOL IOM (DWG 8.8, SHT 3) DOES NOT ROUTE THE SIGNAL 'RESET' TO THE BUS RCVR MODULES AND THUS, CANNOT RESPOND TO IOM RESET CMDS FROM THE SCU
19. PARALLEL DATA LINES ROUTE 'CMD DATA' (BITS B9-B24) TO THE FOLLOWING IOM TYPES ONLY:
    AOD (12 BITS) — DOL (16 BITS) — SIO (16 BITS)
20. IF BOTH 'IOM SEL' 1&2 ARE ENABLED, ALL I/O CARD CMDS WILL BE 'LOCKED OUT' UNTIL THE FAILED 'IOM SEL' DISCRETE IS RESET (PROBABLY VIA MDM PWR CYCLE)
21. SIGNAL 'I/O CNTL' CONTROLS INITIALIZATION OF TIMER NO 2 WHICH, IN TURN, CONTROLS ALL SUBSEQUENT IOM TIMING AND CONTROL SIGNALS FOR PRESENT SCU CMD
22. IOM SIGNAL 'CLK' IS USED EXTENSIVELY (BUT NOT SHOWN) IN EVERY MODULE TO CLOCK D-TYPE AND J-K TYPE FLIP FLOPS, SHIFT REGISTERS, AND COUNTERS
23. THE 28VDC (USED ONLY BY DOH IOM'S) DOES NOT HAVE ENERGY STORAGE ASSOCIATED WITH IT, AND THEREFORE, WILL NOT TOLERATE A 2-MILLI SEC DROPOUT
24. DURING PS BITE TESTS, REGULATORS ARE 'INHIBITED' (BY REDUCING REGULATION VALUE ABOUT 2-3 PCT) IN ORDER TO FORCE OTHER REGULATOR TO CARRY FULL LOAD. IF OTHER REG HAS FAILED, OUTPUT WILL DECREASE TO REGULATION LEVEL OF PWR SUPPLY BEING TESTED
25. POWER SUPPLIES 'TYPE A' AND DOH IOM 'TYPE B' UTILIZE CURRENT OVERLOAD PROTECTION LOGIC TO PROVIDE FAULT ISOLATION (CORE PWR SUPPLY PROTECTION). IF OVERLOAD TRIP CURRENT VALUE (TYPICALLY, APPROXIMATELY TEN TIMES MAX BITE VALUE) IS EXCEEDED, TRIP LOGIC CAN BE RESET ONLY BY CYCLING THE MDM POWER SWITCH (PNL 06)
26. FOR DIL AND DIH IOM BITE TEST, INPUT DISCRETES ARE BYPASSED. INSTEAD, SPECIFIC BITS ARE SET/RESET VIA SELECTION OF BITE TEST 1 OR 2:

BITS	BITE TEST 1 CH 0	BITE TEST 1 CH 1	BITE TEST 1 CH 2	BITE TEST 2 CH 0	BITE TEST 2 CH 1	BITE TEST 2 CH 2
0- 3	RESET	RESET	SET	SET	SET	RESET
4- 7	SET	SET	RESET	RESET	RESET	SET
8-11	SET	SET	RESET	RESET	SET	RESET
12-15	RESET	SET	RESET	SET	RESET	SET

NOTES:
1. AOD IOM UTILIZES ONLY FIRST 12 BITS (NOMINALLY, ONLY FIRST TEN BITS CONTAIN DATA)

8 MDM 2

SIGNATURE	DATE	
DSGN		NATIONAL AERONAUTICS AND SPACE ADMINISTRATION LYNDON B. JOHNSON SPACE CENTER HOUSTON, TEXAS
DR		
ENGR JAMES HILL	8/24/90	MULTIPLEXER/ DEMULTIPLEXER
ENGR	8/27/90	
APP	8/28/90	
APP		SPACE SHUTTLE — DWG NO 8.8
OMNIPLAN		ALL
LTR E	PCN	126.5 X 34 — PAGE — SHEET 2 OF 3

BASIC REV E

DISCRETE INPUT HIGH (DIH) 10M (28VDC)

DISCRETE INPUT LOW (DIL) 10M (5VDC)

ANALOG INPUT DIFFERENTIAL (AID) 10M

T | S | R | Q | P | O | N | M | L | K | J

DATE: 05/07/90 | NAME: SEW | VERSION: INK.7

INPUT IOM CMD FORMAT (FROM SCU)

CHAN ADRS					IOM TASK			CHECK BITS	
B1	B2	B3	B4	B5	B6	B7	B8	B9	B10

OUTPUT IOM CMD FORMATS (FROM SCU)

CHAN ADRS					IOM TASK			16 DATA BITS ▷		CHECK BITS	
B1	B2	B3	B4	B5	B6	B7	B8	B9	B24	B25	B26

CHAN ADRS					IOM TASK			CHECK BITS	
B1	B2	B3	B4	B5	B6	B7	B8	B9	B10

IOM RESPONSE DATA WORD FORMAT (TO SCU)

16 DATA BITS ▷							CHECK BITS	
B1	B2	B3	B4	B5	B15	B16	B17	B18

IOM TASK:
- 000 - RSP DATA REQUEST (INPUT IOM'S)
- 001 - CMD DATA TRANSFER (OUTPUT IOM'S)
- 01X - RESET IOM
- 1X0 - BITE TEST 1
- 1X1 - BITE TEST 2

CHECK BITS:
- 01 - EXECUTE CMD
- OTHER - ILLEGAL CODE (TERMINATES CMD)

PS * TYPE A* (TYPICAL)

V-REG/OL TRIP 2
V-REG/OL TRIP 1
PS BITE SENSOR: BITE 1 / 2 — OUTPUT HI / LO
CURRENT OVERLOAD TRIP SENSOR
DRVR
INHIBIT
ANALOG VOLTAGE REGULATOR
V REF
V REG
FILTER
CHOPPER INPUT (50± 1KHZ)
MULTI VIBRATOR (50.51KHZ)
FREQ DIV (÷2)
DC - DC CONVERTER
DC OUTPUTS (DIGITAL GND OR ANALOG GND)
+18.6VDC P BUS 2
P BUS 1
PS BITE
OSC BUS 2
OSC BUS 1
100 KHZ
TO OTHER TYPE A POWER SUPPLIES
P BITE B1, B2
R SENSE

PS TYPE A:

AIS
AID
AOD
DOL
SIO
TAC

PS * TYPE B* (TYPICAL)

LIMITER D2
LIMITER D1 (DIGITAL GND)
LIMITER P2
LIMITER P1 (PWR GND)
PS BITE SENSOR: BITE 1 / 2 — OUTPUT HI / LO
CURRENT LIMITER SENSOR
DRVR
FILTER
+10VDC (DIGITAL GND)
+10VDC (POWER GND)
OL TRIP P2
OL TRIP P1 (PWR GND)
CURRENT OVERLOAD TRIP SENSOR
+10.8VDC (DIGITAL GND)
+10.8VDC (POWER GND)
+28VDC
FROM TYPE A, B POWER SUPPLIES
TO OTHER TYPE B POWER SUPPLIES
D BITE B1, B2
P BITE B1, B2
R SENSE

PS TYPE B:

DIL
DIH
DOH

SCU/IOM INTERFACE

SCU/IOM INTERFACE
TASK RDY
TASK BITS
CHAN RDY
TASK RDY
SCU 1/2
CHAN BITS
CHAN VALID
BITE TEST
BITE CNTL
AID CNTL
ANALOG BITE REF (±2.00VDC)
16CHO
ENA
MUX 2
MUX 4
MUX 1
MUX 3
MUX SELECT BINARY DECODER
CHV SEL
NUMBER CHAN SEL (0-15CH)
MUX SELECT
FROM SCU'S
IOM SEL
LCLK
SCU OUT BUS
TO SCU'S
IOM REPLY
TO A/D CONVERTERS
ANALOG BUS 2
ANALOG BUS 1
ANALOG MUX
MUX 2
MUX 1
CH 15
CHAN SEL
CH 0
ANALOG IN
CH 0 - CH 15
BITS B2-B5
CHAN SELECT
CHAN ADRS BINARY DECODER
POWER SUPPLY (TYPE A)
+10VDC (D GND)
+12VDC (A GND)
-12VDC (A GND)
(MSB)

SCU/IOM INTERFACE (TYPICAL)

BUS RCVR
BUS DRVR
BUS RCVR TIMER LOGIC (TIMER NO 1)
BUS DRVR TIMER LOGIC (TIMER NO 2)
BUS CNTL TIMING
I/O CNTL
SHIFT ENA
SHIFT 10 BITS
SHIFT 26 BITS
SERIAL DATA
SERIAL TO PARALLEL SHIFT REGISTER
SHIFT CLOCK
SHIFT CNTL
DATA
OUTPUT IOM RESET
LOGIC REF
10V-FAIL DETECTOR (< +6VDC)
V FAIL
MASTER RESET
MRGCB
RESET CMD
SERIAL DATA (TAC & DOH ONLY)
TIMING SIG
MASTER RESET GOOD CHK BITS (MRGCB)
CHECK BITS
IOM REPLY LOGIC
CHK BITS OK
OK TO XFER
CHV PRES
I/O DECODER BITE TEST
SIO/TAC RSP DATA
SER IOM
TASK BITS LATCH
CHAN/TASK LATCH LOGIC
BUS CNTL
TIMING SIGS
CHAN VALID
DATA XFER
CHV PRESENT
IOM RSP DATA (SERIAL)
POWER SUPPLY (TYPE B)
+10VDC (D GND)
FROM SCU'S
IOM SEL
LCLK
SCU OUT BUS
TO SCU'S
IOM REPLY
SCU IN BUS

DISCRETE INPUT LOW (DIL) IOM (5VDC)

CHAN 2 RCVR
CHAN 1 RCVR
CHAN 0 RCVR
DIL CNTL
BITE CNTL 0
BITE CNTL 1
BITE CNTL 2
BITE TEST 1
BITE TEST 2
BITE TEST
BITE CNTL
BILEVEL RCVR
(BIT 3)
(BIT 2)
(BIT 1)
(BIT 0)
V REF
DIFF AMPL
RCVR ENABLE
FILTER
BILEVEL RCVR (BITS 4 THRU 7)
BILEVEL RCVR (BITS 8 THRU 11)
BILEVEL RCVR (BITS 12 THRU 15)
CHAN 0 ENABLE
CHAN 1 ENABLE
CHAN 2 ENABLE
DIFF AMPL THRESHOLD REF LOGIC (2.25VDC)
+10 VDC
CHAN SELECT
FIXED "01" CHECK BITS LOGIC
"01" CHK BITS
18-BIT PARALLEL TO SERIAL SHIFT REGISTER
16 BITS
CHAN DISCRETES
DISCRETE INPUTS FROM SHUTTLE SYSTEMS
CHAN 2
CHAN 1
CHAN 0

DISCR

DIH CNTL 2
DIH CNTL 1
ISOL DRVR
DIGITAL GND
PWR GND
BITE TEST 1
BITE TEST 2
BITE CNTL CHAN 0
CHAN 1
CHAN 2
CHAN 0 ENABLE
CHAN 1 ENABLE
CHAN 2 ENABLE
DIFF AMPL THRESHOLD REF LOGIC (+8.0VDC)
18-BIT PARALLEL TO SERIAL SHIFT REGISTER
FIXED "01" CHECK BITS LOGIC
16 BITS
SCU/IOM INTERFACE
POWER SUPPLY (TYPE B)
+10VDC (D GND)
+10VDC (P GND)

BASIC REV E

DATE: 10/29/87	NAME: MPM	VERSION: INT. 2
DATE: 08/23/90	NAME: JMB	VERSION: BPT. 9
DATE: 08/29/90	NAME: VSH	VERSION: INT. 3

SRB ANALOG INPUT DIFFERENTIAL (AID) IOM

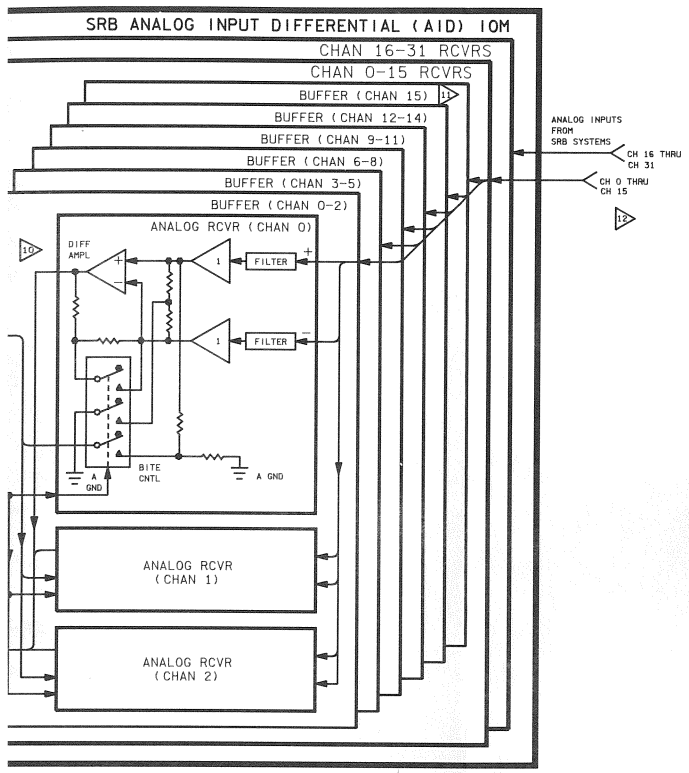

SERIAL INPUT/OUTPUT (SIO) IOM (DIGITAL)

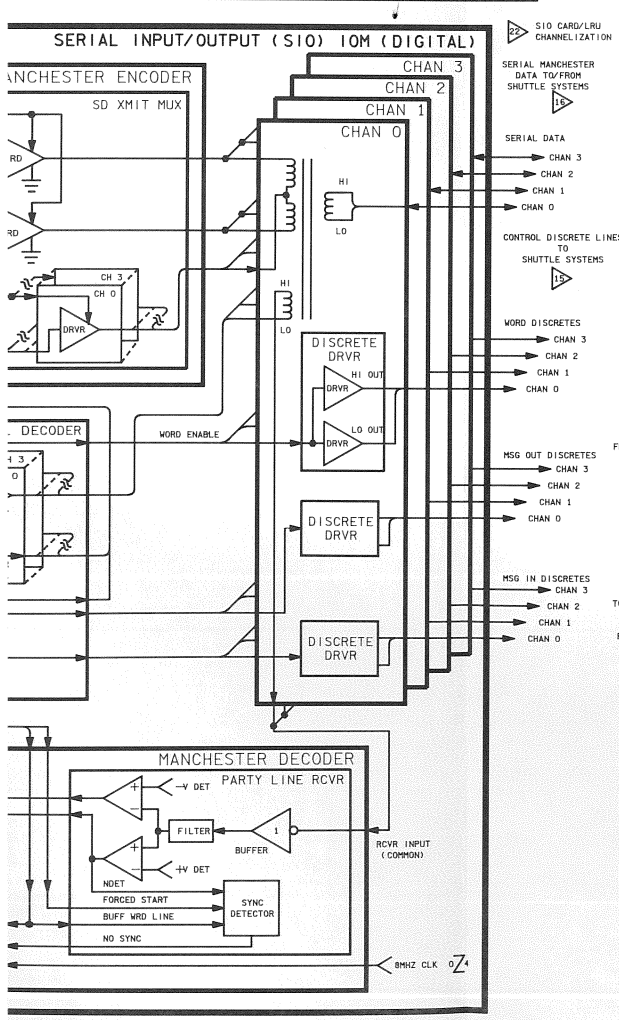

TACAN/RADAR ALTIMETER IOM (TAC)

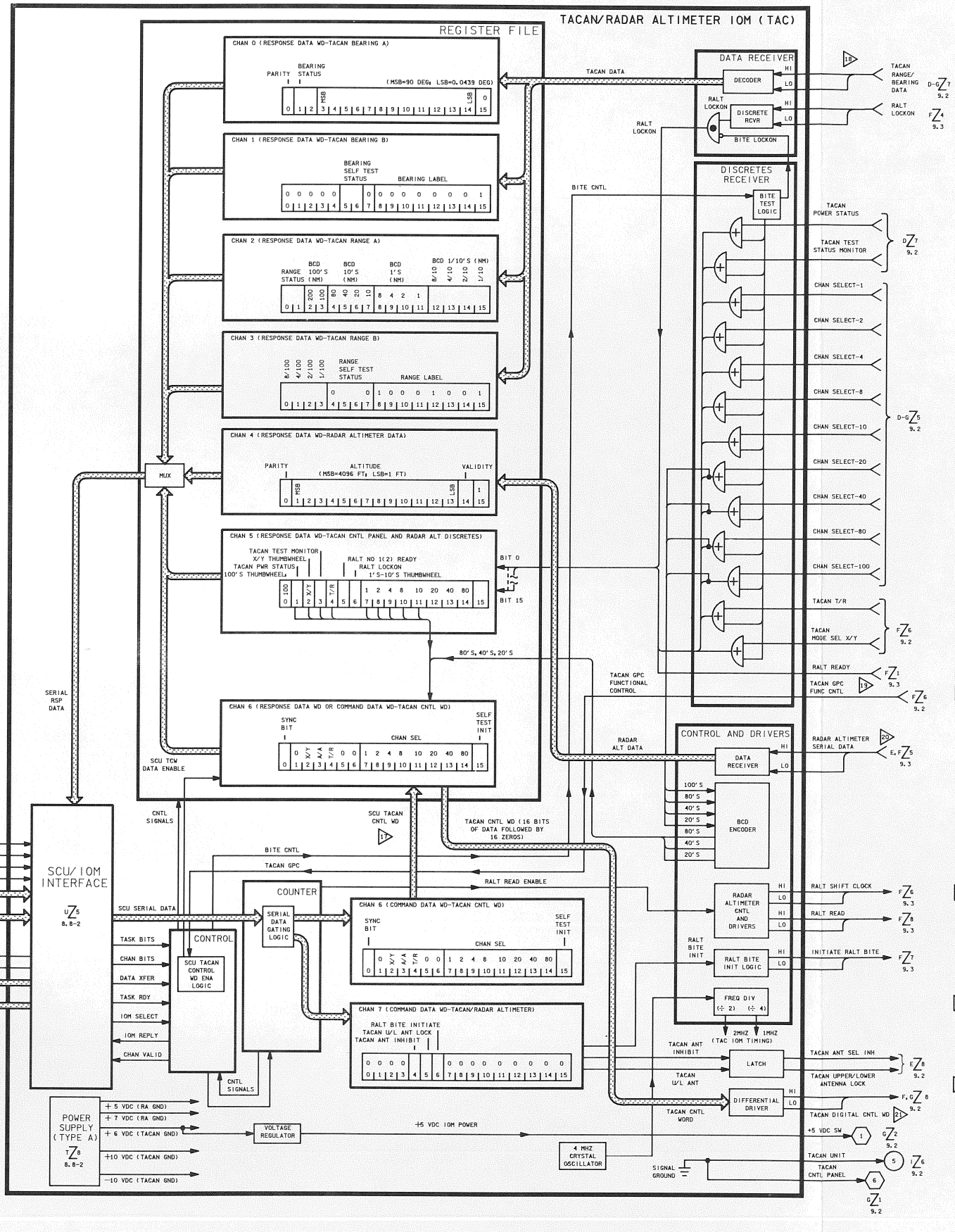

(1) SIO IOM BITE IS PREVENTED FROM BEING DETECTED BY THE SHUTTLE SUBSYSTEMS SINCE THE CONTROL DISCRETES 'WORD', 'MESSAGE IN', AND 'MESSAGE OUT' ARE NOT ENABLED DURING SIO BITE TEST

(2) SIO IOM BITE TEST PATTERN CONSISTS OF ALTERNATING ONE'S AND ZERO'S

BITE TEST NO.	16-BIT RSP DATA FIELD
1	0 1 0 1 0 1 0 1 0 1 0 1 0 1 0 1
2	1 0 1 0 1 0 1 0 1 0 1 0 1 0 1 0

(3) SRB AID IOM INPUT SIGNAL RANGE IS +5.11 TO −5.12 VDC WITH A MAXIMUM FULL-SCALE DIFFERENTIAL VOLTAGE OF 5.12 VDC (LARGER INPUTS INTERPRETED AS FULL SCALE)

AFTER A/D CONVERSION, THE TOTAL ACCURACY OF THE DIGITAL VALUE IS WITHIN 0.5 PCT OF FULL SCALE (25 MV)

NOTE THAT SRB AID IOM ACCEPTS UP TO 32 DIFFERENTIAL INPUT CHANNELS RATHER THAN 16 AS IN THE CASE OF THE ORBITER AID IOM

(4) SRB AID IOM'S CONSIST OF THREE ANALOG RECEIVERS PER BUFFER, THE CHAN 15 AND CHAN 31 ANALOG RECEIVERS ARE PHYSICALLY LOCATED ON THE SAME BUFFER MODULE

(5) FOR SRB AID IOM BITE TEST, TWO SEPARATE A/D CONVERTED RESPONSE DATA WORDS ARE SENT TO THE GPC:
RSP WORD 1 = ANALOG BITE VALUE = 1/2 (INPUT SIG) + (BITE REF)
RSP WORD 2 = NON-BITE VALUE = INPUT SIGNAL
SRB AID IOM BITE REFERENCE VOLTAGE:
('+' = + 2.0 VDC = BITE REF 1)
('−' = − 2.0 VDC = BITE REF 2)

CH 0 +	CH 4 −	CH 8 −	CH 12 +	CH 16 −	CH 20 +	CH 24 +	CH 28 −
CH 1 −	CH 5 +	CH 9 +	CH 13 −	CH 17 +	CH 21 −	CH 25 −	CH 29 +
CH 2 −	CH 6 +	CH 10 +	CH 14 −	CH 18 +	CH 22 −	CH 26 −	CH 30 +
CH 3 +	CH 7 −	CH 11 −	CH 15 +	CH 19 −	CH 23 +	CH 27 +	CH 31 −

(6) SRB AID IOM 'AID CNTL' FUNCTIONALLY IDENTICAL TO ORBITER 'AIS CNTL' EXCEPT THAT REFERENCE VOLTAGE TO BITE TEST DRIVE LOGIC IS 15.2 VDC RATHER THAN ±12 VDC

(7) DIH IOM INPUT SIGNALS OF +28 VDC INTERPRETED AS A LOGIC 'ONE'; +28 VDC PWR GROUND AS A LOGIC 'ZERO' (INPUTS ARE THRESHOLDED AGAINST A +8 VDC REF)

(8) DOL IOM GENERATED LOGIC 'ONE' STATE IS +5 ±1 VDC, THE LOGIC 'ZERO' STATE IS 0 ±0.5 VDC

(9) SELECTED DISCRETES WITHIN A SPECIFIED CHANNEL MAY BE EITHER SET OR RESET SIMULTANEOUSLY. HOWEVER, DISCRETES CANNOT BE BOTH SET AND RESET DURING THE SAME OPERATION (TWO SEPARATE CMD DATA WORDS ARE REQUIRED, BIT 1 (B1) OF THE CHANNEL ADDRESS CONTROLS THE SET/RESET ACTION (1=SET, 0=RESET)

(10) THE SRB DOL IOM POSSESSES UNIQUE LOGIC TO PROTECT AGAINST (OR LOCK OUT) CMDS TO THE IOM IN THE EVENT OF GPC OR MDM FAILURES AFTER LAUNCH (SPECIFICALLY PROTECTED ARE APU POWER ON/OFF DISCRETES AND RATE GYRO ON/OFF DISCRETES). NOMINALLY, AT ~T-37 SEC (LL1 & LR1) AND ~T-13 SEC (LL2 & LR2), A CMD IS SENT TO SET THE CHANNEL LOCKOUT LOGIC (ANY NON-BITE CMD WORD WITH A CHAN 7 ADDRESS). NOTE THAT THE GPC SOFTWARE DOES NOT SEND OUTPUT COMMANDS TO THE SRB MDM'S AFTER LAUNCH

THE DOL CMD LOCKOUT LOGIC CAN BE RESET (FOR PRE-LAUNCH OPERATIONS) ONLY BY THE FOLLOWING SEQUENCE:

THE RESET SEQUENCE IS INITIATED VIA A NON-BITE CMD WORD WITH A CHAN 27 ADRS AND A CMD DATA FIELD (BITS B9-B241 OF ALL LOGIC ZEROS (THIS ENABLES DUAL TIME-DELAY TIMERS. ALL OTHER COMMANDS ARE IGNORED (TIMER IS HELD RESET)

A SECOND COMMAND IDENTICAL TO THE FIRST MUST THEN BE SENT BETWEEN 600 TO 800 MILLISECONDS AFTER THE FIRST CMD IN ORDER TO CLEAR THE CMD LOCKOUT LOGIC (GUARANTEED 200 MILLISEC WINDOW)

IF THE SECOND CMD IS SENT PRIOR TO ~400 MSEC, THE TIMER IS RESET AND THE ENTIRE UNLOCK SEQUENCE MUST BE REPEATED

IF THE SECOND CMD IS SENT AFTER ~1080 MSEC (TIMER HAS RESET ITSELF), THE UNLOCK SEQUENCE MUST BE REPEATED (THE SECOND COMMAND IS INTERPRETED AS THE FIRST COMMAND OF A NEW UNLOCK SEQUENCE)

IF THE SECOND CMD IS SENT BETWEEN EITHER 400-600 MSEC OR 800-1080 MSEC, THE UNLOCK LOGIC MAY OR MAY NOT BE RESET DEPENDING UPON COMPONENT TOLERANCES

(11) FOR THE SRB DOL IOM, THE 'RESET' SIGNAL TO THE BUS RCVR HYBRID IS GROUNDED (LOGIC ZERO). THIS INHIBITS THE IOM FROM RESPONDING TO PWR-UP/PWR-DOWN IOM RESET COMMANDS FROM AN SCU. PWR-UP/PWR-DOWN INITIALIZATION OF THE SRB DOL OUTPUT DISCRETES IS CONTROLLED ONLY BY THE +10V FAIL DETECTOR CIRCUIT IN THE BUS RECEIVER HYBRID

(12) DIL IOM INPUT SIGNAL OF +5VDC INTERPRETED AS A LOGIC 'ONE'; 0 VDC AS A LOGIC 'ZERO' (INPUTS ARE THRESHOLDED AGAINST A +2.25 VDC REF)

(13) DIFFERENTIAL AMPLIFIER THRESHOLD VALUES FOR SRB BILEVEL DISCRETE INPUT RECEIVERS SAME AS ORBITER IOM'S (DIL+2.25 VDC; DIH+8.00 VDC)

NOTES:

(1) IF BITE TEST SELECTED (BIT 6 = LOGIC 1), BIT 8 CONTROLS WHETHER BITE TEST 1 OR 2 IS EXERCISED. IF B8 = LOGIC 0, D-TYPE FLIP FLOP (DI REGISTER) WILL BE CLOCKED AT TIME SIGNAL 'CHV PRES' IS HIGH THUS FORCING Q OUTPUT HIGH (BITE TEST 1 SELECTED) IF B8 = LOGIC 1, 'BITE ENABLE' SIGNAL WILL REMAIN LOW DURING TIME THE 'CHV PRES' SIGNAL IS HIGH AND THE D-TYPE FLIP FLOP WILL NOT BE CLOCKED. THUS, Q-NOT OUTPUT REMAINS HIGH (BITE TEST 2 SELECTED)

IF BILEVEL DISCRETE SIGNALS ARE PRESENT WHEN SRB MDM IS POWERED UP, THE FIRST RESPONSE WORD FROM A SRB DIL OR DIH TYPE IOM MAY BE ERRONEOUS DUE TO BITE TEST BITS MASKING INPUT DATA. THEREAFTER, BITE LOGIC LATCH-UP IS CLEARED AND NORMAL IOM OPERATION FOLLOWS (AFFECTS PRELAUNCH ONLY)

(2) DUE TO POTENTIAL SINGLE-POINT FAILURES, SRB MDM'S HAVE BEEN MODIFIED TO ELIMINATE CROSS STRAPPING OF REDUNDANT PWR SUPPLIES INFLIGHT. PWR SUPPLY ISOLATION IS ACHIVED BY ISSUING 'ISOLATE ENABLE' CMDS VIA THE LPS SHORTLY PRIOR TO ISSUING MDM LOCKOUT CMDS. PWR SUPPLY FAIL/SRB ELECTRICAL BUS SWITCHOVER WILL CAUSE LOSS OF ASSOCIATED SRB HYDRAULICS CHANNEL (IF PRE-LAUNCH, THIS WILL CAUSE AN AUTOMATIC LAUNCH HOLD).

(3) SIO/LRU CHANNELIZATION ASSIGNMENTS

FF'S CARD 03	FF'S CARD 11	PF'S CARD 08	PE'S CARD 15
CH00 – IMU	CH00 – ADTA	CH00 – SPARE	CH00 – IUS/SLIP(F1)
CH01 – MTU	CH01 – MLS	CH01 – PSP	CH01 – IUS/SLIP(F1)
CH02 – STKR	CH02 – SPARE	CH02 – KU-BAND(PF1)	CH02 – SPARE
CH03 – RR(FF3)	CH03 – NSP	CH03 – SPARE	CH03 – SPARE

(4) TACAN CONTROL WORD FORMAT:

			CH 1	CH 2	CH 4	CH 8	CH 10	CH 20	CH 40	CH 80	SELF TEST INIT	
1	0	X/Y	0	0							0	0
1	2	3	4	5	6	7	8	9	10	11	12	13	14	15	16	17	18	19	20	21	22	23	24	25	26	27	28	29	30	31	32

(5) RADAR ALTIMETER DATA FORMAT:

PARITY																VALIDITY	CONTROL
4096	2048	1024	512	256	128	64	32	16	8	4	2	1					
1	2	3	4	5	6	7	8	9	10	11	12	13	14	15	16

NOTE: THIS WORD IS TRANSMITTED BIT 16 FIRST

(6) TACAN GPC 'AUTO' SIGNAL IS ROUTED TO THE GPC(S) VIA DISCRETE IOM CARDS FF1-FF3 CARD 09 (DIH), CHAN 02 (BCE STRG 'B' PROM SEQUENCE INPUTS)

(7) TACAN RANGE DATA FORMAT:

RANGE STATUS (NM)	BCD 100'S (NM)		BCD 10'S (NM)		BCD 1'S (NM)				BCD 1/10'S (NM)				BCD 1/100'S (NM)				RANGE SELF-TEST STATUS		RANGE LABEL							
	200	100	80	40	20	10	8	4	2	1	8/10	4/10	2/10	1/10	8/100	4/100	2/100	1/100								
1	2	3	4	5	6	7	8	9	10	11	12	13	14	15	16	17	18	19	20	21	22	23	24	25	26	27	28	29	30	31	32

NOTE: THIS WORD IS TRANSMITTED BIT 32 FIRST

TACAN BEARING DATA FORMAT:

PARITY		BEARING STATUS		BEARING (MSB=90 DEG, LSB=0.0439 DEG)														BEARING SELF-TEST STATUS		BEARING LABEL							
		MSB													LSB												
1	2	3	4	5	6	7	8	9	10	11	12	13	14	15	16	17	18	19	20	21	22	23	24	25	26	27	28	29	30	31	32

NOTE: THIS WORD IS TRANSMITTED BIT 32 FIRST

(8) IF THE TACAN MODE SELECT SWITCH (PNL 07) IS IN 'GPC' POSITION, THE TACAN IOM CHAN 6 IS LOADED VIA GPC CMD DATA XFER (HFE OUTPUT). IF MODE SELECT SWITCH IS IN 'T/R' OR 'RCV', CHAN 6 IS LOADED WITH DATA BASED UPON CURRENT TACAN CHANNEL SELECT THUMBWHEELS

IF TACAN MODE IS 'GPC' AND THERE ARE NO GPC UPDATES (TACAN SOP INACTIVE OR DATA BUS/MDM FAILURE), THE TACAN CARD DEFAULTS TO PREVIOUS (PRIOR TO 'GPC' SELECT) CHANNEL SELECT THUMBWHEELS AS THE DATA SOURCE FOR CHAN 6

WHEN TACAN MODE SELECT SWITCH IS IN A NON 'GPC' POSITION, THE TACAN IOM ALWAYS SETS CHAN 6, BIT 0 (SYNC BIT) EQUAL TO LOGIC ONE AND BIT 15 (SELF-TEST INITIATE) TO LOGIC ZERO

(9) SIO IOM FORMAT (INPUT OR OUTPUT) APPEARING ON THE I/O DATA BUS BETWEEN THE MDM AND THE SHUTTLE SUB-SYSTEM IS 6 TO 12 VDC PEAK-TO-PEAK MANCHESTER II

SYNC										16 DATA BITS										PARITY
1	2	3	4	5	6	7	8	9	10							15	16	17	18	19	20

(10) THE THREE SIO IOM OUTPUT DISCRETES ARE EACH 3 TO 5 VDC DIFFERENTIAL SIGNALS (LOGIC 1 = +3 TO +5 VDC; LOGIC 0 = −3 TO −5 VDC)

WORD — BRACKETS A SERIAL I/O WORD, INDICATING A 20 BIT DATA TRANSFER TO/FROM THE MDM AND THE SHUTTLE SUBSYSTEM

MSG IN — BRACKETS A SERIAL I/O MESSAGE ALERTING THE SHUTTLE SUBSYSTEM TO SEND A DATA MESSAGE TO THE MDM

MSG OUT — BRACKETS A SERIAL I/O MESSAGE ALERTING THE SHUTTLE SUBSYSTEM TO RECEIVE A DATA MESSAGE FROM THE MDM

WD DISCRETE LINE GOES HI 2 1/2 MICRO-SEC AFTER MSG OUT (-IN) DISCRETE GOES HI. START OF SYNC PULSE OCCURS 1 3/4 MICRO-SEC LATER FOR MSG OUT.

WD LINE STAYS HI FOR 25 MICRO-SEC, THEN GOES LO. MSG LINE STAYS HI UNTIL MSG TRANSMISSION COMPLETE

8 MDM 3

SIGNATURE		DATE	NATIONAL AERONAUTICS AND SPACE ADMINISTRATION LYNDON B. JOHNSON SPACE CENTER HOUSTON, TEXAS
DSGN	V. ORTIZ	8/10/78	
DR	V. ORTIZ		
ENGR	JAMES HILL		MULTIPLEXER/ DEMULTIPLEXER
ENGR	[signature]	8/29/90	
APP	M. D. [signature]	9/19/90	
APP			SPACE SHUTTLE — DWG NO 8.8
OMNIPLAN	S. K. [illegible]	9.7.90	ALL
LTR E	PCN		126.5 X 34 — PAGE — SHEET 3 OF 3

BASIC REV E

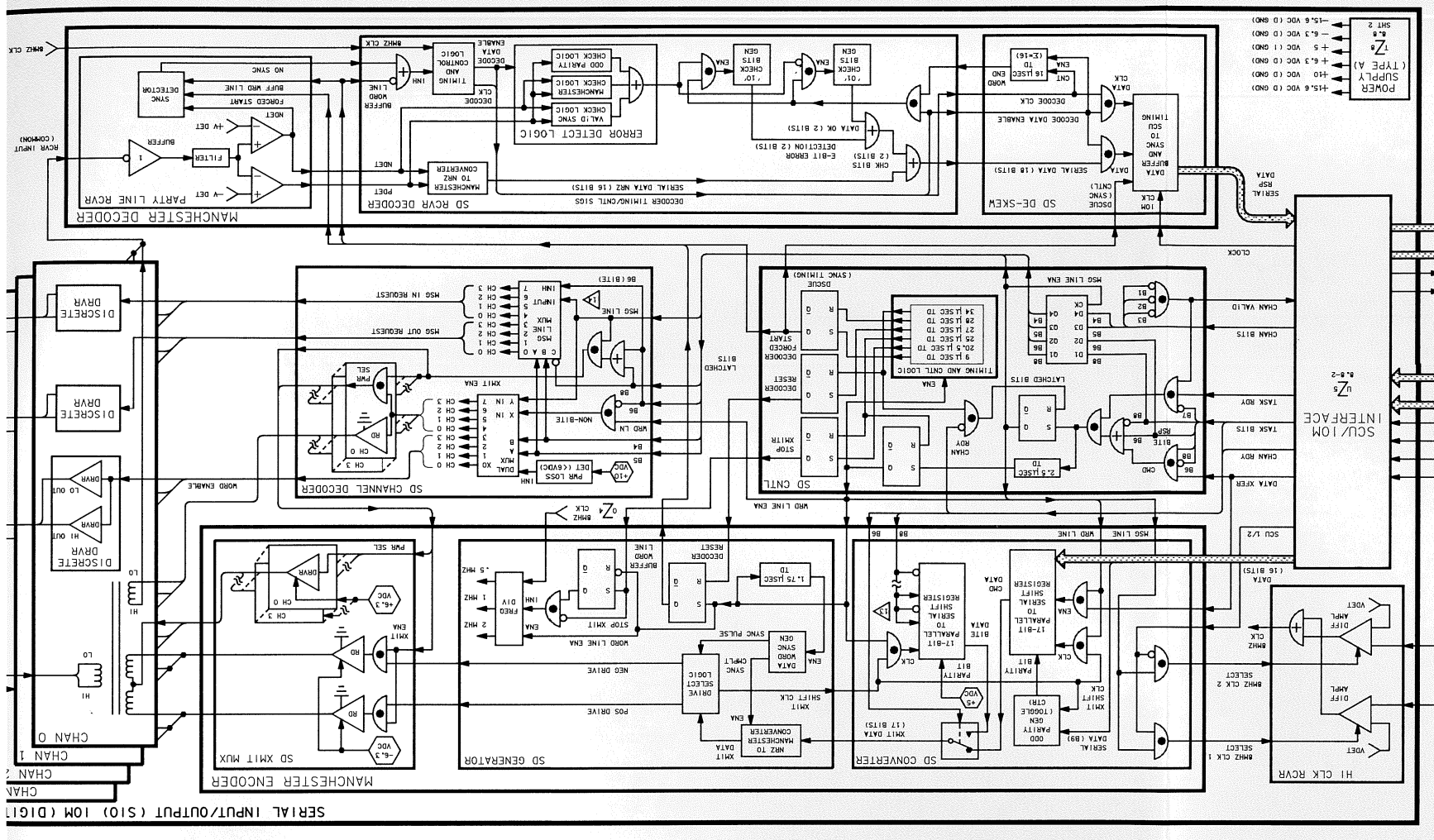
SERIAL INPUT/OUTPUT (SIO) IOM (DIGITAL)
MANCHESTER ENCODER
SD XMIT MUX
SD GENERATOR
SD CONVERTER
SD CNTL
SD CHANNEL DECODER
SD RCVR DECODER
MANCHESTER DECODER
PARITY LINE RCVR
ERROR DETECT LOGIC
SD DE-SKEW
SCU/IOM INTERFACE
DISCRETE DRVR
DISCRETE DRVR
DISCRETE DRVR
CHAN O
CHAN 1
CHAN 2
CHAN 3

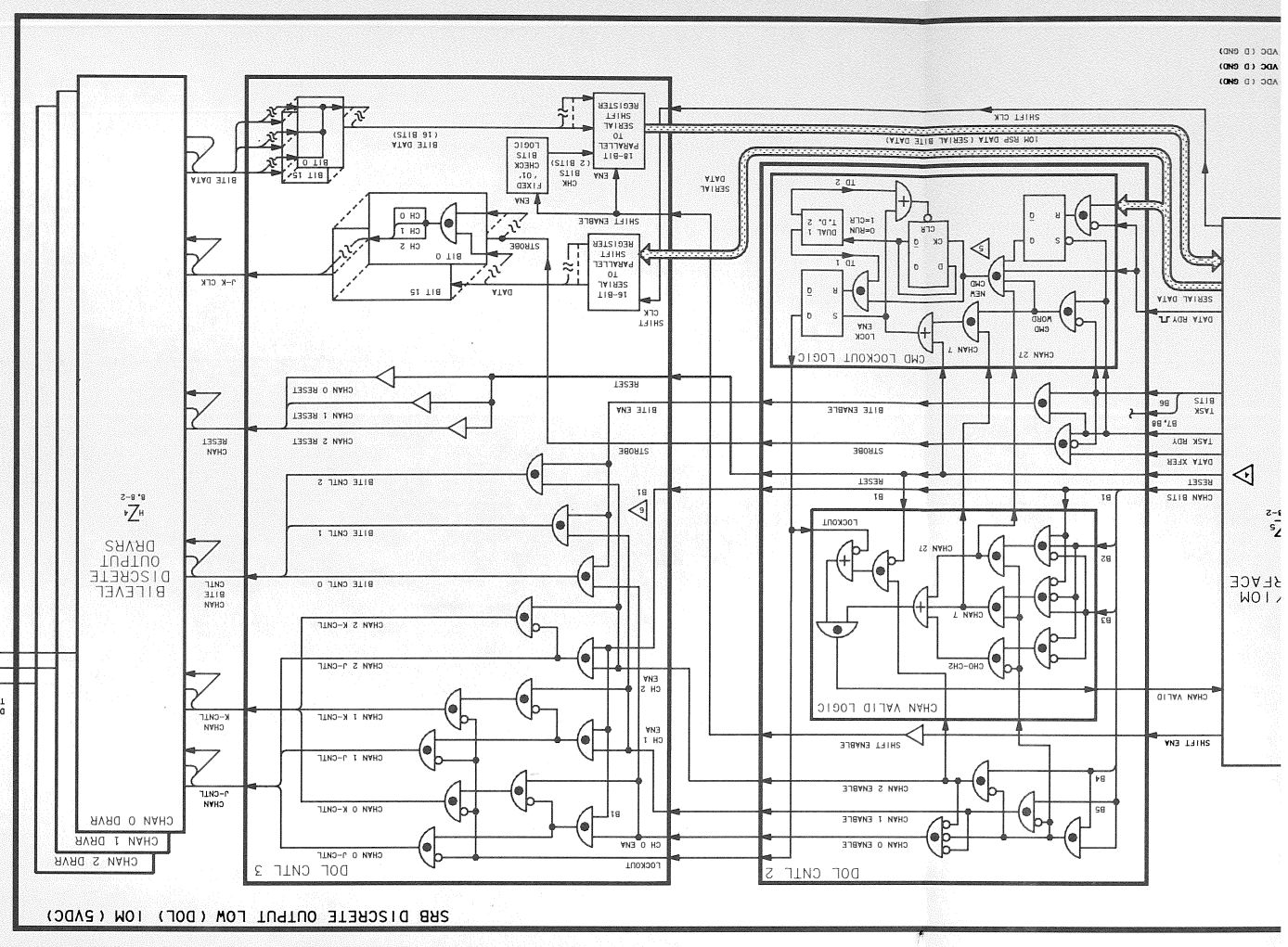
SRB DISCRETE OUTPUT LOW (DOL) IOM (5VDC)
DOL CNTL 3
DOL CNTL 2
CHAN 0 DRVR
CHAN 1 DRVR
CHAN 2 DRVR
BILEVEL DISCRETE OUTPUT DRVRS
SCU/IOM INTERFACE
CMD-CHK2
CHAN VALID
SHIFT ENABLE
BITE ENABLE
STROBE
RESET
TASK RDY
DATA XFER
SERIAL DATA
SHIFT CLK
LOCKOUT
CHAN 27
CHAN 1
CHAN 0

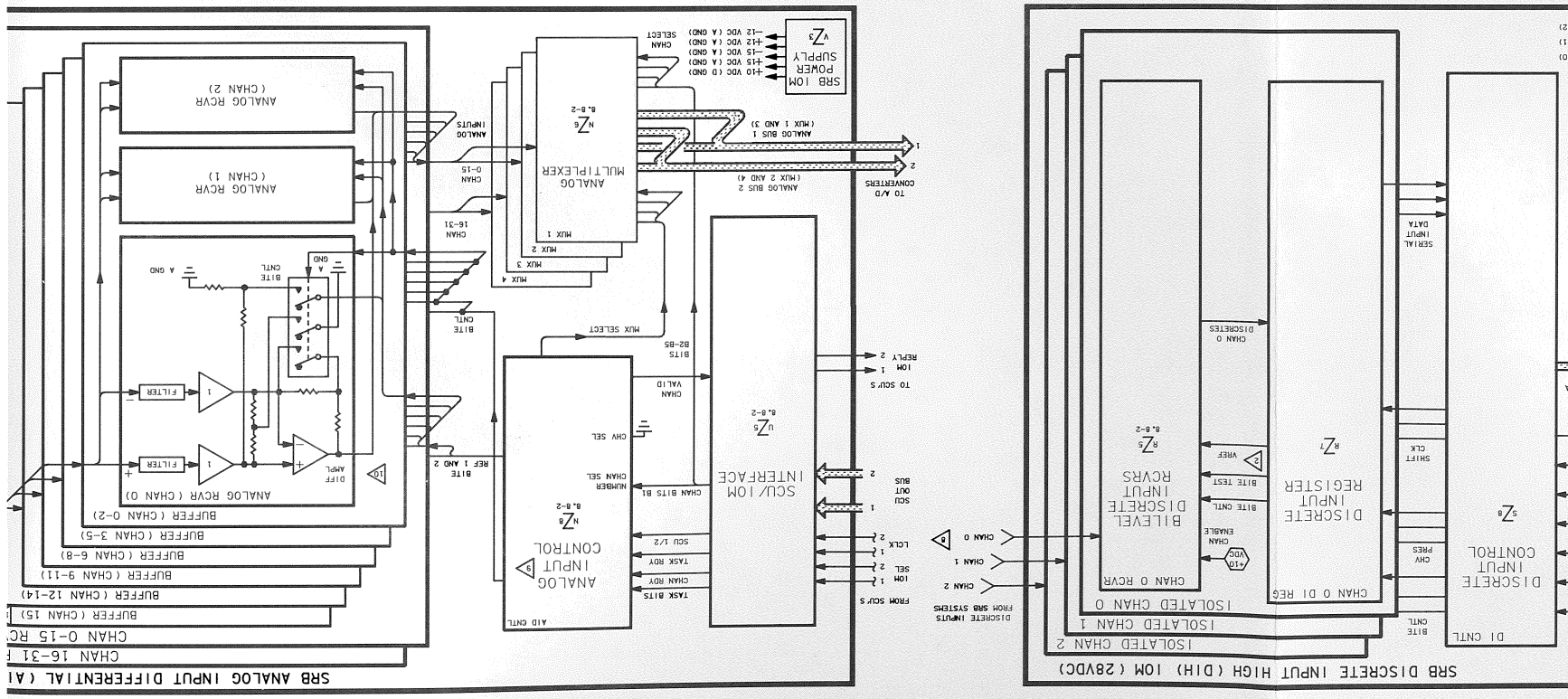
SRB ANALOG INPUT DIFFERENTIAL (AI
ANALOG RCVR (CHAN 2)
ANALOG RCVR (CHAN 1)
ANALOG RCVR (CHAN 0)
ANALOG MULTIPLEXER
ANALOG INPUT CONTROL
SCU/IOM INTERFACE
A GND
BITE CNTL
MUX SELECT
CHAN SEL
CHAN BITS B1
TASK BITS
CHAN RDY
SCU 1/2
CLOCK
SEL
IOM REPLY
TO SCU'S
FROM SCU'S
SCU OUT BUS
SCU IN BUS
ANALOG INPUTS
TO A/D CONVERTERS
SRB IOM SUPPLY

SRB DISCRETE INPUT HIGH (DIH) IOM (28VDC)
ISOLATED CHAN 0
ISOLATED CHAN 1
ISOLATED CHAN 2
BILEVEL DISCRETE INPUT RCVRS
DISCRETE INPUT REGISTER
DISCRETE INPUT CONTROL
SCU/IOM INTERFACE
CHAN 0 DISCRETES
CHAN 0 REG
DI CNTL
SERIAL INPUT DATA
SHIFT CLK
CHAN VALID
CHAN BITS
CHK PARES
SHIFT ENABLE
CLK
TASK RDY
TASK BITS
BITE CNTL
REF
SRB IOM SUPPLY
+10 VDC (GND)
+10 VDC (GND)(CH 1)
+10 VDC (GND)(CH 0)
+10 VDC (GND)(CH 2)

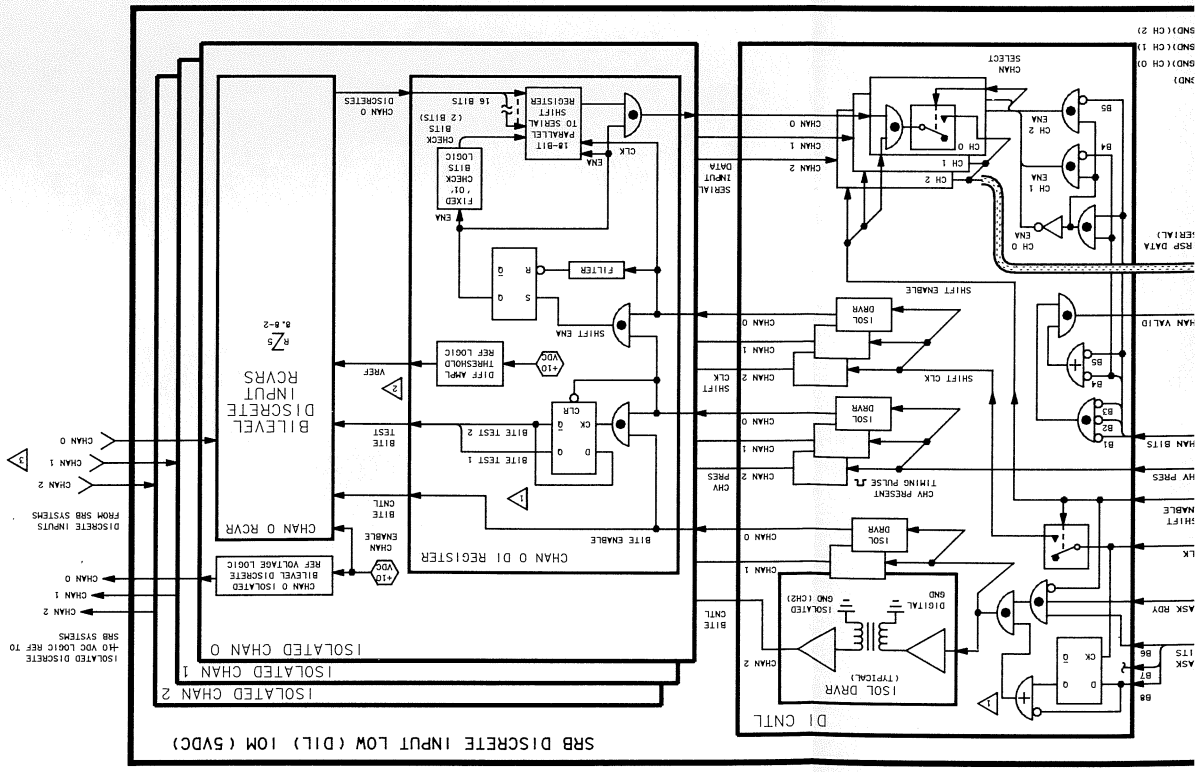
SRB DISCRETE INPUT LOW (DIL) IOM (5VDC)
ISOLATED CHAN 0
ISOLATED CHAN 1
ISOLATED CHAN 2
BILEVEL DISCRETE INPUT RCVRS
CHAN 0 RCVR
CHAN 0 DI REGISTER
DI CNTL
ISOL DRVR
SERIAL DATA INPUT
SHIFT ENABLE
SHIFT CLK
CHAN VALID
CHAN BITS
CHK PRES
TASK RDY
BITE ENABLE
BITE CNTL
BITE TEST 1
BITE TEST 2
DISCRETE INPUTS FROM SRB SYSTEMS
ISOLATED DISCRETE REF VOLTAGE LOGIC
+10 VDC REF
+10 VDC LOGIC REF TO SRB SYSTEMS
TIMING PULSE
DISCRETES
CHAN SELECT
16 BITS
18-BIT PARALLEL TO SERIAL SHIFT REGISTER
FIXED '0', CHECK BITS (2 BITS)
FILTER
SHIFT ENA
DIFF AMPL THRESHOLD REF LOGIC
ISOLATED (TYPICAL)
DIGITAL GND
CHAN 0
CHAN 1
CHAN 2

DATE: 08/29/90 | NAME: VSH | VERSION: IN&T 3

IOM TASK:
000 - RSP DATA REQUEST (INPUT IOM'S)
001 - CMD DATA TRANSFER (OUTPUT IOM'S)
01X - RESET IOM
1X0 - BITE TEST 1
1X1 - BITE TEST 2
CHECK BITS:
01 - EXECUTE CMD
OTHER - ILLEGAL CODE (TERMINATES CMD)

INPUT IOM CMD FORMAT (FROM SCU)

CHAN ADRS					IOM TASK			CHECK BITS	
B1	B2	B3	B4	B5	B6	B7	B8	B9	B10

OUTPUT IOM CMD FORMATS (FROM SCU)

CHAN ADRS					IOM TASK			16 DATA BITS				CHECK BITS	
B1	B2	B3	B4	B5	B6	B7	B8	B9	B24	B25	B26		

CHAN ADRS					IOM TASK			CHECK BITS	
B1	B2	B3	B4	B5	B6	B7	B8	B9	B10

IOM RESPONSE DATA WORD FORMAT (TO SCU)

16 DATA BITS									CHECK BITS	
B1	B2	B3	B4	B5	B15	B16	B17	B18		

SRB DISCRETE INPUT LOW (DIL) IOM (5VDC)

SRB DISCRETE INPUT HIGH (DIH) IOM (2

SRB DISCRETE OUTPUT LOW (DOL) IOM (5VDC)

SRB IOM PWR SUPPLY MODULE (IOM 4-IOM 7)
SRB IOM PWR SUPPLY MODULE (IOM 0-IOM 3)

BASIC REV E

DATE: 08/17/90	NAME: VSH	VERSION: INR: 8
DATE: 09/25/95	NAME: JHB	VERSION: BPT: 2
DATE: 01/24/96	NAME: MAG	VERSION: INR: 9

MASTER TIMING UNIT

UPDATE CKT NO 3 DATA
UPDATE CKT NO 2 DATA
UPDATE CKT NO 1 DATA

RD 4 RECEIVED (UD 3)
RD 4 RECEIVED (UD 2)
RD 4 RECEIVED (UD 1)
BSR BIT 16
V75 X35560 (X36560) VALID UPDATE RECEIVED 1=VALID UPDATE, 0=UPDATE EXECUTED 5 5/5

BITE STATUS REGISTER 5
BITE STATUS REGISTER 4
BITE STATUS REGISTER 3
BITE STATUS REGISTER 2
BITE STATUS REGISTER 1
REGISTER BITS 16 15 14 13 12 11 10 9 8 7 6 5 4 3 2 1
INPUT BITE DATA

FF 3 I/O INTERFACE
FF 2 I/O INTERFACE
FF 1 I/O INTERFACE
VOLTAGE REGULATOR
WORD SIGNAL (UPDATE)
MESSAGE OUT (UPDATE) DISCRETE
10VDC
5VDC
UPDATE DATA (4 WORDS)
MANCHESTER ENCODER
RCVR
XMITTER
ACCUM 3 DATA
ACCUM 2 DATA
ACCUM 1 DATA
LOAD REGISTER (ACCUM 3)
LOAD REGISTER (ACCUM 2)
LOAD REGISTER (ACCUM 1)
WORD SIGNAL
MESSAGE IN DISCRETE
WORD DISCRETE

BITE DATA
BITE, MET, GHT (ACCUM 3)
BITE, MET, GHT (ACCUM 2)
BITE, MET, GHT (ACCUM 1)

VOTED DEMAND
VOTER
1 FAILED
2 FAILED
3 FAILED

OF 2 INTERFACE
OF 1 INTERFACE
1 MHZ CLOCK
LOAD REGISTER

V75 X3551D VOTED DMD CHAN C FAIL 0=GOOD 5 5/5 (X36510)
V75 X3550D VOTED DMD CHAN B FAIL 0=GOOD 5 5/5 (X36500)
V75 X3549D VOTED DMD CHAN A FAIL 0=GOOD 5 5/5 (X36490)
BSR BIT 11
BSR BIT 10
BSR BIT 9

GHT IRIG-B FORMAT CONVERTER
100 HZ CLOCK
LOAD REGISTER
GHT (ACCUM 3)
GHT (ACCUM 2)
GHT (ACCUM 1)
CHAN 3 CONVERTER
CHAN 2 CONVERTER
CHAN 1 CONVERTER
NRZ TO IRIG-B
CHAN 3
CHAN 2
CHAN 1
VOTER

IRIG B BITE
V75 X3552D ANY IRIG-B CHAN FAIL 0=GOOD 5 5/5 (X36520)
BSR BIT 12

MET IRIG-B FORMAT CONVERTER (TYPICAL)
HET (ACCUM 3)
HET (ACCUM 2)
HET (ACCUM 1)

F/D NO 3 4.608 MHZ
F/D NO 2 4.608 MHZ
5.6 KHZ

GPC-MTU CHAN 1 DAY/HR UPDATE V75X3020B (X3120B) (X3220B)
GPC-MTU CHAN 1 MIN/SEC UPDATE V75X3021B (X3121B) (X3221B)
GPC-MTU CHAN 1 MILLISEC UPDATE V75X3022B (X3122B) (X3222B)
GPC-MTU CHAN 1 MODE CONTROL V75X3071B (X3171B) (X3271B)
GPC-MTU CHAN 1 COINCIDENCE TIME V75X3072B (X3172B) (X3272B)
FF 1 (FF 2) (FF 3)

TO GPCS
MESSAGE IN DISCRETE
MESSAGE OUT DISCRETE
WORD DISCRETE

V75 W3504D MTU 1 - GHT (W3604D)
V75 W3514D MTU 1 - MET (W3614D)
V75 M3540P MTU BITE
5 5/5
OF 1 (OF 2)

NETWORK CONSEC 1
NETWORK CONSEC 2
PDI
FWD MSN TIMER GHT
FWD MISSION TIMER MET
ORBITER TIMING BUFFER
PAYLOAD TIMING BUFFER
GHT/MET
MADS
VSU CCTV
ACIP (OV 102 ONLY)
SHALL PAYLOAD
SEP CAMERA
PAYLOAD
AFT MISSION TIMER
SIGNAL PROCESSOR (PAYLOAD) 1024 KHZ
FM SIGNAL PROCESSOR 1 1024 KHZ
FM SIGNAL PROCESSOR 2 1024 KHZ
10 HZ FWD EVENT TIMER
AFT EVENT TIMER
PCM MASTER UNIT NO 1
PCM MASTER UNIT NO 2
1024 KHZ
4.608 MHZ
100 HZ
10 HZ
1 KHZ
TO PAYLOAD STA DISTRIBUTION PNL

1. THE 5.6 KHZ TIMING TO THE EPS INVERTER ARRAY HAS BEEN DISCONNECTED
2. PML L12 IS MISSION RECONFIGURABLE
3. MAXIMUM OUTPUT OF THE MTU, BOTH GHT AND MET IS 399d 23h 59h 59h 999. 875
4. GHT OUTPUT WILL ROLLOVER TO 001d 00h 00h 00h 000. 000 AT 125 MICROSECONDS PAST GHT OF:
   365d 23h 59h 59h 999. 875
   366d 23h 59h 59h 999. 875
   375d 23h 59h 59h 999. 875
   376d 23h 59h 59h 999. 875
   399d 23h 59h 59h 999. 875
5. CYCLING MTU POWER WILL RESULT IN MET RESET TO ZERO AND GHT RESET TO DAY ONE. THIS IS NOT A CONTROLLED FUNCTION, BUT A RESULT OF THE CIRCUIT CHARACTERISTICS
6. BITE WILL BE SET IF DRIFT DIFFERENTIAL EXCEEDS 0.04 HZ DURING A 1 MINUTE CYCLE
7. EACH TIMING BUFFER OUTPUTS 8 GHT AND 4 MET IRIG B FORMAT SIGNALS
8. THE CIRCUIT FOR THE VOTER LOGIC IS THE SAME AS THE CIRCUIT WITHIN THE VOTED DEMAND BLOCK
9. WHEN A MET OR GHT RESET IS ISSUED THE MET RESET TIME IS 000d 00h 00h 00. 000 AND THE GHT RESET IS 001d 00h 00h 00. 000
10. THE IRIG-B SHIFT REGISTERS CONTAIN ONLY THE TIME DATA FOR DAYS - HOURS - MINUTES - SECONDS
11. DEMAND OUTPUT WORD FORMAT

GHT: WORD 1 | WORD 2 | WORD 3 — DATA 4 19
MET: WORD 4 | WORD 5 | WORD 6 — DATA 4 19
BITE STATUS: WORD 7 — DATA 4 19

BIT	FUNCTION
WORD 1/4	
1-03	SYNC
4-13	DAYS
14-19	HOURS
20	PARITY
WORD 2/5	
1-03	SYNC
4-10	MINUTES
11-17	SECONDS
18-19	SPARE
20	PARITY
WORD 3/6	
1-03	SYNC
4-06	SPARE
7-19	MILLISECONDS
20	PARITY

REFERENCE BITE STATUS REGISTER

BIT	FUNCTION	0	1
WORD 7 (BITE)			
1-3	WORD SYNC		
4	CONTROLLING OSC	NO 2 GOOD	NO 1 FAIL
5	OSC NO 1 AMPLITUDE		
6	OSC NO 2 AMPLITUDE		
7	OSC FREQUENCY DIFFERENCE		
8	OSC NO 1 TEMP		
9	OSC NO 2 TEMP		
10	PS NO 1 VOLT AMPLITUDE		
11	PS NO 2 VOLT AMPLITUDE		
12	VOTED DEMAND CH-A		
13	VOTED DEMAND CH-B		
14	VOTED DEMAND CH-C		
15	ANY IRIG "B" CHANNEL	GOOD	FAIL
16	FREQ DIVISION NO 1		
17	FREQ DIVISION NO 2		
18	FREQ DIVISION NO 3		
19	VALID UPDATE RECEIVED 1 = VALID UPDATE RECEIVED 0 = UPDATE EXECUTED OR INVALID TRANSMISSION IF BIT NEVER SET TO 1	GOOD	FAIL
20	PARITY		

12. UPDATE WORD FORMAT

WORD 1 | WORD 2 | WORD 3 | WORD 4 — DATA 4 19

BIT	FUNCTION
WORD 1	
1-03	SYNC
4-13	DAYS
14-19	HOURS
20	PARITY
WORD 2	
1-03	SYNC
4-10	MINUTES
11-17	SECONDS
18-19	SPARE
20	PARITY

BIT	FUNCTION
WORD 3	
1-03	SYNC
4-06	SPARE
7-19	MILLISECONDS
20	PARITY
WORD 4	
1-03	WORD SYNC
4-07	MODE CONTROL
8-14	COINCIDENCE TIME (MINUTES)
15-19	SPARE
20	PARITY

13. NOT USED
14. THE MTU IS LOCATED IN FORWARD BAY 3B. FINE TUNING OF EACH OSCILLATOR IS POSSIBLE ON THE GROUND THROUGH AN EXTERNAL ADJUSTMENT SCREW TO A RESOLUTION OF ±1 PART IN 10^{10} BY USING A CESIUM BEAM

NOTES:
15. DETECT RELATIVE FREQUENCY DIFFERENTIAL OF 0.04 HZ WITHIN A 60 SEC PERIOD

9 MTU

SIGNATURE	DATE	
DSGN L. DUMIS	11/15/79	NATIONAL AERONAUTICS AND SPACE ADMINISTRATION LYNDON B. JOHNSON SPACE CENTER HOUSTON, TEXAS
DR		
ENGR T. ALLEN		MASTER TIMING UNIT
ENGR	1/30/96	
APP	1/30/96	
APP H. E. Clarvey	1-31-96	SPACE SHUTTLE
CADS S. K. Kurbra	6/7/96	ALL
LTR E	PCN 6	126.5 X 34

DWG NO 8.9
PAGE SHEET 1 OF 1

BASIC REV E-6

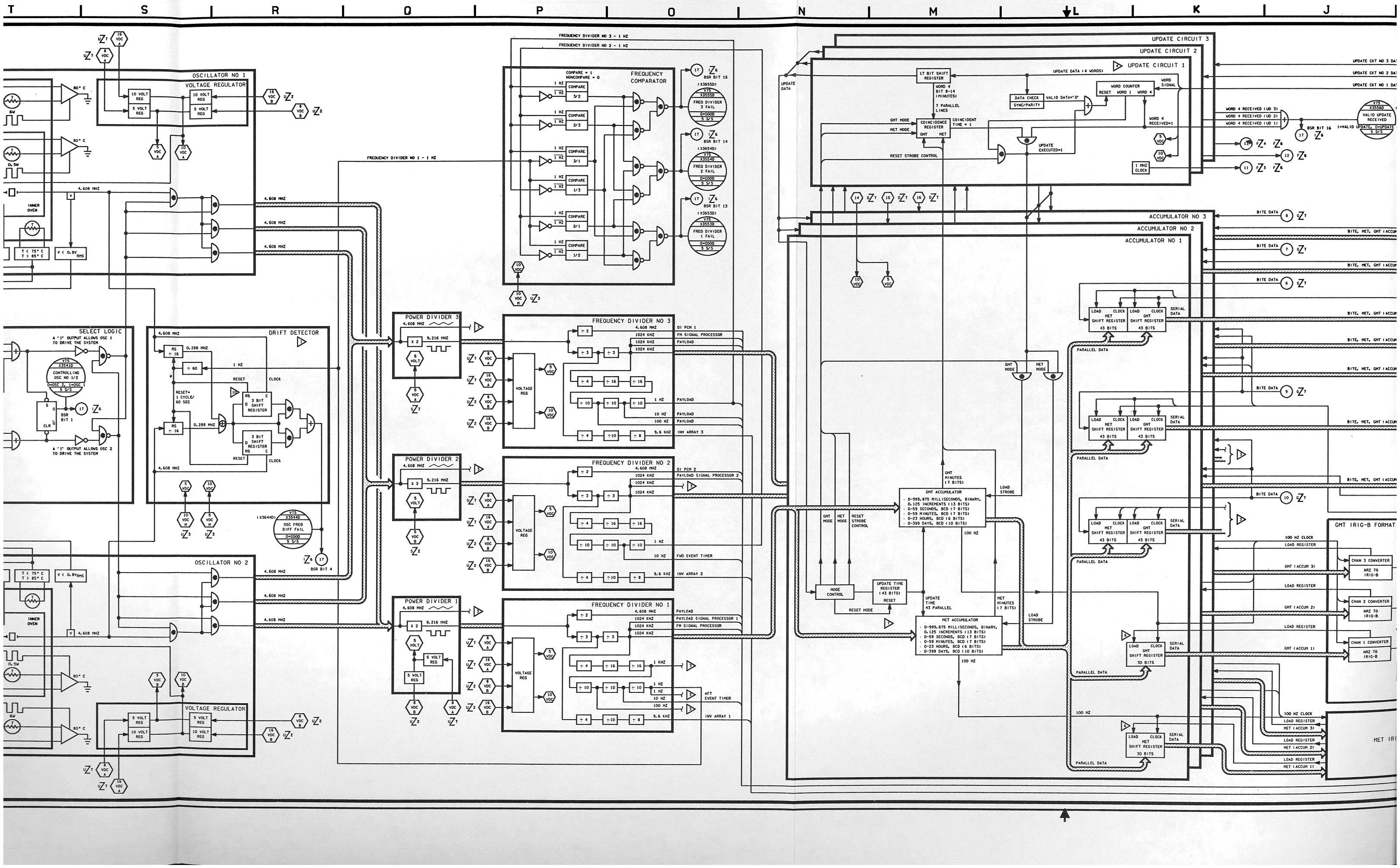

T
S
R
Q
P
O
N
M
L
K
J
OSCILLATOR NO 1
VOLTAGE REGULATOR
10 VOLT REG
5 VOLT REG
INNER OVEN
4.608 MHZ
SELECT LOGIC
A '1' OUTPUT ALLOWS OSC 1 TO DRIVE THE SYSTEM
A '1' OUTPUT ALLOWS OSC 2 TO DRIVE THE SYSTEM
CONTROLLING OSC NO 1/2
DRIFT DETECTOR
RESET= 1 CYCLE/ 60 SEC
3 BIT SHIFT REGISTER
OSC FREQ DIFF FAIL
OSCILLATOR NO 2
VOLTAGE REGULATOR
FREQUENCY DIVIDER NO 3 - 1 HZ
FREQUENCY DIVIDER NO 2 - 1 HZ
FREQUENCY DIVIDER NO 1 - 1 HZ
FREQUENCY COMPARATOR
COMPARE = 1
NONCOMPARE = 0
FREQ DIVIDER 3 FAIL
FREQ DIVIDER 2 FAIL
FREQ DIVIDER 1 FAIL
BSR BIT 15
BSR BIT 14
BSR BIT 13
POWER DIVIDER 3
POWER DIVIDER 2
POWER DIVIDER 1
FREQUENCY DIVIDER NO 3
FREQUENCY DIVIDER NO 2
FREQUENCY DIVIDER NO 1
VOLTAGE REG
OI PCM 1
FM SIGNAL PROCESSOR
PAYLOAD
INV ARRAY 3
OI PCM 2
PAYLOAD SIGNAL PROCESSOR 2
FWD EVENT TIMER
INV ARRAY 2
PAYLOAD SIGNAL PROCESSOR 1
AFT EVENT TIMER
INV ARRAY 1
UPDATE CIRCUIT 3
UPDATE CIRCUIT 2
UPDATE CIRCUIT 1
17 BIT SHIFT REGISTER
COINCIDENCE REGISTER
DATA CHECK SYNC/PARITY
WORD COUNTER
WORD SIGNAL
UPDATE EXECUTED=1
RESET STROBE CONTROL
1 MHZ CLOCK
ACCUMULATOR NO 3
ACCUMULATOR NO 2
ACCUMULATOR NO 1
BITE DATA
SERIAL DATA
PARALLEL DATA
GHT MODE
MET MODE
GHT ACCUMULATOR
MET ACCUMULATOR
MODE CONTROL
UPDATE TIME REGISTER (43 BITS)
RESET MODE
LOAD STROBE
GHT IRIG-B FORMAT
CHAN 3 CONVERTER
CHAN 2 CONVERTER
CHAN 1 CONVERTER
NRZ TO IRIG-B

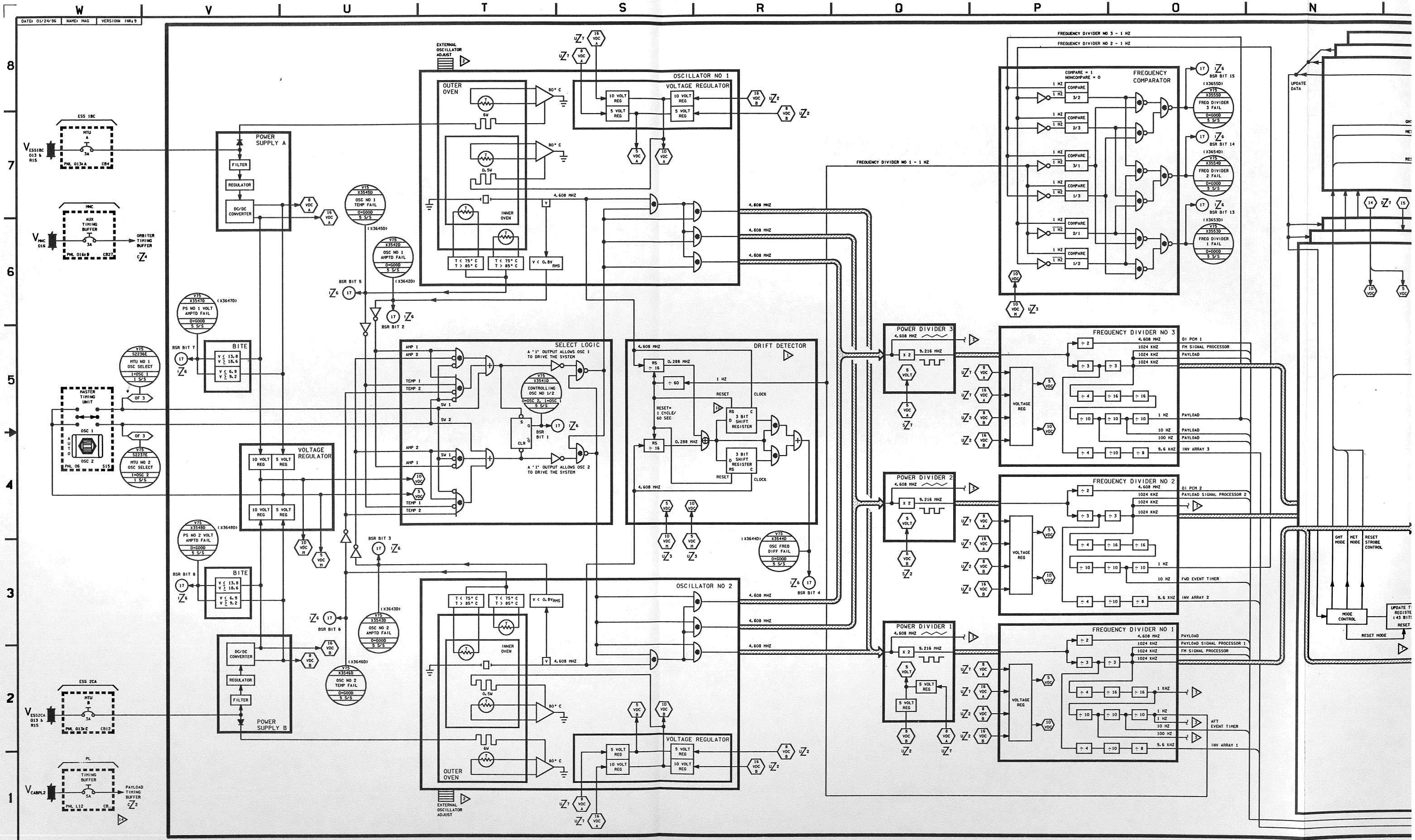

DATE: 01/24/96
NAME: MAG
VERSION: INK:9
POWER SUPPLY A
POWER SUPPLY B
OSCILLATOR NO 1
OSCILLATOR NO 2
OUTER OVEN
INNER OVEN
VOLTAGE REGULATOR
SELECT LOGIC
DRIFT DETECTOR
BITE
POWER DIVIDER 3
POWER DIVIDER 2
POWER DIVIDER 1
FREQUENCY COMPARATOR
FREQUENCY DIVIDER NO 3
FREQUENCY DIVIDER NO 2
FREQUENCY DIVIDER NO 1
MASTER TIMING UNIT
MODE CONTROL

BASIC REV E-6

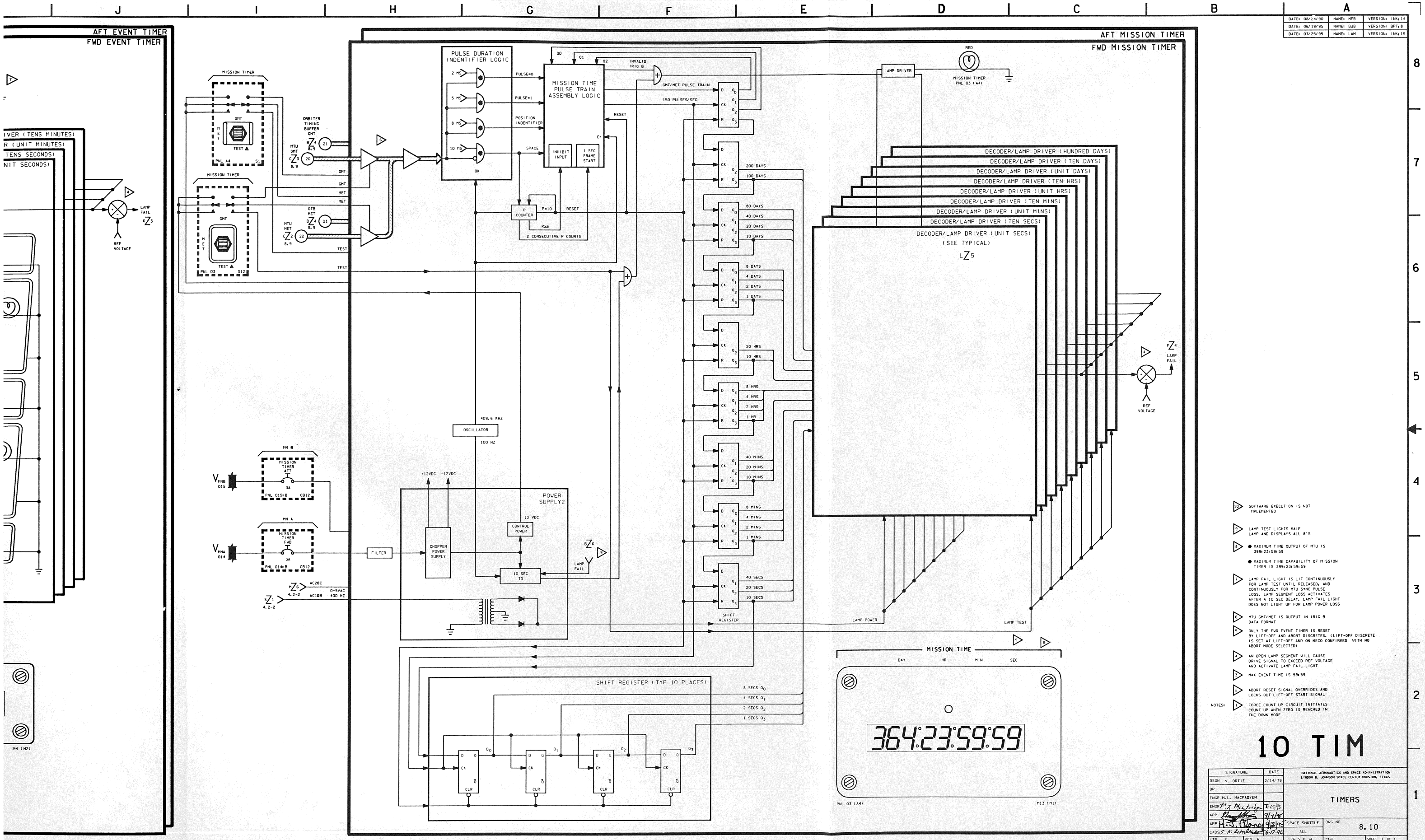

DATE: 08/24/90	NAME: MFB	VERSION: INK: 14
DATE: 06/19/95	NAME: BJB	VERSION: BPT: 8
DATE: 07/25/95	NAME: LAM	VERSION: INK: 15

10 SOFTWARE EXECUTION IS NOT IMPLEMENTED

9 LAMP TEST LIGHTS MALF LAMP AND DISPLAYS ALL 8'S

8 ● MAXIMUM TIME OUTPUT OF MTU IS 399:23:59:59

● MAXIMUM TIME CAPABILITY OF MISSION TIMER IS 399:23:59:59

7 LAMP FAIL LIGHT IS LIT CONTINUOUSLY FOR LAMP TEST UNTIL RELEASED, AND CONTINUOUSLY FOR MTU SYNC PULSE LOSS. LAMP SEGMENT LOSS ACTIVATES AFTER A 10 SEC DELAY. LAMP FAIL LIGHT DOES NOT LIGHT UP FOR LAMP POWER LOSS

6 MTU GMT/MET IS OUTPUT IN IRIG B DATA FORMAT

5 ONLY THE FWD EVENT TIMER IS RESET BY LIFT-OFF AND ABORT DISCRETES. (LIFT-OFF DISCRETE IS SET AT LIFT-OFF AND ON MECO CONFIRMED WITH NO ABORT MODE SELECTED)

4 AN OPEN LAMP SEGMENT WILL CAUSE DRIVE SIGNAL TO EXCEED REF VOLTAGE AND ACTIVATE LAMP FAIL LIGHT

3 MAX EVENT TIME IS 59:59

2 ABORT RESET SIGNAL OVERRIDES AND LOCKS OUT LIFT-OFF START SIGNAL

NOTES: 1 FORCE COUNT UP CIRCUIT INITIATES COUNT UP WHEN ZERO IS REACHED IN THE DOWN MODE

10 TIM

SIGNATURE	DATE	NATIONAL AERONAUTICS AND SPACE ADMINISTRATION LYNDON B. JOHNSON SPACE CENTER HOUSTON, TEXAS
DSGN V. ORTIZ	2/14/79	TIMERS
DR		
ENGR M.L. MACFADYEN		
ENGR M.L. MacFadyen	7/25/95	
APP [signature]	9/7/95	
APP H.J. Clancy	9/8/95	SPACE SHUTTLE ALL — DWG NO 8.10
CADS S.K. Linderson	6-17-96	
LTR E — PCN 6		126.5 X 34 — PAGE — SHEET 1 OF 1

BASIC REV E-6

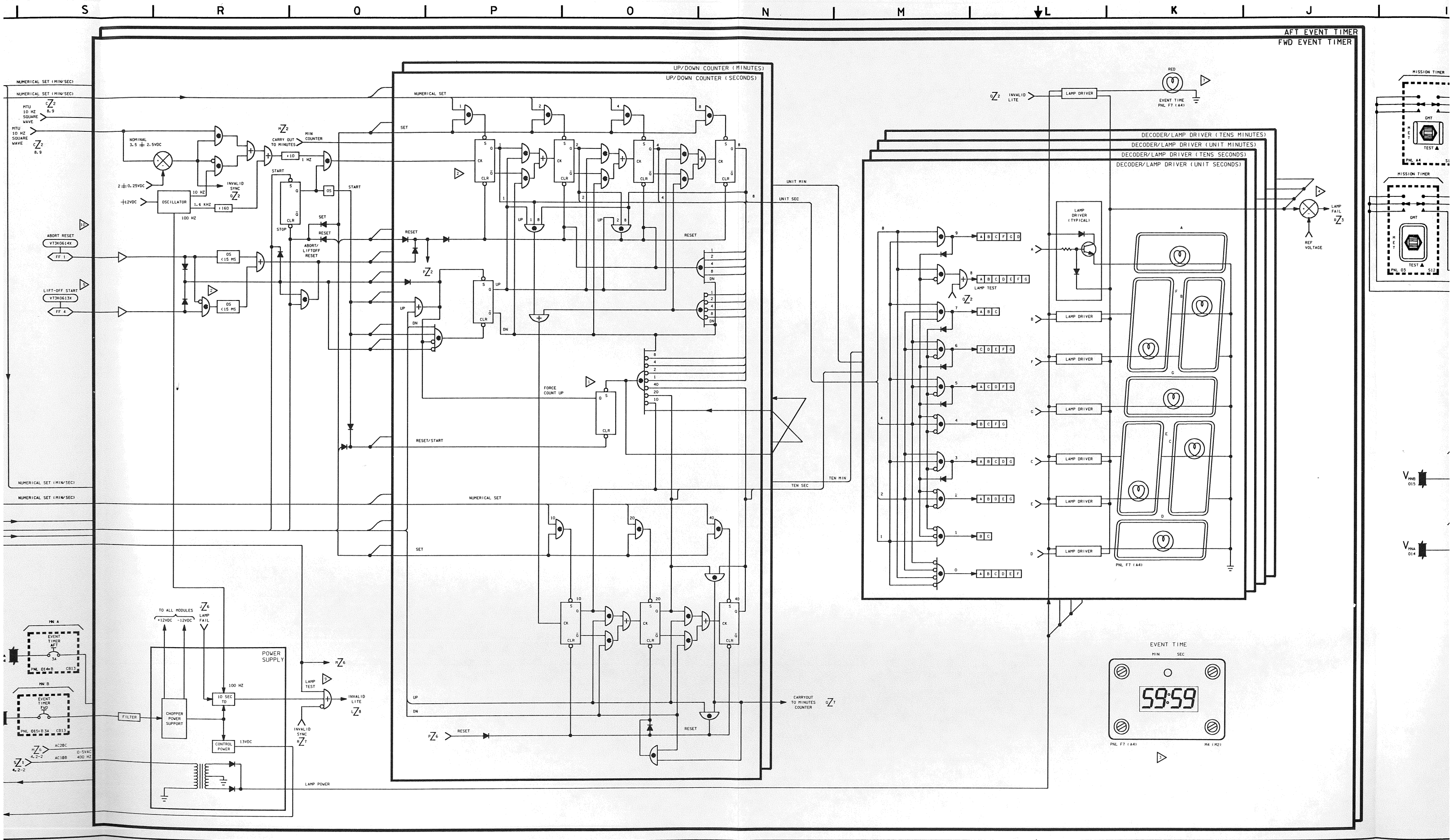

AFT EVENT TIMER
FWD EVENT TIMER
UP/DOWN COUNTER (MINUTES)
UP/DOWN COUNTER (SECONDS)
DECODER/LAMP DRIVER (TENS MINUTES)
DECODER/LAMP DRIVER (UNIT MINUTES)
DECODER/LAMP DRIVER (TENS SECONDS)
DECODER/LAMP DRIVER (UNIT SECONDS)
NUMERICAL SET (MIN/SEC)
MTU 10 HZ SQUARE WAVE
NOMINAL 3.5 ± 2.5VDC
OSCILLATOR
INVALID SYNC
CARRY OUT TO MINUTES
MIN COUNTER
ABORT RESET
LIFT-OFF START
ABORT/LIFTOFF RESET
FORCE COUNT UP
RESET/START
UNIT MIN
UNIT SEC
TEN MIN
TEN SEC
CARRYOUT TO MINUTES COUNTER
INVALID LITE
LAMP DRIVER
LAMP DRIVER (TYPICAL)
LAMP TEST
LAMP FAIL
REF VOLTAGE
EVENT TIME PNL F7 (A4)
MISSION TIMER
GMT
TEST
EVENT TIME
MIN
SEC
59:59
PNL F7 (A4)
M4 (M2)
POWER SUPPLY
TO ALL MODULES
+12VDC
-12VDC
LAMP FAIL
CHOPPER POWER SUPPORT
10 SEC TD
CONTROL POWER
13VDC
FILTER
LAMP POWER
INVALID LITE
INVALID SYNC
MN A
MN B
EVENT TIMER AFT
EVENT TIMER FWD

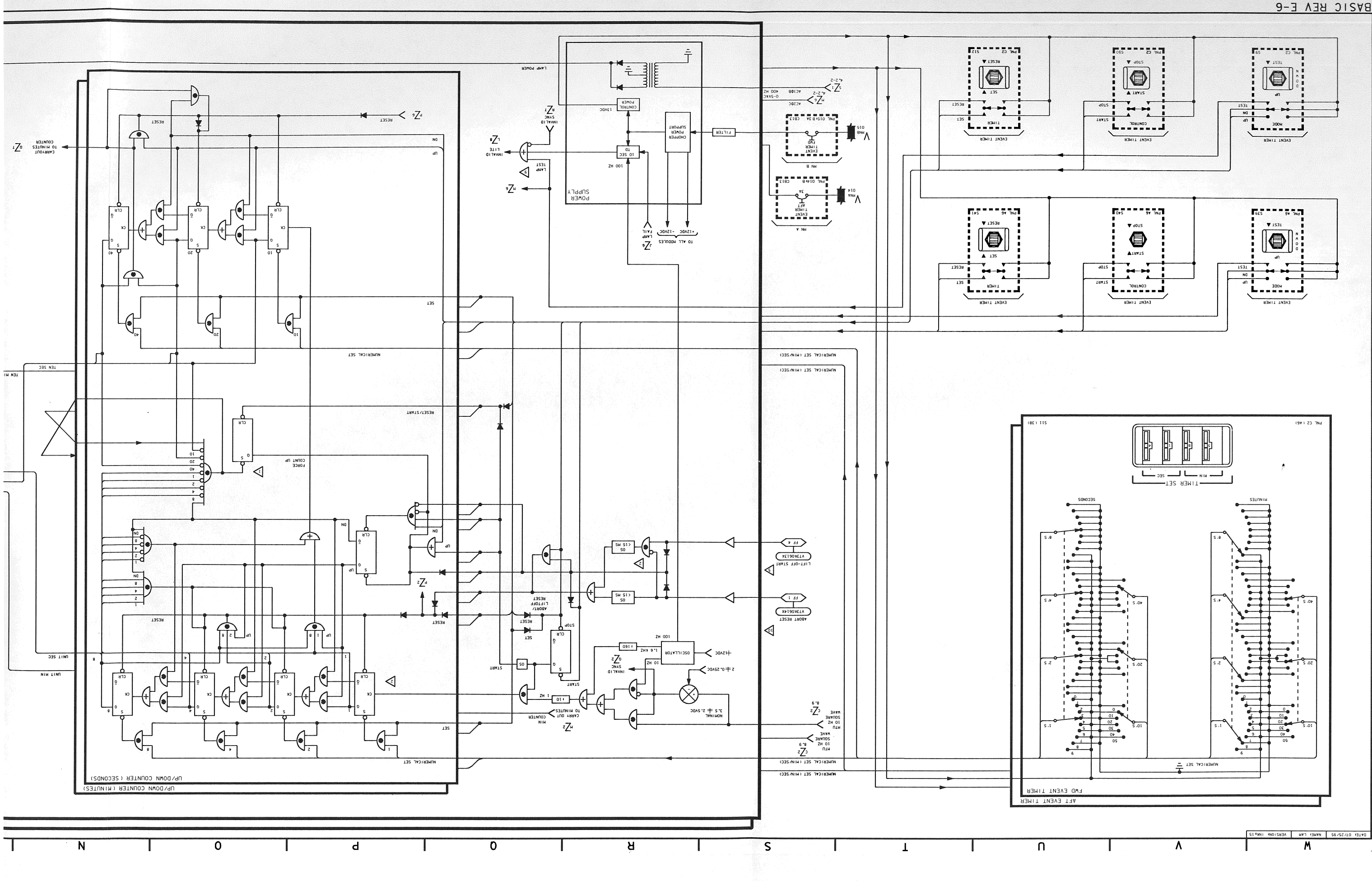

DATE: 07/25/95	NAME: LAM	VERSION: INA:15

DATE: 08/25/92 | NAME: VEM | VERSION: INK4

GENERAL PURPOSE COMPUTER
INITIAL PROGRAM LOAD
PNL 06 S42
IOP 3 IPL CMD DI 03
IOP 3 SIGNAL REFERENCE GROUND

GENERAL PURPOSE COMPUTER
MODE
IOP 3 RUN CMD DI 02
IOP 3 STBY CMD DI 01
BFC 3A 18 HALT CMD
RUN
HALT
PAUSE
STBY
PNL 06 S48

GENERAL PURPOSE COMPUTER
OUTPUT
SELECT
BACKUP
NORMAL
OFF
TERMINATE
PNL 06 S37

GENERAL PURPOSE COMPUTER
POWER
ON
OFF
PNL 06 S32

V76 X4305E OF1 N/A OLD CPU 2 RPC A EVENT 1 S/S
V76 X4355E OF1 N/A PCA DPS GPC 2 RPC A ON EVENT 1 S/S
V76 X4362E OF2 N/A PCA DPS GPC 3 RPC B ON EVENT 1 S/S
V76 X4312E OF2 N/A OLD CPU 3 RPC B EVENT 1 S/S
V76 X4313E OF3 N/A OLD CPU 3 RPC C EVENT 1 S/S
V76 X4363E OF3 N/A PCA DPS GPC 3 RPC C ON EVENT 1 S/S
V76 X4311E OF1 N/A OLD CPU 3 RPC A EVENT 1 S/S
V76 X4361E OF1 N/A PCA DPS GPC 3 RPC A ON EVENT 1 S/S
V76 ST172E OF3 N/A GPC 3 SW SCAN BUS C EVENT 1 S/S

FPCA-1 FPCA-2 FPCA-3
PWR RTN
RPC A IOP 2
RPC A CPU 2
RPC B IOP 2
RPC B CPU 3
RPC C CPU 3
RPC A IOP 3
RPC B IOP 3
RPC C IOP 3
CONTROL LOGIC
C SENSOR
CPU 3
IOP 3
BFC 3A
5A
FLCA-1 FLCA-2 FLCA-3
HYBRID DRIVER
3A
LF1
V_{MNA} FPC 1
V_{MNB} FPC 2
V_{MNC} FPC 3
$V_{ESS\ 1BC}$ FD
$V_{ESS\ 2CA}$ FD
$V_{ESS\ 3AB}$ FD
V72K7193N GPC NO 2 BUS A INHIBIT CMD
V72K7197N GPC NO 3 BUS B INHIBIT CMD
V72K7198N GPC NO 3 BUS C INHIBIT CMD
V72K7196N GPC NO 3 BUS A INHIBIT CMD

BASIC REV E-2

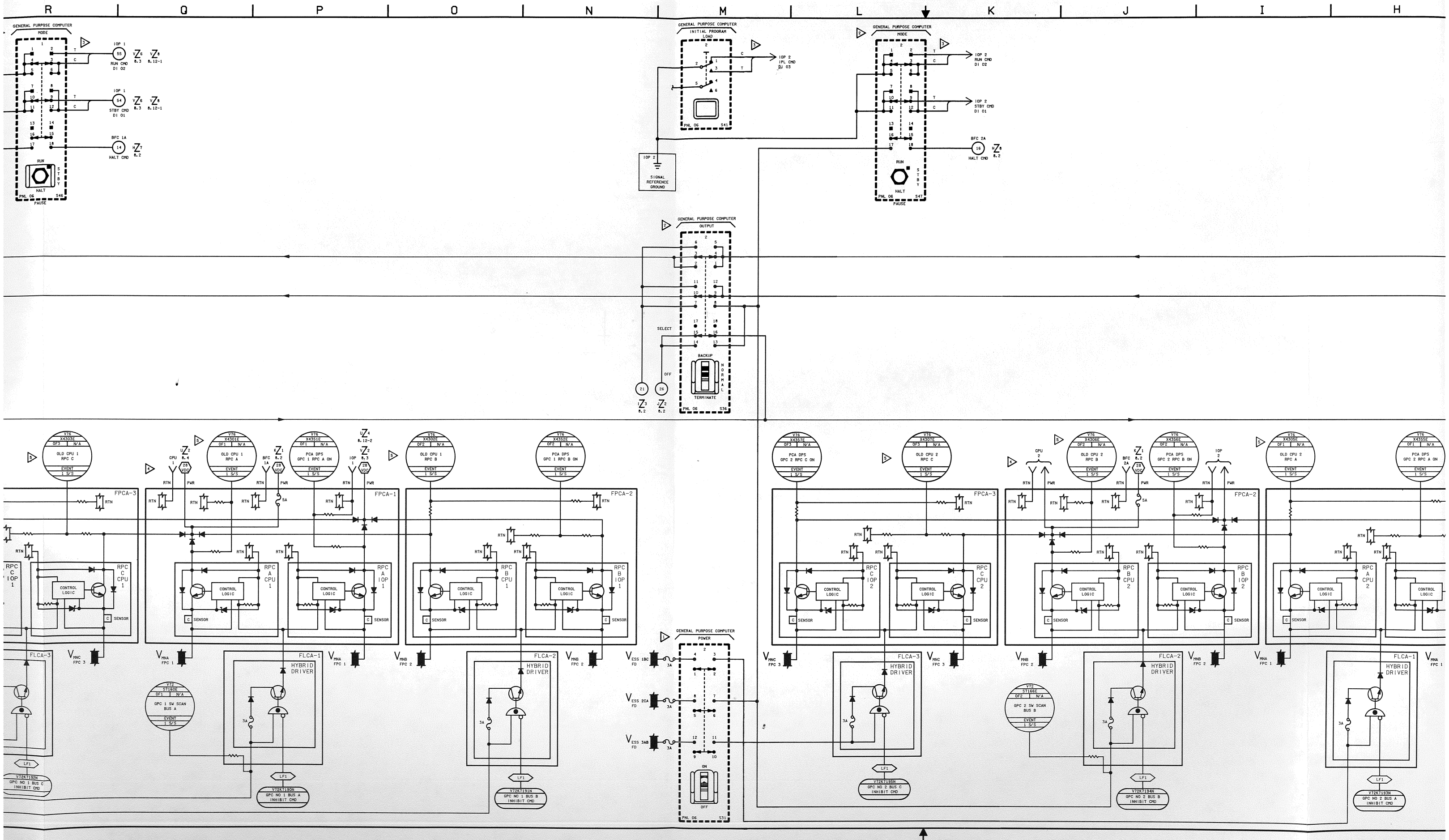
R
Q
P
O
N
M
L
K
J
I
H
GENERAL PURPOSE COMPUTER
MODE
RUN
HALT
PAUSE
STBY
IOP 1
RUN CMD
DI 02
STBY CMD
DI 01
BFC 1A
HALT CMD
GENERAL PURPOSE COMPUTER
INITIAL PROGRAM
LOAD
IOP 2
IPL CMD
DJ 03
IOP 2
SIGNAL
REFERENCE
GROUND
GENERAL PURPOSE COMPUTER
MODE
IOP 2
RUN CMD
DI 02
IOP 2
STBY CMD
DI 01
BFC 2A
HALT CMD
GENERAL PURPOSE COMPUTER
OUTPUT
SELECT
OFF
BACKUP
NORMAL
TERMINATE
GENERAL PURPOSE COMPUTER
POWER
ON
OFF
FPCA-3
FPCA-1
FPCA-2
FLCA-3
FLCA-1
FLCA-2
HYBRID
DRIVER
CONTROL
LOGIC
SENSOR
RTN
PWR
LF1
GPC 1 SW SCAN
BUS A
GPC 2 SW SCAN
BUS B
GPC NO 1 BUS C
INHIBIT CMD
GPC NO 1 BUS A
INHIBIT CMD
GPC NO 1 BUS B
INHIBIT CMD
GPC NO 2 BUS C
INHIBIT CMD
GPC NO 2 BUS B
INHIBIT CMD
GPC NO 2 BUS A
INHIBIT CMD

DATE: 08/27/92	NAME: PSD	VERSION: BPT: 6
DATE: 09/09/92	NAME: JMB	VERSION: BPT: 7
DATE: 09/25/92	NAME: VEM	VERSION: INK: 4

TOGGLE SWITCH INTERNAL ASSEMBLY DRAWINGS

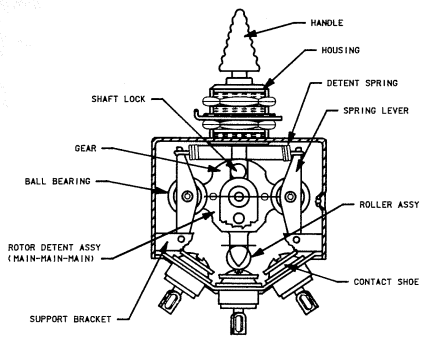

TOGGLE SWITCH ROTOR/ROLLER ASSEMBLY

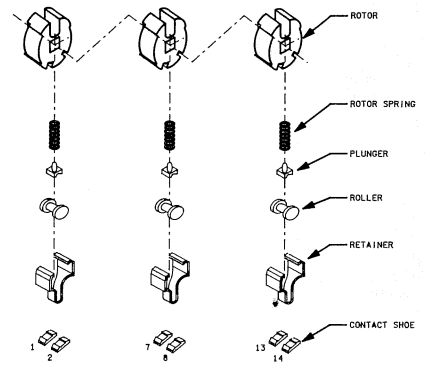

1. THE AP101S GPC'S USE THE OLD IOP POWER FEED. THE OLD CPU RPC'S ONLY SUPPLY POWER TO THE BFC
2. RTN AND PWR CAPPED OFF WITH NEW GPC'S
3. DISCRETE INPUT TRUTH TABLE:

TRUE	COMPLIMENT	OUTPUT
0	0	0
0	1	1
1	0	UNDEFINED
1	1	0

4. 3 POLE, TOGGLE SWITCH, 18 CONTACT POSITIONS

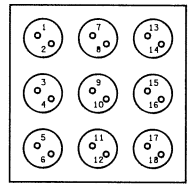

NOTES: 1. 3 POLE, TOGGLE SWITCH, 12 CONTACT POSITIONS

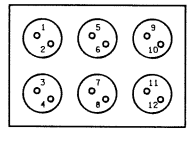

11 SW 1

NATIONAL AERONAUTICS AND SPACE ADMINISTRATION LYNDON B. JOHNSON SPACE CENTER HOUSTON, TEXAS		SIGNATURE	DATE
		DSGN THERESA M WISONG	3/27/87
PANEL 06 GPC SWITCHES		DR	
		ENGR ROBERT J. WALTON	8/24/90
		ENGR Richard Lehrke	10/4/92
		APP M. D. Cinnamon	10/4/92
DWG NO 8.11	SPACE SHUTTLE	APP	
	ALL	OMNIPLAN S.C. Kimbrell	10-13-92
SHEET 1 OF 2 PAGE	121 X 34	LTR E PCN 2	

BASIC REV E-2

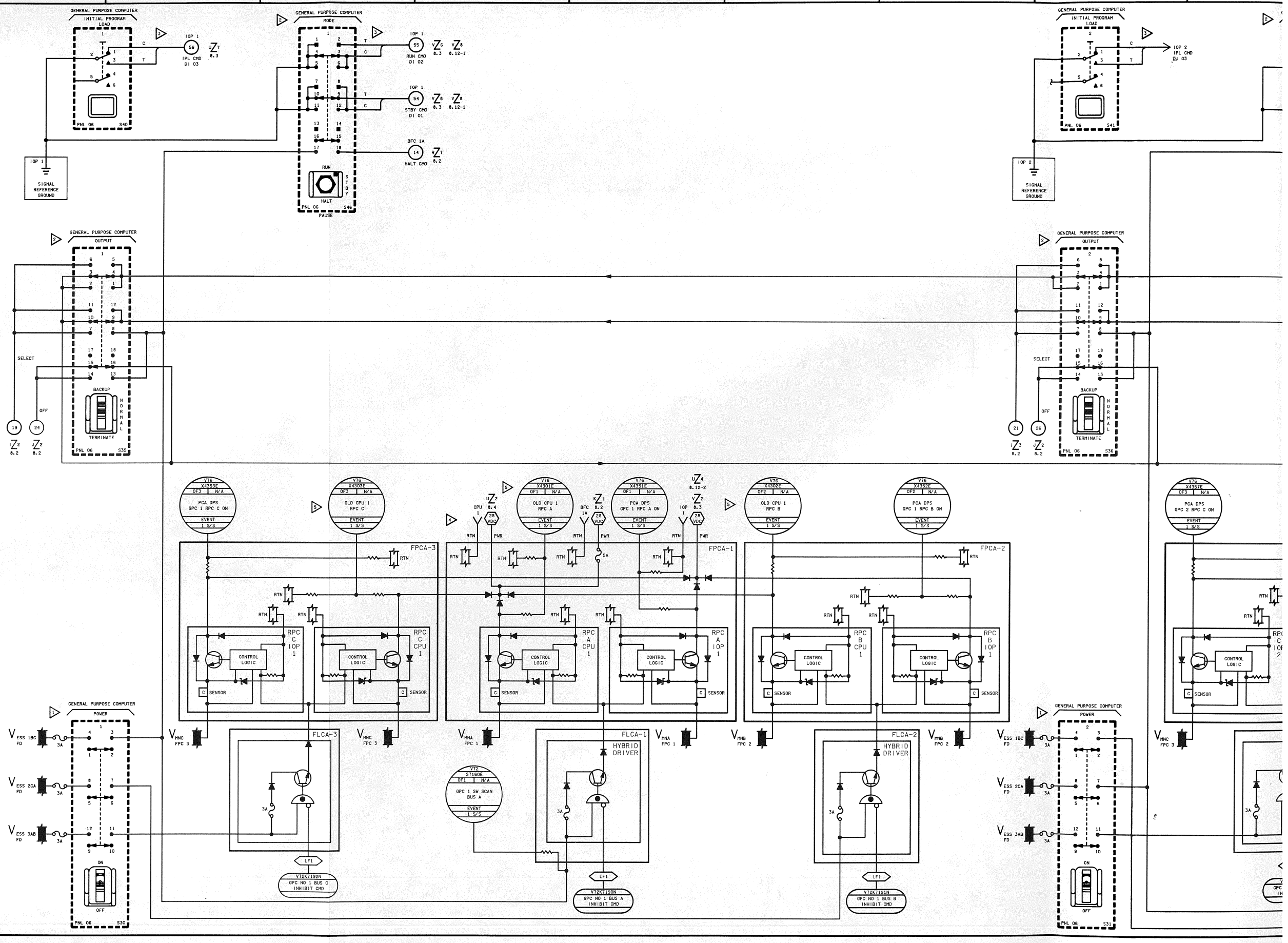

DATE: 08/28/92	NAME: VEM	VERSION: BPT:5
DATE: 09/09/92	NAME: JDF	VERSION: BPT:6
DATE: 09/25/92	NAME: VEM	VERSION: INK:4

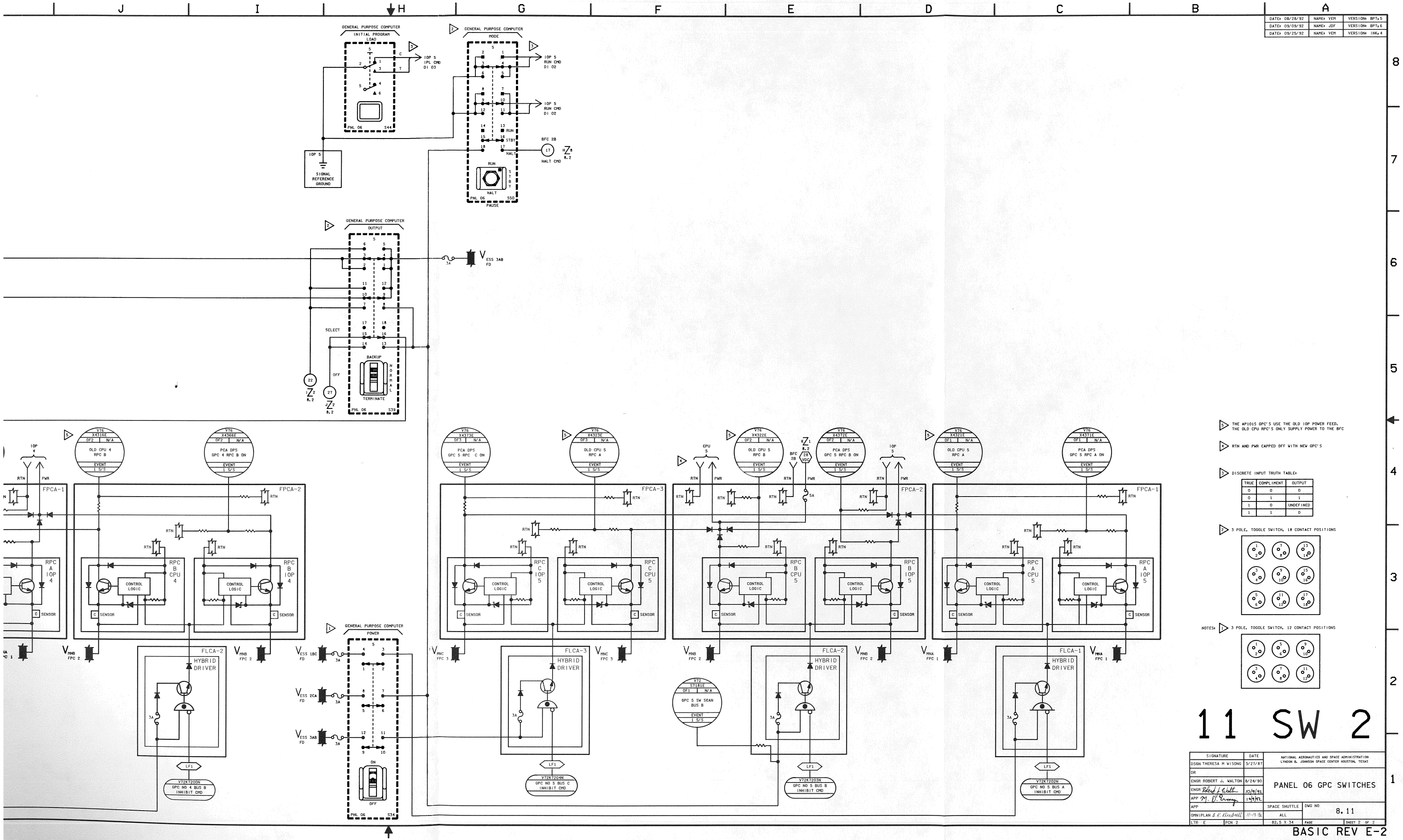

5 THE AP101S GPC'S USE THE OLD IOP POWER FEED. THE OLD CPU RPC'S ONLY SUPPLY POWER TO THE BFC

4 RTN AND PWR CAPPED OFF WITH NEW GPC'S

3 DISCRETE INPUT TRUTH TABLE:

TRUE	COMPLIMENT	OUTPUT
0	0	0
0	1	1
1	0	UNDEFINED
1	1	0

2 3 POLE, TOGGLE SWITCH, 18 CONTACT POSITIONS

NOTES: 1 3 POLE, TOGGLE SWITCH, 12 CONTACT POSITIONS

11 SW 2

SIGNATURE	DATE	NATIONAL AERONAUTICS AND SPACE ADMINISTRATION LYNDON B. JOHNSON SPACE CENTER HOUSTON, TEXAS
DSGN THERESA M WISONG	3/27/87	
DR		PANEL 06 GPC SWITCHES
ENGR ROBERT J. WALTON	8/24/90	
ENGR Robert J. Walton	10/9/92	
APP M. D. Ermy	10/9/92	
APP		SPACE SHUTTLE ALL — DWG NO 8.11
OMNIPLAN S. K. Kimbrill	10-13-92	
LTR E — PCN 2		82.5 X 34 — PAGE — SHEET 2 OF 2

BASIC REV E-2

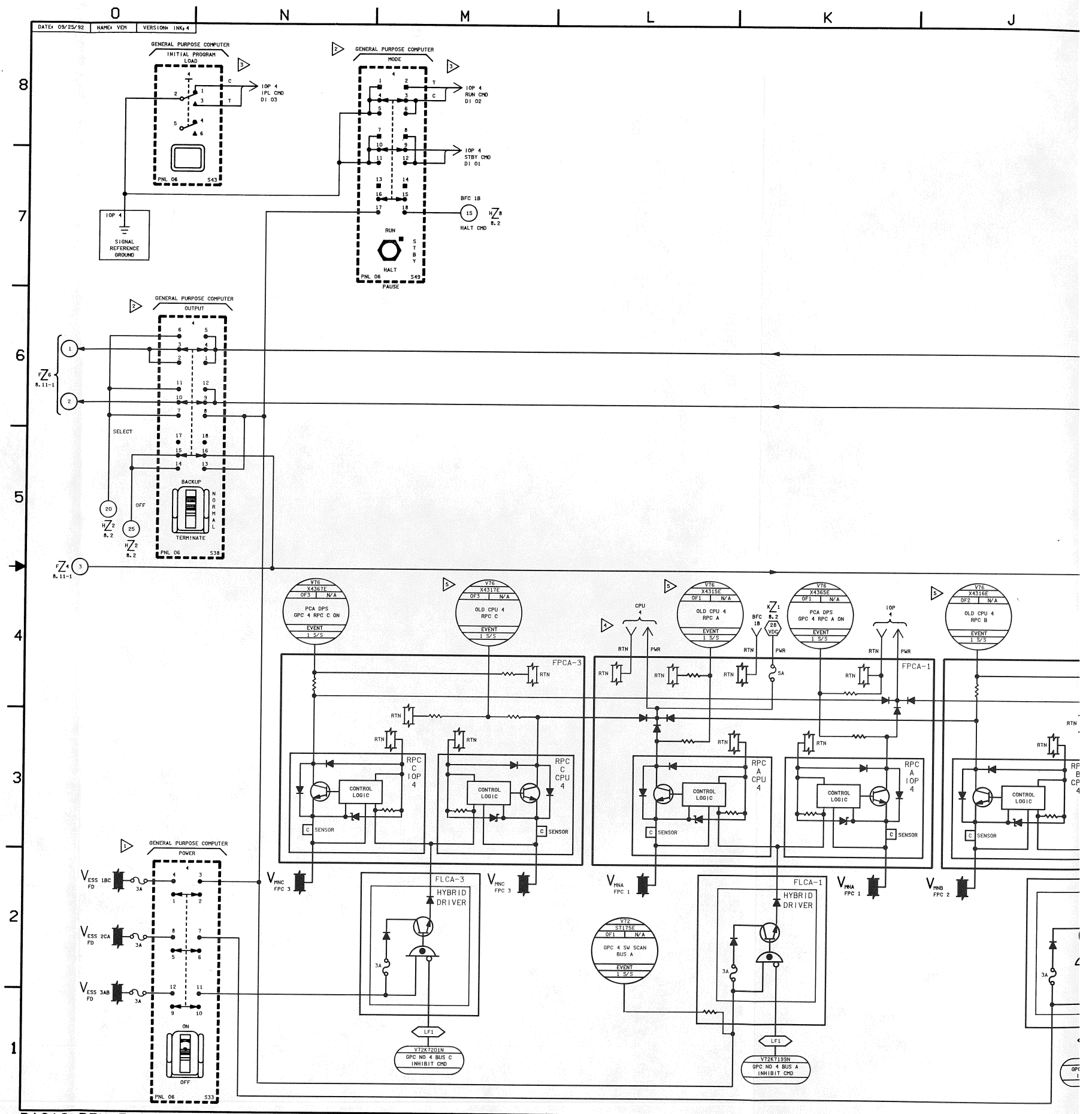
DATE: 09/25/92
NAME: VEM
VERSION: INK: 4
GENERAL PURPOSE COMPUTER
INITIAL PROGRAM LOAD
IOP 4 IPL CMD DI 03
PNL 06
S43
IOP 4
SIGNAL REFERENCE GROUND
GENERAL PURPOSE COMPUTER
MODE
IOP 4 RUN CMD DI 02
IOP 4 STBY CMD DI 01
BFC 1B
HALT CMD
RUN
HALT
PAUSE
S49
GENERAL PURPOSE COMPUTER
OUTPUT
SELECT
OFF
BACKUP
NORMAL
TERMINATE
S38
GENERAL PURPOSE COMPUTER
POWER
ON
OFF
S33
PCA DPS GPC 4 RPC C ON
OLD CPU 4 RPC C
OLD CPU 4 RPC A
PCA DPS GPC 4 RPC A ON
OLD CPU 4 RPC B
FPCA-3
FPCA-1
RPC C IOP 4
RPC C CPU 4
RPC A CPU 4
RPC A IOP 4
CONTROL LOGIC
SENSOR
FLCA-3
FLCA-1
HYBRID DRIVER
GPC 4 SW SCAN BUS A
GPC NO 4 BUS C INHIBIT CMD
GPC NO 4 BUS A INHIBIT CMD

BASIC REV E-2

DATE: 07/15/94	NAME: JMB	VERSION: INR: 8
DATE: 08/11/95	NAME: SEV	VERSION: BPT: 3
DATE: 05/10/96	NAME: MDU	VERSION: INR: 9

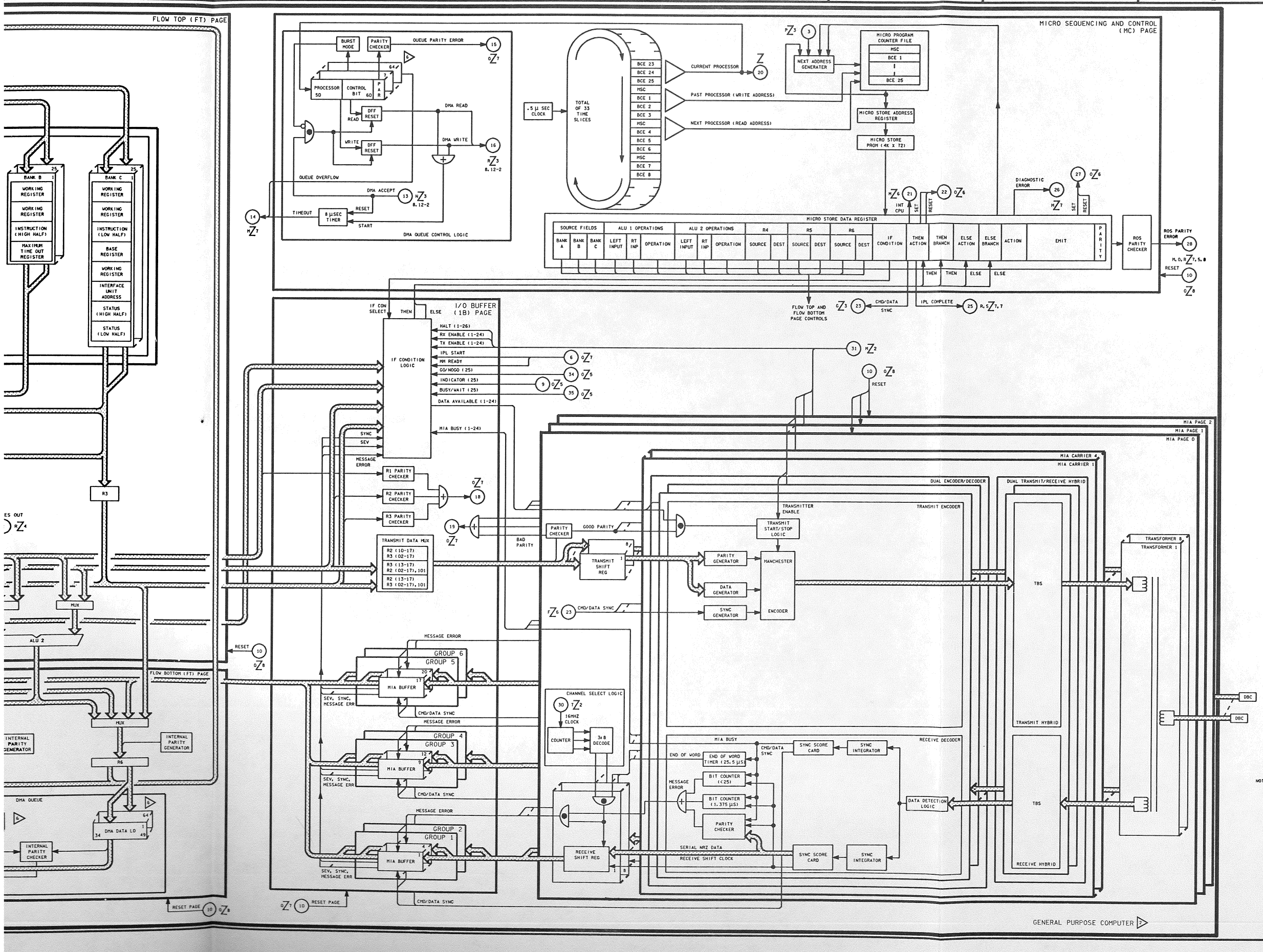

(15) THE S-R FLIP FLOP TRUTH TABLE IS AS FOLLOWS

S	R	Q
0	0	NO CHANGE
1	0	1
0	1	0
1	1	INDETERMINANT

(16) THE +5VDC MEM POWERS THE HALT DISCRETE AND THE SLEEP MODE LATCH SO THAT THEY REMAIN POWERED WHETHER THE GPC IS IN SLEEP MODE OR FULLY OPERATIONAL

(17) THE OUTPUTS OF THE LOGIC REFLECT ITS INPUTS. HOWEVER, THE OUTPUTS DO NOT CHANGE STATES UNLESS AT LEAST ONE INPUT TRANSITIONS FROM A '0' TO A '1'. AN INPUT TRANSITION FROM '1' TO '0' DOES NOT CAUSE A CHANGE IN THE OUTPUTS

(18) BCE MICRO PROGRAM CHECKS R2 BIT 0 PRIOR TO ALLOWING DATA TRANSMISSION TO THE MIA. IF IT IS A '0' THE DATA IS GATED TO THE MIA. IF IT IS '1' NO TRANSMISSION TAKES PLACE

(19) THE TEST FAIL VOTE 'REGISTER IS LOADED VIA THE PCO COMMAND 'LOAD TEST REGISTER', USING THIS COMMAND IT IS POSSIBLE FOR SOFTWARE TO SET THE HARDWARE 1-FAIL LIGHT

(20) POWER SUPPLY SLEEP MODE IS ENTERED APPROXIMATELY 4.5 MINUTES AFTER THE GPC IS HALTED AND NEITHER MMU IS SELECTED FOR IPL. POWER REQUIREMENTS DROP FROM 550 WATTS TO 50 WATTS WHEN SLEEP MODE IS ENTERED

(21) FOR INPUT ORIGINATION AND OUTPUT DESTINATION ASSIGNMENTS, SEE DRAWING 8.1

(22) ID SOURCE (DO 35) 5VDC IS STRAPPED BACK INTO STATION ID BITS 0, 1 AND 2 (DI 32,33,34) TO ESTABLISH THE GPC STATION ID'S. SEE DRAWING 8.1 NOTE 3

(23) ANY TWO FAIL VOTES INPUT TO THIS LOGIC WILL GENERATE A SIGNAL THAT SETS THE FAIL LATCH

(24) LEVEL B INTERRUPT REGISTER BITS 1-3 (DECODE 0, 1, 2) ARE DECODED BELOW

BIT 1	BIT 2	BIT 3	ERROR CONDITION
0	0	0	NO ERROR
0	0	1	DEVICE OUT DATA ERROR
0	1	0	R1, R2, R3 PARITY ERROR
0	1	1	DMA ADDRESS/DATA PARITY ERROR
1	0	0	QUEUE CONTROL PARITY ERROR
1	0	1	MIA PARITY ERROR
1	1	0	BCE 25 ERROR
1	1	1	UNDEFINED

(25) DMA QUEUE IS CONTAINED ON TWO PAGES: FLOW BOTTOM PAGES HAS BITS 0-49. THE MICRO SEQUENCING AND CONTROL PAGE HAS BITS 50-61. PARITY IS CHECKED INDEPENDENTLY ON EACH PAGE. SEE PATTERN 011 AND 100 IN NOTE 9

(26) 'OVER TEMP' 'CHARGER STAT' AND 'BATTERY STAT' ARE READ BY PCI INSTRUCTION AT 1.04 HZ. THEY DO NOT GENERATE A LEVEL E INTERRUPT

(27) MSC STATUS REGISTER

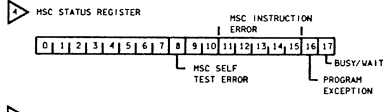

(28) BCE STATUS REGISTER (HI AND LO)

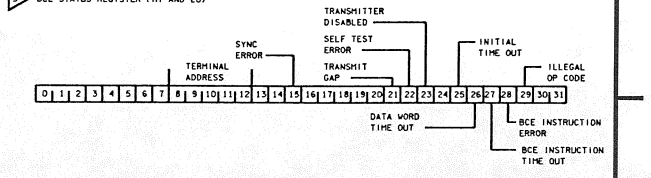

(29) 1 OF 5. THE INTERFACES SHOWN REPRESENT GPC-1. GPC'S 2-5 ARE SIMILAR. FOR DETAILS SEE DRAWING 8.11

NOTES: FOR DETAILS OF DISCRETE INPUT AND OUTPUT CIRCUITS SEE ROCKWELL DRAWING VSTO-720229, ZONE C24

12 GPC 1

SIGNATURE		DATE	
DSGN V. ORTIZ		6/24/86	NATIONAL AERONAUTICS AND SPACE ADMINISTRATION LYNDON B. JOHNSON SPACE CENTER HOUSTON, TEXAS
DR			
ENGR M. BODEAU			GENERAL PURPOSE COMPUTER (I/O FUNCTIONS)
ENGR		5/16/96	
APP		5-16-96	
APP		5-16-96	SPACE SHUTTLE / DWG NO 8.12
CADS		6-17-96	ALL
LTR E	PCN 6		126.5 X 34 / PAGE / SHEET 1 OF 2

BASIC REV E-6

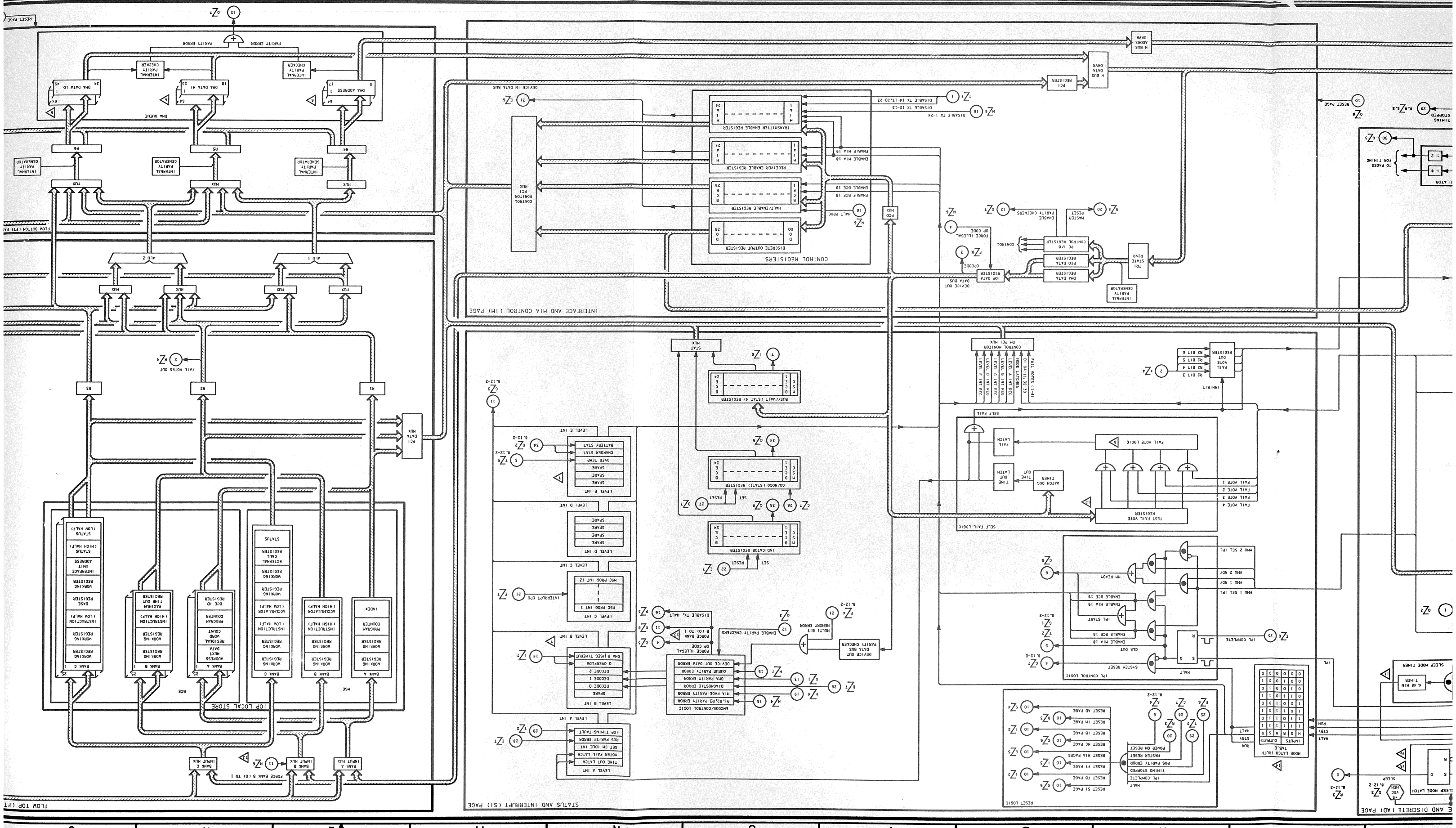
FLOW TOP (FT)
FLOW BOTTOM (FT) PAGE
IOP LOCAL STORE
BANK A
BANK B
BANK C
BCE
MSC
INPUT MUX
FORCE BANK B (0) TO 1
PARITY ERROR
INTERNAL PARITY CHECKER
DMA QUEUE
DMA ADDRESS
DMA DATA MI
DMA DATA LO
INTERNAL PARITY GENERATOR
MUX
ALU 1
ALU 2
R1
R2
R3
R4
R5
R6
FAIL VOTES OUT
PCI DATA MUX
INTERFACE AND MIA CONTROL (IM) PAGE
CONTROL REGISTERS
CONTROL MONITOR PCI MUX
DISCRETE OUTPUT REGISTER
HALT/ENABLE REGISTER
RECEIVER ENABLE REGISTER
TRANSMITTER ENABLE REGISTER
DEVICE IN DATA BUS
DISABLE TX 1-24
DISABLE TX 10-13
DISABLE TX 14-17,20-23
ENABLE MIA 19
ENABLE MIA 18
ENABLE BCE 19
ENABLE BCE 18
HALT PROC
PCO MUX
PCI REGISTER
M BUS DATA DRVR
M BUS ADDRS DRVR
IOP DATA REGISTER
DEVICE OUT DATA BUS
FORCE ILLEGAL OP CODE
OPCODE
PC I/O CONTROL REGISTER
PCO DATA REGISTER
DMA DATA REGISTER
CONTROL
MASTER RESET
ENABLE PARITY CHECKERS
INTERNAL GENERATOR
RTI STATE RCVR
STATUS REGISTER
BUSY/WAIT (STAT 4) REGISTER
GO/MOOD (STAT1) REGISTER
INDICATOR REGISTER
SET
RESET
STAT MUX
LEVEL E INT
LEVEL D INT
LEVEL C INT
LEVEL B INT
LEVEL A INT
BATTERY STAT
CHARGER STAT
OVER TEMP
SPARE
MSC PROC INT 12
MSC PROC INT 1
INTERRUPT CPU
DMA B ILLEC TIMEOUT
O OVERFLOW
DECODE 2
DECODE 1
DECODE 0
IOP TIMING FAULT
TIME OUT LATCH
VOTER FAIL LATCH
BOS PARITY ERROR
SET CH IDLE INT
STATUS AND INTERRUPT (S1) PAGE
DISABLE TX, HALT
FORCE BANK B (0) TO 1
FORCE ILLEGAL OP CODE
ENABLE PARITY CHECKERS
MULTI BIT MEMORY ERROR
DEVICE OUT DATA BUS
PARITY CHECKER
ENCODE/CONTROL LOGIC
DEVICE OUT DATA ERROR
QUEUE PARITY ERROR
DMA PARITY ERROR
DIAGNOSTIC ERROR
MIA PAGE PARITY ERROR
R1,R2,R3 PARITY ERROR
CONTROL MONITOR PCI MUX
FAIL VOTES (11-4)
SELF FAIL
SELF FAIL LOGIC
FAIL VOTE LOGIC
TEST FAIL VOTE REGISTER
WATCH DOG TIMER OUT LATCH
FAIL LATCH
FAIL VOTE 1
FAIL VOTE 2
FAIL VOTE 3
FAIL VOTE 4
INHIBIT
R2 BIT 3
R2 BIT 4
R2 BIT 5
R2 BIT 6
FAIL VOTE OUT REGISTER
RESET LOGIC
RESET SI PAGE
RESET FB PAGE
RESET FT PAGE
RESET MC PAGE
RESET MIA PAGES
RESET IB PAGE
RESET IM PAGE
RESET AD PAGE
POWER ON RESET
MASTER RESET
IPL COMPLETE
TIMING STOPPED
BOS PARITY ERROR
HALT
IPL CONTROL LOGIC
SYSTEM RESET
IPL START
CLK OUT
ENABLE MIA 19
ENABLE MIA 18
ENABLE BCE 19
ENABLE BCE 18
PROM READ
PROM 2 SEL IPL
PROM 2 ROT
PROM 1 ROT
PROM 1 SEL IPL
MODE LATCH TRUTH TABLE
INPUTS
OUTPUTS
SLEEP MODE LATCH
SLEEP MODE TIMER
4.48 MIN
SLEEP
VOC +5
TIMING STOPPED
10 PAGES FOR TIMING
H BUS ADDRS DRVR
H BUS DATA DRVR
PCI REGISTER
RESET PAGE
INTERFACE AND DISCRETE (AD) PAGE

DATE= 05/10/96 | NAME= MDU | VERSION= INK=9

W V U T S R Q P O N

8 7 6 5 4 3 2 1

AGE AND DISCRETE (AD) PAGE

STATUS AND I

INTERFACE AND MIA

SLEEP MODE DISCRETE INPUTS
00 HALT
01 SPARE
02 SPARE
03 SPARE

SLEEP MODE LATCH

+5 VDC MEM

SLEEP

DISCRETE INPUTS - NON RM
00 HALT
01 STBY
02 RUN
03 IPL CMD

04 MMU SEL IPL
05 MMU SEL IPL
06 MMU 1 RDY
07 MMU 2 RDY

4.48 MIN TIMER

SLEEP MODE TIMER

08 GPC X BFS RUN
09 GPC X BFS RUN
10 GPC X BFS RUN
11 GPC X BFS RUN

12 SPARE (I/O TERM A)
13 I/O TERM B
14 SPARE
15 HISAM DUMP

DISABLE TX 10-13

DISABLE TX 14-17, 20-23

16-19 SPARE

20 GPC X STBY
21 GPC X STBY
22 GPC X STBY
23 GPC X STBY

24 GPC X RUN
25 GPC X RUN
26 GPC X RUN
27 GPC X RUN

28 GPC X SYNC
29 GPC X SYNC
30 GPC X SYNC
31 GPC X SYNC

32 ID BIT 0
33 ID BIT 1
34 ID BIT 2
35 BFS ENGAGE 1

36 BFS ENGAGE 2
37 BFS ENGAGE 3
38 CRT SEL A
39 CRT SEL B

DISCRETE INPUTS - RM
40 FAIL VOTE 1
41 FAIL VOTE 2
42 FAIL VOTE 3
43 FAIL VOTE 4

DISCRETE OUTPUTS - RM
00 GPC 1 FAIL
07 GPC 2 FAIL
08 GPC 3 FAIL
09 GPC 4 FAIL
10 GPC 5 FAIL

SELF FAIL
FAIL VOTE 1
FAIL VOTE 2
FAIL VOTE 3
FAIL VOTE 4

DISCRETE OUTPUTS - NON RM
00-06 SPARE
07 I/O ACTIVE TB
08 SPARE
09 GPC READY TB
10 SPARE
11 SPARE
12 SPARE (MMU RESET)
13 SPARE (MMU RESET)
14-19 SPARE
20 GPC SELF SYNC 1
21 SPARE
22 BFS RUN
23 SPARE
24 GPC SELF SYNC 2
25-27 SPARE
28 GPC SELF SYNC 3
29 SPARE
30 GPC ID
31 IPL IN PROGRESS

IOP OSCILLATOR
32 MHZ OSC
÷ 8
÷ 2
TO PAGES FOR TIMING

"1"

RESET PAGE

TIMING STOPPED

RESET PAGE

MODE LATCH TRUTH TABLE

INPUTS			OUTPUTS		
H	S	R	H	S	R
1	1	1	1	1	1
1	1	0	1	1	0
1	0	1	1	0	1
1	0	0	1	0	0
0	1	1	0	1	1
0	1	0	0	1	0
0	0	1	0	0	1
0	0	0	0	0	0

HALT
STBY
RUN
IPL

RESET LOGIC
HALT
IPL COMPLETE
TIMING STOPPED
ROS PARITY ERROR
MASTER RESET
POWER ON RESET

RESET SI PAGE
RESET FB PAGE
RESET FT PAGE
RESET MIA PAGES
RESET MC PAGE
RESET IB PAGE
RESET IM PAGE
RESET AD PAGE

IPL CONTROL LOGIC
HALT
IPL COMPLETE
SYSTEM RESET
GLK OUT
ENABLE MIA 18
ENABLE BCE 18
IPL START
ENABLE MIA 19
ENABLE BCE 19
MM READY
MMU 1 SEL IPL
MMU 1 RDY
MMU 2 RDY
MMU 2 SEL IPL

SELF FAIL LOGIC
TEST FAIL VOTE REGISTER
FAIL VOTE 4
FAIL VOTE 3
FAIL VOTE 2
FAIL VOTE 1
WATCH DOG TIMER
TIME OUT
TIME OUT LATCH
FAIL VOTE LOGIC
FAIL LATCH
SELF FAIL

INHIBIT
FAIL VOTE OUT REGISTER
R2 BIT 3
R2 BIT 4
R2 BIT 5
R2 BIT 6

FAIL VOTES 1-24
PCI QUALIFIERS
MODE LATCHES
LEVEL A INT REG
LEVEL B INT REG
LEVEL C INT REG
LEVEL D INT REG
LEVEL E INT REG
CONTROL MONITOR RM PCI MUX

LEVEL A INT
TIME OUT LATCH
VOTER FAIL LATCH
SET CH IDLE INT
ROS PARITY ERROR
IOP TIMING FAULT

LEVEL B INT
SPARE
DECODE 0
DECODE 1
DECODE 2
O OVERFLOW
DMA 8 µSEC TIMEOUT

LEVEL C INT
MSC PROG INT 1
MSC PROG INT 12

LEVEL D INT
SPARE
SPARE
SPARE
SPARE

LEVEL E INT
SPARE
SPARE
SPARE
OVER TEMP
CHARGER STAT
BATTERY STAT

ENCODE/CONTROL LOGIC
R1, R2, R3 PARITY ERROR
MIA PAGE PARITY ERROR
DIAGNOSTIC ERROR
DMA PARITY ERROR
QUEUE PARITY ERROR
DEVICE OUT DATA ERROR

DEVICE OUT DATA BUS PARITY CHECKER

MULTI BIT MEMORY ERROR

ENABLE PARITY CHECKERS

FORCE ILLEGAL OP CODE

FORCE BANK B (0) TO 1

DISABLE TX, HALT

INDICATOR REGISTER
GO/WOGO (STAT1) REGISTER
BUSY/WAIT (STAT 4) REGISTER
STAT MUX

INTERNAL PARITY GENERATOR
TRI STATE RCVR
DMA DATA REGISTER
PCO DATA REGISTER
PC I/O CONTROL REGISTER
CONTROL
IOP DATA REGISTER
DEVICE OUT DATA BUS
OPCODE
FORCE ILLEGAL OP CODE
MASTER RESET
ENABLE PARITY CHECKERS

CONTROL REGISTERS
DISCRETE OUTPUT REGISTER
HALT PROC
HALT/ENABLE REGISTER
ENABLE BCE 18
ENABLE BCE 19
RECEIVER ENABLE REGISTER
ENABLE MIA 18
ENABLE MIA 19
TRANSMITTER ENABLE REGISTER
DISABLE TX 1-24
DISABLE TX 10-13
DISABLE TX 14-17, 20-23

PCO MUX

H BUS DATA DRVR
PCI REGISTER
H BUS ADDRS DRVR

K-BUS (DATA)
K-BUS (ADDRESS)

BASIC REV E-6

DATE: 07/16/91	NAME: MDU	VERSION: INK: 5
DATE: 08/26/91	NAME: MFB	VERSION: INK: 6
DATE: 09/30/91	NAME: MFB	VERSION: INK: 7

GENERAL PURPOSE COMPUTER

INSTRUCTION UNIT (IU)

EFFECTIVE ADDRESS UNIT (EA)

CENTRAL PROCESSING UNIT (CPU)

EXECUTION UNIT (EU)

INTERRUPT PAGE (IP)

CAPTURE REGISTER

POWER DOWN
POWER ON RESET
SYSTEM RESET
SPARE
CPU MICRO STORE PARITY FAULT
INTERRUPT PAGE PARITY ERROR
MEMORY PARITY /EDC
SPARE
INT DETECTED

SPARE
SPARE
ENDOP TIME OUT
SPARE
CPU CANNOT CONTINUE
RESTART PIPELINE
AGE MACRO STOP
CPU BREAK POINT
INT DETECTED

SPARE
SPARE
SPARE
SPARE
FIXED PT OVERFLOW
FLT PT OVERFLOW
SPARE
FLT PT UNDERFLOW
INT DETECTED

SPARE
ILLEGAL ADDRESS
SPARE
STORE PROTECT VIOLATION
BAD I/O COMMAND
DMA PARITY ERROR
IU MEMORY ERROR
EU MEMORY ERROR
INT DETECTED

SPARE
SPARE
SPARE
SPARE
SPARE
INTERVAL COUNTER A
INTERVAL COUNTER B
SPARE
INT DETECTED

IOP LEVEL A
IOP LEVEL B
IOP LEVEL C
IOP LEVEL D
IOP LEVEL E
SPARE
SPARE
SPARE
INT DETECTED

200µ SEC ENDOP TIMER

ENDOP RESET

H-BUS RCVR

DATA IN REGISTER

COMMAND PLA

PARITY CHECKER

PARITY ERROR

TRANSLATOR MUX

I-BUS MUX

I-BUS

C-BUS

LOCAL STORE MUX

PRIORITY PLA

PARITY CHECKER

PARITY ERROR

LOCAL STORE

BANK A (16 X 4)

BANK B (16 X 4)

MUX

MUX

ALU A

ALU B

OUTPUT LATCH

CPU INBUS DRVR

BRANCH ADDRESS MUX

INTERRUPT DETECTED

SEQUENCER

SEQUENCER INSTR

BRANCH COND SEL

NEXT ADDRESS

CONTROL STORE PROM

CONTROL STORE DATA REGISTER

SEQUENCER INSTRUCTION	SEQUENCER DESTINATION CONTROL	SHIFT —— CARRY	ALU SOURCE	ALU FUNCTION	INPUT MUX SELECT	B-FILE ADDRESS	A-FILE ADDRESS	CNTL GRP SEL	CNTL FUNC SEL	CYCLE TYPE	P A R

LITERAL FIELD | B-FILE ADDRESS

SEQUENCER DESTINATION CONTROL | I-BUS DEST

BRANCH MUX SELECT	BR CND SNS	BRANCH CONDITION SELECT	NEXT ADDRESS BASE	COMMAND VECTOR

NEXT ADDRESS BASE | PRIORITY VECTOR

NEXT ADDRESS

SEQUENCER INSTRUCTION	BRANCH MUX SELECT	BR CND SNS	BRANCH CONDITION SELECT	NEXT ADDRESS BASE	I-BUS BITS	CNTL GRP SEL	CNTL FUNC SEL	CYCLE TYPE	P A R

PARITY ERROR

PARITY CHECKER

WAIT

FORCE ZERO

INSTRUCTION DECODE LOGIC

ADDRESS TYPE DECODE PLA

INSTR TYPE DECODE PLA

EFFECTIVE ADDRESS SEQUENCER

EA READ REQ

EFFECTIVE ADDRESS DATA FLOW CONTROL

CONTROLS

ALIGNMENT MUX

BRANCH TAKEN

CONFLICT DETECTION LOGIC

CONFLICT DETECTED/RESTART PIPELINE

EXECUTION UNIT OPERATION FILE

ADDR DRVR

H-BUS DATA RCVR

EFFECTIVE ADDR PROG CNTR

EFFECTIVE ADDR A MUX

EFFECTIVE ADDR B MUX

EFFECTIVE ADDR ALU

EFFECTIVE ADDRESS A REG

MEMORY OPERAND FILE

INTERNAL OPERAND FILE

OPCODE ADDRESS

RIGHT LOCAL STORE MUX

LEFT LOCAL STORE MUX

RIGHT LOCAL STORE

LEFT LOCAL STORE

CPU SECTOR

CONSTANT SECTOR

GROUP 16

GROUP 1

REG 1

REG 16

FRACTION A REGISTER

FRACTION AI MUX

FRACTION BI MUX

FRACTION ALU

Y-MUX

Y-BUS DRVR

FRACTION D REGISTER

INTERNAL OUTBUS DRVR

FRACTION B REGISTER

FRACTION C REGISTER

EXECUTION UNIT PROGRAM CNTR

ADDR DRVR

H-BUS DATA DRVR

CPU MICRO CONTROL LOGIC

CONTROL STORE DATA REGISTER

STORE ADDRESS CONTROLS	EXP PROM ADDR	LINE DRIVER	CONDITIONAL CONTROL	SCAN CONTROL	TYPE	STATUS	MISCELLANEOUS FIELD EMIT FIELD	NEXT ROS ADDRESS	ROS BRANCH TYPE	ROS BRANCH SPECIFICATION	TIMING SPEED	PARITY

PARITY CHECKER

ROS PARITY ERROR

FLT PT UNDERFLOW

FLT PT OVERFLOW

FIXED PT OVERFLOW

CPU CANNOT CONTINUE

CONTROL STORE ADDRESSING

NEXT ROS ADDRESS

FORCE ZERO

WAIT

ROSAR

GLKOUT

CONTROL STORE PROM

CONTROL REGISTER CONTROL (24 X 32 EXPANSION PROM)

ADDR REGISTER	A REGISTER	LOCAL STORE WRITE CONTROL	LOCAL STORE MUX MODE	D REGISTER	CONST SECTOR REG	CPU SECTOR REG

EXPONENT FLOW CONTROL (24 X 32 EXPANSION PROM)

AB MUX SEL	ALU CONTROL	AI MUX SEL	BI MUX SEL	A REG	B REG	I REG	STYPE SHIFT	MODEL	AB MUX SEL	AI CNTL	BI CNTL	EXPONENT EMIT

▷ CHARGER STATUS AND BATTERY STATUS ARE NORMALLY ZERO. A CHARGE STATUS OF '1' INDICATES AN OPEN CIRCUIT SOMEWHERE IN THE CHARGING CIRCUIT. A BATTERY STATUS OF '1' INDICATES A SHORT CIRCUIT SOMEWHERE IN THE CHARGING CIRCUIT. THIS CIRCUIT IS DESIGNED TO DETECT BATTERY CELL FAILURES (OPEN OR SHORT)

▷ THE BBU LOW VOLTAGE SWITCH PREVENTS DAMAGE TO THE NICAD CELLS BY NOT ALLOWING DEEP DISCHARGE

▷ DELETED

▷ 1 OF 5. THE INTERFACES SHOWN REPRESENT GPC1. GPC'S 2-5 ARE SIMILAR. FOR DETAILS SEE DRAWING 8.11

▷ OVER TEMPERATURE SENSOR OUTPUT=1 WHEN TEMPERATURE >190° F

▷ EVERY 12.8 MICROSECONDS A SCRUB REQUEST IS GENERATED. WHEN SCRUB ENABLE IS RETURNED BY THE H-BUS ARBITER THE ERROR DETECTION AND CORRECTION (EDAC) CIRCUITS CHECK THE LOCATION IN MEMORY FOR ERRORS. IF A SINGLE BIT ERROR IS FOUND IT IS CORRECTED AND A SOFT ERROR IS LOGGED. IF MORE THAN ONE BIT IS IN ERROR NO ATTEMPT TO CORRECT THE ERROR IS MADE. A MULTIBIT ERROR WILL REMAIN HIDDEN UNTIL THAT LOCATION IS ACCESSED

▷ THE H-BUS ARBITER CONTROLS ALL H-BUS ACTIVITY. IT USES THE PRIORITIES SHOWN TO DETERMINE WHICH UNIT HAS ACCESS TO THE BUS

▷ PROGRAM COUNTER 1 IS COMPOSED OF INTERVAL COUNTER A AND MAIN STORE LOCATION $00B0_{16}$. PROGRAM COUNTER 2 IS COMPOSED OF INTERVAL COUNTER 2 AND MAIN STORE LOCATION $00B1_{16}$. INTERVAL COUNTERS A AND B ARE 16 BIT INCREMENTING COUNTERS. INTERRUPTS ARE GENERATED WHEN THE COUNTER ROLLS OVER TO 0000_{16}. HOWEVER, PROGRAMMER VISIBLE INTERRUPTS ARE GENERATED WHEN THE MAIN STORE LOCATION ASSOCIATED WITH THE INTERVAL COUNTER IS ALSO ZERO

NOTES: ▷ ERROR DETECTION AND CORRECTION CIRCUIT (EDAC) CAN DETECT AND CORRECT 1 BIT IN ERROR (SOFT ERROR). IT WILL DETECT 2 BITS IN ERROR (HARD ERROR). A HARD ERROR IS REPORTED TO THE MEMORY MANAGEMENT UNIT AND REPRESENTS A MEMORY LOCATION FAILURE

12 GPC 2

SIGNATURE		DATE	NATIONAL AERONAUTICS AND SPACE ADMINISTRATION LYNDON B. JOHNSON SPACE CENTER HOUSTON, TEXAS
DSGN			
DR B.J. TEDDER JR.		6/12/86	GENERAL PURPOSE COMPUTER (AP101-S)
ENGR B.F. JACKSON			
ENGR Bruce F. Jackson		8/27/91	
APP Mark B. Evans		8/27/91	
APP			SPACE SHUTTLE DWG NO 8.12
OMNIPLAN S.K. Kimbrough		9.3.91	ALL
LTR E	PCN 1		121 X 34 PAGE SHEET 2 OF 2

BASIC REV E-1

T S R Q P O N M L K J

POWER SUPPLY
20A +5 VOLT CONVERTER
BIAS VOLTAGE CONVERTER
20A +5 VOLT CONVERTER
CONTROL LOGIC
15A ±12 VOLT CONVERTER
BIAS VOLTAGE CONVERTER
BIAS VOLTAGES
CONTROL LOGIC
10A +5 VOLT CONVERTER (MEMORY)
+5 VDC
+12 VDC
-12 VDC
POI (CPU)
POI (MEM)
POR
SLEEP
CHARGE 2
CHARGE 1
+5 VDC MEM
+5 VDC MEM

CMOS MEMORY AND CONTROLS
MEMORY MANAGEMENT UNIT 1 (MMU1)
SOFT ERROR COUNTER
H-BUS RCVR
ADDRESS MUX
EDAC ADDRESS REGISTER
ADDER
ODD ADDRESS
EVEN ADDRESS
EVEN DATA MUX
ODD DATA MUX
ADDRESS EXPANSION LOGIC
MSB
EVEN DATA REGISTER
X10 DATA REGISTER
X10 CMD REGISTER
ODD DATA REGISTER
BSV
DSV
BSR
DSR
OSE RAM
GEN REG SET
DSE1
DSE4
SELECT LOGIC
BASE USED
BSR/DSR-BSV/DSV SEL
TIMER A INTERRUPT
INTERVAL TIMER A
CPU OSCILLATOR
40 MHZ OSC
÷2
÷2
TIMING TO PAGES
CONTROLS
INTERVAL TIMER B
TIMER B INTERRUPT
H-BUS DRVR

MEMORY MANAGEMENT UNIT - 2 (MMU2)
MEMORY FAULT EXTENSION REG
ILLEGAL ADDRESS
STORE PROTECT
HPP
SOFT ERROR
HARD ERROR
STORE PROTECT ERROR (I/O)
HARD ERROR
ILLEGAL I/O
MEMORY PARITY/EDC
FAULT HOLDING REGISTERS
IU REGISTER
EA OPERAND
EU REGISTER
I/O REGISTER
FAULT DETECT LOGIC
DMA MEMORY MULTI BIT ERROR
SP ERROR
HARD ERROR
ADDRESS
EU MEMORY ERROR
IU MEMORY ERROR
INTERRUPT DRIVERS
DMA PAR ERR
ILLEGAL ADDRS
STORE PROTECT

CMOS MEMORY PAGE 2
CMOS MEMORY PAGE 1
ODD MEMORY ADDRESSES
EVEN MEMORY ADDRESSES
EVEN ADDRESS REGISTER
H-BUS RCVR
ERROR CORRECTION CODE 128K X 3
ERROR DETECTION AND CORRECTION
CMOS MEMORY 128K X 16
ERROR DETECTION AND CORRECTION
ERROR CORRECTION CODE 128K X 6
SP ERROR
HARD ERROR
SOFT ERROR
H-BUS DRVR

H - BUS ARBITER

PRIORITY	REQUESTER
1	SCRUB
2	DMA WRITE
3	DMA READ
4	SDI R/W
5	XIO/ICR/IIO
6	EU READY FOR EA WRITE
7	EU WRITE
8	EU READ
9	EA READ
10	SPARE
11	IU READ

EU WRITE ENABLE
EU READ ENABLE
EA READ ENABLE
IU READ ENABLE
SCRUB REQUEST
SCRUB ENABLE
SCRUB LOGIC
TIMING AND CONTROL LOGIC
DMA ACCEPT
POI (MEM)

BITE
BATTERY STAT
CHARGER STAT
ELECTRONIC SWITCH
LEVEL DETECT >3.0 VOLTS
BATTERY 1
BATTERY BACKUP UNIT (BBU)

INSTRUCTION UNIT (IU)
REGISTER SET C
REGISTER SET B
REGISTER SET A
4 X 16 BITS
4 X 16 BITS
16-32
0-15
H-BUS RCVR
ALIGNMENT MUX
SELECT A ● B + A ● C LOGIC
BRANCH TAKEN
ADDR DRVR
INSTRUCTION UNIT PROGRAM COUNTER
IU READ REQUEST
CONFLICT DETECTION LOGIC
CONFLICT DETECTED/RESTART PIPELINE
EXPONENT AB MUX
EXPONENT B REGISTER
EXPONENT A REGISTER
EXPONENT B1 MUX
EXPONENT A1 MUX
EXPONENT ALU
EXPONENT 1 REGISTER
RIGHT LOCA
LEFT LOCAL ST
CPU SECTOR
GROUP 16
GROUP 1
REG 1
REG 16
FRACTION A REGISTER
FRACTION A1 MUX
Y-BUS DRVR
FRACTION D REGISTER

BRANCH TAKEN
BASE USED
BSR/DSR - BSV/DSV SELECT
EA READ REQUEST
EA WRITE REQUEST
EA WRITE (EU READY)
XOI/ICR/IIO

FRACTION ACU CNTL				Y-MUX CONTROL	EXP PROM ADDR	E	EXP PROM ADDR	FW / HW	FINAL OUTPUT	LOCAL STORE ADDRESS CONTROLS	EXP PROM ADDR	LINK GR	SEQUENCER CONTROL	SEQUENCER CONTROL	MISCELLANEOUS FIELD			NEXT ROS ADDRESS	
FUNCTION	MODE	CARRY IN	3 INPUT SELECT												TYPE	SUB TYPE	EMIT FIELD		

FRACTION FLOW CONTROL (16 X 32 EXPANSION PROM)			
Y-MUX ENABLE	FC MUX CNTL	FC REGISTER FILL	FA REG FILL

FRACTION REGISTER CONTROL (24 X 32 EXPANSION PROM)								
B REGISTER	C REGISTER	A REGISTER	LOCAL STORE WRITE CONTROL	LOCAL STORE MUX MODE	D REGISTER	CONST SECTOR REG	CPU SECTOR REG	AB MUX SEL

DATE: 09/30/91 | NAME: MFB | VERSION: INK 7

V U T S R Q P O N

8 7 6 5 4 3 2 1

H-BUS (DATA)

H-BUS (ADDRESS)

POWER SUPPLY

OVER TEMP STATUS

20A +5 VOLT CONVERTER

BIAS VOLTAGE CONVERTER

20A +5 VOLT CONVERTER

CONTROL LOGIC

15A ±12 VOLT CONVERTER

EMI FILTER

BIAS VOLTAGE CONVERTER

BIAS VOLTAGES

CONTROL LOGIC

10A +5 VOLT CONVERTER (MEMORY)

+5 VDC

+12 VDC

-12 VDC

+5 VDC MEM

+5 VDC MEM

POI (CPU)

POI (MEM)

POR

SLEEP

CHARGE 2

CHARGE 1

CMOS MEMORY AND

MEMORY MANAG UNIT 1 (MMU1

SOFT ERROR COUNTER

H-BUS RCVR

ADDRESS MUX

EDAC ADDRESS REGISTER

ADDER

ODD ADDRESS

EVEN ADDRESS

EVEN DATA MUX

ODD DATA MUX

ADDRESS EXPANSION LOGIC

ODD ADDRESS

EVEN ADDRESS

MSB

BSV DSV BSR DSR

DSE RAM

GEN REG SET

DSE1

DSE4

SELECT LOGIC

BASE USED

BSR/DSR-BSV/DSV SEL

EVEN DATA REGISTER

XIO DATA REGISTER

XIO CMD REGISTER

ODD DATA REGISTER

TIMER A INTERRUPT

INTERVAL TIMER A

CPU OSCILLATOR

40 MHZ OSC

÷2 ÷2

CONTROLS

TIMING TO PAGES

INTERVAL TIMER B

TIMER B INTERRUPT

H-BUS DRVR

MEMORY MANAGEMENT UNIT - 2 (MMU2)

MEMORY FAULT EXTENSION REG

ILLEGAL ADDRESS

STORE PROTECT

MMP

SOFT ERROR

HARD ERROR

STORE PROTECT ERROR (I/O)

HARD ERROR

ILLEGAL I/O

FAULT HOLDING REGISTERS

IU REGISTER

EA OPERAND

EU REGISTER

I/O REGISTER

FAULT DETECT LOGIC

MEMORY PARITY/EDC

DMA MEMORY MULTI BIT ERROR

SP ERROR

HARD ERROR

ADDRESS

EU MEMORY ERROR

IU MEMORY ERROR

INTERRUPT DRIVERS

DMA PAR ERR

ILLEGAL ADDRS

STORE PROTECT

H - BUS ARBITER

PRIORITY	REQUESTER
1	SCRUB
2	DMA WRITE
3	DMA READ
4	SDI R/W
5	XIO/ICR/IIO
6	EU READY FOR EA WRITE
7	EU WRITE
8	EU READ
9	EA READ
10	SPARE
11	IU READ

EU WRITE ENABLE

EU READ ENABLE

EA READ ENABLE

IU READ ENABLE

CMOS MEMORY PA

CMOS MEMORY PAGE

ODD MEMORY ADDRESSES

EVEN MEMORY ADDRESSES

EVEN ADDRESS REGISTER

H-BUS RCVR

ERROR CORRECTION CODE 128K X 3

ERROR DETECTION AND CORRECTION

CMOS MEMORY 128K X 16

ERROR DETECTION AND CORRECTION

ERROR CORRECTION CODE 128K X 6

SP ERROR

HARD ERROR

SOFT ERROR

H-BUS DRVR

SCRUB REQUEST

SCRUB ENABLE

SCRUB LOGIC

TIMING AND CONTROL LOGIC

DMA ACCEPT

BITE

BATTERY STAT

CHARGER STAT

ELECTRONIC SWITCH

LEVEL DETECT >3.0 VOLTS

BATTERY 1

BATTERY BACKUP UNIT (BBU)

BASIC REV E-1

ENHANCED MULTIPLEXER/DEMULTIPLEXER

SEQUENCE CONTROL UNIT (SCU) 2 (SECONDARY)

SEQUENCE CONTROL UNIT (SCU) 1 (PRIMARY)

A/D CONVERTER 2 (SECONDARY)

A/D CONVERTER 1 (PRIMARY)

CONTROL STORE MEMORY (512-WORD)

40-BIT MICRO-INSTRUCTION FIELD FORMAT

INSTRUCTION CONTROL DECODE

CONTROL STORE ADDRESSING LOGIC

SEQUENCE PROM FORMAT

SEQUENCE PARITY CHECK LOGIC

SEQ MUX

BUS SELECT DECODE

SCU IN BUS MERGE

SCU OUT BUS MERGE

BSR READ/LOAD SELECT LOGIC

MEMORY CONTROL LOGIC

BITE STATUS REGISTER LOGIC

CONDITION SET DECODE

REG FILE SELECT DECODE

SEQ MUX SELECT DECODE

CHECK-BIT VERIFICATION

RESPONSE DATA WORD REQUEST FORMAT

COMAND DATA WORD TRANSFER FORMAT

DIGITAL RESPONSE DATA WORD FORMAT

SCU IN BUS MULTIPLEXER

IOM SELECT LOGIC

IOM REPLY MULTIPLEXER

MDM SYSTEM CLOCK

EMDM/IOM CONFIGURATION

EMDM	0	1	2	3	4	5	6	7	8	9	10	11	12	13	14	15
FF 1-FF 3	TAC	AID	DOH	SIO	DIH	DOL	DIL	AIS	AOD	DIH	DOH	SIO	DIH	DOL	AID	DIL
FF 4	TAC+	AIDX	DOH	SIO+	DIH	DOL	DIL	AIS	AOD	DIH	DOH	SIO	DIH	DOL	AID	DIL
FA 1-FA 4	AOD	AID	DOL	DIH	AOD	DIL	AIS	DOH	DIH	AID	DOL	DIH	DOH	DIL#	AIS	DOH
LF 1	DOH	DIL#	DOH	AIS#	AOD	DOH	DIH	DOL	DOH	DIH	DOH	AIDX	DIH#	DOH	DIL#	
LA 1	DOH	DIL#	DOH	AIS#	AOD	DOH	DIH#	DOL#	DOL#	DOH	DIH#	DOH	AIDX	DIH#	DOH	DIL#
LM 1	DOH	DIL#	DOH	AIS#	AOD	DOH	DIH	DOL	DOL	DOH	DIH	DOH	AIDX	DIH#	DOH	DIL#
PF 1	DOL	AID	DOH	DIH	AIDX	DIL	DIH	DOH	SIO	DIH	DOL	AID	AODX	DIL	DOH	SIO#
PF 2	DOL	AID	DOH	DIH	AIDX	DIL	DIH	DOH	SIO	DIH	DOL	AID	AOD	DIL	DOH	SIO#
FLX 1																
FLX 2																
LL 1, LL 2	DOL	DIL	DIH	AID	DOL	DIL	DIH	AID								
LR 1, LR 2	DOL	DIL	DIH	AID	DOL	DIL	DIH	AID								
OF 1	SIO	AIS	DIL	AIS	DIH	AIS	DIH	AIS	AID#	AIS	DIL	AIS	DIH	AIS	DIH	AIS
OF 2	SIO	AIS	DIL	AIS	DIH	AIS	DIH	AIS	AID	AIS	DIL	AIS	DIH	AIS	DIH	AIS
OF 3	SIO#	AIS	DIL	AIS	DIH	AIS	DIH	AIS	AID	AIS	DIL	AIS	DIH	AIS	DIH	AIS
OF 4	DIL	AIS	DIH	DIL	DIH	AIS	DIH	DIL#	AIS	DIH	DIL#	AIS	DIH	AIS	DIH	AIS
OA 1-OA 3	AIS	DIH	AIS	DIL	AIS	DIH	AIS	DIH	DIL#	AIS	DIH	AIS	DIH	AIS	DIL	AIS

+AND X DUMMY IOM'S USED IN CPC I/O TRANSACTIONS (++OUTPUT/ >> INPUT)

#IOM'S PRESENT BUT NOT USED

BASIC REV E-6

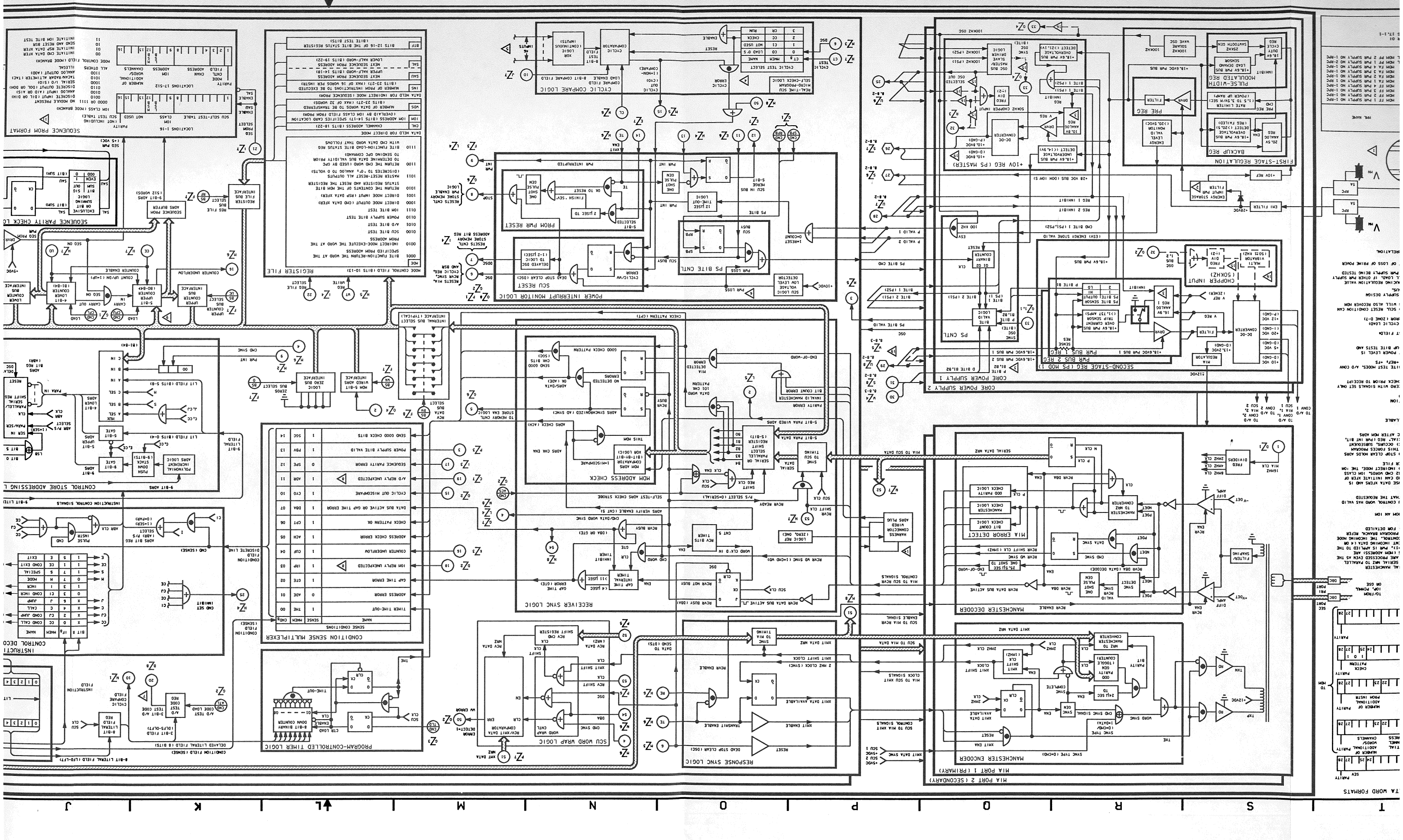
CORE POWER SUPPLY 1
CORE POWER SUPPLY 2
SECOND-STAGE REG (PS MOD 1)
PWR BUS 1 REG
PWR BUS 2 REG
FIRST-STAGE REGULATION
BACKUP REG
PULSE-WIDTH MODULATED REG
PRE REG
CHOPPER INPUT (50KHZ)
+10V REG (PS MASTER)
CYCLIC COMPARE LOGIC
POWER INTERRUPT MONITOR LOGIC
SCU RESET
PS BITE CNTL
PROM PWR RESET
SEQUENCE FROM FORMAT
REGISTER FILE
CONDITION SENSE MULTIPLEXER
PROGRAM-CONTROLLED TIMER LOGIC
RECEIVER SYNC LOGIC
RESPONSE SYNC LOGIC
SCU WORD WRAP LOGIC
MDH ADDRESS CHECK
MIA PORT 1 (PRIMARY)
MIA PORT 2 (SECONDARY)
MANCHESTER ENCODER
MANCHESTER DECODER
MIA ERROR DETECT
CONTROL STORE ADDRESSING LOGIC
INSTRUCTION CONTROL SIGNALS
INSTRUCTION CONTROL DECODE
SEQUENCE PARITY CHECK LOGIC
SEQUENCE ADRS BUFFER
SEQUENCE ADRS PROM
CONDITION FIELD (SENSE)
DISCRETE LINE
8-BIT LITERAL FIELD (L0-L7)
DELAYED LITERAL FIELD (DL0-DL7)
LITERAL FIELD (BITS 0-4)
LIT FIELD (BITS 5-8)
LIT FIELD (BITS 0-4)
9-BIT ADRS
9-BIT LITERAL FIELD
CONDITION FIELD (BITS 0-4)
INSTRUCTION FIELD
CONDITION FIELD (BITS 5-8)
SEND GOOD CHECK BITS
POWER SUPPLY BITE VALID
SEQUENCE PARITY ERROR
A/D REPLY UNEXPECTED
CYCLIC OUT MISCOMPARE
DATA BUS ACTIVE OR GAP TIME ERROR
CHECK PATTERN OK
ADDRESS CHECK ERROR
COUNTER UNDERFLOW
IOH REPLY UNEXPECTED
GAP TIME ERROR
ADDRESS ERROR
TIMER TIME-OUT
SENSE CONDITIONS
REGISTER FILE (BITS 10-13)
MDH CONTROL FIELD (BITS 10-13)
SEQUENCE PARITY CHECK LOGIC
SEQUENCE ADRS BUFFER
SEQUENCE ADRS PROM
SEQUENCE PROM FORMAT
SCU SELF-TEST TABLE
LOCATIONS I-16
LOCATIONS I7-512
PARITY
CLASS
ADDRESS
CHANNELS
ALL OTHERS
NOT USED
IOM
IOM CLASS (MODE BRANCH)
SCU SELF-TEST (MODE BRANCH)
MODE CONTROL FIELD (MODE BRANCH)
INITIATE IOM BITE TEST
INITIATE SCU SELF-TEST
INITIATE RSP DATA XFER
INITIATE CMD DATA XFER
SCU RESET CONDITION
SCU RESET
SCU WORD WRAP
SCU TO MIA DATA
SCU TO MIA ENABLE SIGNALS
SCU TO MIA RCVR CONTROL SIGNALS
MIA TO SCU DATA
MIA TO SCU CONTROL SIGNALS
MIA TO SCU RCVR
MIA TO SCU DATA
MIA TO SCU CLOCK SIGNALS
MIA TO SCU XMIT CONTROL SIGNALS
MIA DATA SYNC
SCU 1
SCU 2
+5VDC
+15VDC
-15VDC
+28 VDC BUS (COM TO S)
+18.6V PWR BUS
+18.6VDC PWR BUS 1
+18.6VDC PWR BUS 2
+10V REF
+10 VDC (P-GND)
+20 VDC (P-GND)
+5 VDC (P-GND)
+12 VDC (P-GND)
-12 VDC (D-GND)
-20 VDC (D-GND)
100KHZ OSC
50KHZ OSC
2MHZ CLK
1MHZ CLK
500KHZ SQUARE WAVE OSC
SYNC TO SCU TIMING
SERIAL DATA
SERIAL DATA MRZ
XMIT DATA MRZ
RCVR DATA
RCVR ENABLE
RCVR BUSY
RCVR SHIFT CLK (1MHZ)
RCVR SHIFT CLK (2MHZ)
RCVR DATA BUS ACTIVE
RCVR NOT BUSY
RCVR DATA BUS ACTIVE (DBA)
RCVR W/ SYNC (1=CMD W)
RCVR W/ SYNC
CMD SYNC
CMD WORD
WORD CLK'D IN
WORD CLK'D OUT
SYNC TYPE (0=CMD)
SYNC TYPE (0=CMD/1=DATA)
XMIT ENABLE
XMIT DATA AVAILABLE
XMIT SHIFT CLOCK
2 MHZ CLOCK (SYNC)
TRANSMIT ENABLE
DEAD STOP CLEAR (DSC)
RESET
ADRS VERIFY ENABLE (CNT 5)
ADRS CHECK (ACH)
ADRS SYNCHRONIZED (AD SYNC)
ADRS CHK ENA
ADRS/DATA
NO DETECTED ERRORS
SEND GOOD CHK BITS (GOOD)
GOOD CHECK PATTERN
END-OF-WORD
PARITY ERROR
INVALID MANCHESTER
BIT COUNT ERROR
DATA 101 OR 010 PATTERN
5-BIT PARA WIRED ADRS
5-BIT PARA DATA
MDH 5-BIT WIRED ADRS
MDH ADRS (BIT-BY-BIT EXCLUSIVE-OR)
1=MISCOMPARE
SHIFT REGISTER (5-BIT)
PARALLEL SHIFT REGISTER
SERIAL DATA
P/S SELECT (0=SERIAL)
SHIFT REG ENA
SCU CLK
SCU DATA
SCU WORD WRAP CNTL
CMD SYNC
CMD WORD
WORD CLK'D IN
WORD CLK'D OUT
CAP TIME INTERVAL TIMER
CAP TIME ERROR (GTE)
<4 USEC
>11 USEC
GAP TIME INTERVAL TIMER
INHIBIT TIMER
CNT 5
BIT TIMER
LOGIC REF (ZERO, ONE)
DBA OR GTE
RCVR BUSY
RCVR NOT BUSY
RCVR DATA BUS ACTIVE
RCVR DATA BUS ACTIVE (DBA)
RCVR W/ SYNC (1=CMD W)
RCVR W/ SYNC
CMD SYNC
CMD WORD
WORD CLK'D IN
WORD CLK'D OUT
SYNC TYPE (0=CMD)
SYNC TYPE (0=CMD/1=DATA)
XMIT ENABLE
XMIT DATA AVAILABLE
XMIT SHIFT CLOCK
2 MHZ CLOCK (SYNC)
TRANSMIT ENABLE
DEAD STOP CLEAR (DSC)
RESET
ADRS VERIFY ENABLE (CNT 5)
ADRS CHECK (ACH)
ADRS SYNCHRONIZED (AD SYNC)
ADRS CHK ENA
ADRS/DATA
NO DETECTED ERRORS
SEND GOOD CHK BITS (GOOD)
GOOD CHECK PATTERN
END-OF-WORD
PARITY ERROR
INVALID MANCHESTER
BIT COUNT ERROR
DATA 101 OR 010 PATTERN
5-BIT PARA WIRED ADRS
5-BIT PARA DATA
MDH 5-BIT WIRED ADRS
MDH ADRS (BIT-BY-BIT EXCLUSIVE-OR)
1=MISCOMPARE
SHIFT REGISTER (5-BIT)
PARALLEL SHIFT REGISTER
SERIAL DATA
P/S SELECT (0=SERIAL)
SHIFT REG ENA
SCU CLK
SCU DATA
SCU WORD WRAP CNTL

DATE: 07/13/95	NAME: BJB	VERSION: BPT.6
DATE: 07/26/95	NAME: LAM	VERSION: BPT.7
DATE: 05/10/96	NAME: MDU	VERSION: INK.3

19 — SRB MDM'S NO LONGER CROSS-STRAP REDUNDANT +18.6VDC POWER BUSES INFLIGHT. ISOLATION IS MAINTAINED VIA ELECTRONIC SWITCHES (REFER TO DWG 8.8 SHEET 3, ZONE V-5 FOR DETAILS). SRB MDM'S DO NOT UTILIZE CORE PWR SUPPLY +10VDC REGULATOR LOGIC (PS MASTER HYBRID)

18 — THE FOLLOWING LOGIC REPRESENTATION SUMMARIZES THE HARDWARE AND SOFTWARE LOGIC BEHIND THE BITS IN THE BITE STATUS REGISTER, AND THE ACTION TAKEN

BITE STATUS REGISTER (BSR) HARDWARE/SOFTWARE LOGIC SUMMARY

BIT 1 POWER INTERRUPT (PWR INT)
BIT SET DURING PWR-UP OR PWR-DOWN (REFER TO ZONE M,N-3 FOR DETAILED LOGIC) EACH SCU WILL SIMULTANEOUSLY DETECT PWR INT AND SET ITS OWN BSR
ACTION: ALL ANALOG AND DISCRETE OUTPUT CHANNELS ARE ABOUT TO BE RESET TO ZERO VDC

BIT 2 INCOMING DATA ERROR (IDE)
HARDWARE | SOFTWARE
INVALID MANCHESTER, BIT COUNT ERROR, PARITY ERROR, MIA END-OF-WORD → MIA DETECTED ERROR (0=ERR); MDM ADRS OK, CMD DATA WD '101' PATTERN CHECK OK → (0=ERR); (ADE), CMD WD; (SGC), CMD DATA WD → IDE → SET BSR BIT 2; EOM (TERMINATE MICRO PROG)
ACTION: CMD WD/CMD DATA WD PROCESSING IS TERMINATED (SUBSEQUENT INCOMING DATA WORDS OF SAME MESSAGE ARE DISCARDED)

BIT 3 NON-EXISTANT IOM CHANNEL ADRS (NEC)
BIT SET WHEN IOM CHANNEL ADRS NOT VALID FOR SELECTED IOM ADRS (THAT IS, NO IOM REPLY AT 'NEC' CHECK TIME) (REFER TO ZONE F-1 FOR DETAILS)
ACTION: SUBSEQUENT CMD DATA WORDS ARE ACCEPTED IF CORRECT. ANY INCORRECT RESPONSE DATA WORD IS FLAGGED TO THE GPC VIA CLEARED V-BIT

BIT 4 UNABLE TO TRANSFER DATA TO/FROM IOM, OR DATA TRANSFER INCOMPLETE (NTI)
BIT SET WHEN IOM REPLY (IRP) OR A/D REPLY (ADR) INDICATES FAILURE TO COMPLETE DATA TRANSFER (REFER TO ZONE F-1 FOR DETAILS)
ACTION: PROCESSING CONTINUES (V-BIT IS CLEARED FOR RESPONSE DATA WD THAT ENCOUNTED THE PROBLEM, SUBSEQUENT DATA WDS NOT AFFECTED)

BIT 5 TOO MANY WORDS IN LAST MESSAGE (TMW)
DATA SYNC DETECTED, CTR UNDERFLOW CND* (0=NOT SET) (CUF), GAP-TIME ERROR CND (0=NO GTE); UNEXPECTED CMD DATA WD, (GTE) → TMW, TMW** → SET BSR BIT 5; EOM (TERMINATE MICRO PROG)
ACTION: CMD DATA WD PROCESSING IS TERMINATED (THAT IS, CMD DATA WD IS IGNORED)
*IF CMD WD MESSAGE TERMINATED PREMATURELY DUE TO DETECTED ERROR, CTR UNDERFLOW SET TO BYPASS THIS CHECK
**BIT 5 SET DURING INITIAL PWR-UP SEQUENCE AND DURING SCU BITE TEST SEQUENCING

BIT 6 LAST CMD NOT COMPLETED (LCN)
NEW CMD WD, SCU BUSY NOW → SET BSR BIT 6; LCN*
ACTION: NEW CMD WORD IS ACCEPTED
*BIT 6 SET DURING INITIAL PWR-UP SEQUENCE AND DURING SCU BITE TEST SEQUENCING

BIT 7 SIMULTANEOUS OPERATION OF BOTH SCU'S (SIMOP)
OTHER SCU ALREADY BUSY, NEW CMD WORD RECEIVED → SIMOP → SET BSR BIT 7 (VIA HDWRE); 'EOM' (VIA HDWRE)
ACTION: CAUSES IMMEDIATE HALT OF PROCESSING FOR BOTH PRI AND SEC SCU'S. EITHER SCU WILL CONTINUE UPON RECEIPT OF A NEW CMD WORD

BIT 8 ILLEGAL MODE BRANCH COMMANDED (IMD)
INVALID MODE CNTL FIELD BRANCH (ZONE M-3); INVALID IOM CLASS MODE BRANCH (ZONE J-1); INCOMPATIBLE PROG SEQ/IOM CLASS MODE BRANCH; INCOMPATIBLE PROG SEQ/MODE CNTL FIELD BRANCH → ILLEGAL BRANCH; UNEXPECTED CMD DATA WD (REFER TO BIT 5 LOGIC) (1=GTE), GAP TIME ERROR (GTE) → ILLEGAL CMD; CMD WD → IMD → SET BSR BIT 8; EOM (TERMINATE MICRO PROG)
ACTION: CMD WD/CMD DATA WD PROCESSING IS TERMINATED
*BIT 8 MAY BE SET DURING SCU BITE TEST TO INDICATE UNSUCCESSFUL BITE TEST

BIT 9 INTERNAL ERROR DETECTED (IER)
SEQUENCE PROM PARITY CHECK FAIL (0=ERR) (SPE); UNEXPECTED IOM REPLY (1=ERR) (IRP); UNEXPECTED A/D REPLY (1=ERR) (ADR); UNEXPECTED PS BITE VALID (PBV) → REPLY BUS CHECK FAIL; PS BITE TEST; RSP DATA CHECK-BIT PATTERN INVALID (REFER TO ZONE D-7 FOR DETAILS) → INTERNAL ERR → INT ERR → IER → SET BSR BIT 9; CLEAR V-BIT; EOM (TERMINATE MICRO PROG)
ACTION: PROCESSING IS TERMINATED (IF TRANSMITTING A RSP DATA WD, TRANSMISSION IS COMPLETED WITH THE SEV V-BIT CLEARED, THEN THE PROCESSING IS TERMINATED)

BIT 10 INCOMING (MIA) WORD GAP INTERNAL ERROR (GTE)
GAP TIME ERROR (1=ERR) (GTE); DBA; EXPECTED CMD DATA WORD* → GTE → SET BSR BIT 10; EOM (TERMINATE MICRO PROG)
ACTION: PROCESSING IS TERMINATED (REMAINING INCOMING CMD DATA WDS ARE IGNORED) NEW CMD WORDS ARE ACCEPTED
*PROGRAM WAITS UNTIL DBA CONDITION IS MET PRIOR TO EACH EXPECTED CMD DATA WORD (DBA = DATA BUS ACTIVE OR GTE)

BIT 11 SUCCESSFUL BITE TEST COMPLETION (SBC)
BIT SET WHEN SCU BITE TEST, A/D BITE TEST, OR CORE POWER SUPPLY BITE TEST SUCCESSFULLY COMPLETED
ACTION: NO ACTION REQUIRED

17 — THE FLEX MDM CARD CONFIGURATION IS MISSION DEPENDENT. A FLEX MDM HAS 1 CORE POWER SUPPLY, 1 MIA, 1 SCU, 1 A/D CONVERTER, AND 8 I/O MODULES.

16 — CIRCUIT IS UNIQUE TO '6XXX' SERIES MDM'S (POST OV-102 'INCREMENT III' DESIGN DOES NOT UTILIZE MASTER/SLAVE OSCILLATOR BUS SELECT LOGIC TO DRIVE DC-DC CONVERTERS). DUE TO LIMITED SPARES, THESE MDM'S MAY BE FLOWN ON ANY ORBITER.

15 — CIRCUIT IS UNIQUE TO '5XXX' SERIES MDM'S (OV-102 DESIGN, DEVELOPMENT, TEST, AND EVALUATION UNITS). DUE TO LIMITED SPARES, THESE MDM'S MAY BE FLOWN ON ANY ORBITER.

14 — MDM WIRED ADDRESS (DECIMAL):

FF 1 - FF 4, PF 1, LF 1	10	FA 1 - FA 4, PF 2, LA 1	12	FLX 1 *, FLX 2 *, + LM 1 24	LL 1 9, LL 2 6, LR 1 15, LR 2 18	OF 1 12, OF 2 15, OF 3 17, OF 4 18	OA 1 10, OA 2 6, OA 3 9

* MISSION DEPENDENT ADRS = 6, 9, 15, 29, OR 30
\+ LM 1 IS USED FOR EDO MISSIONS

EMDM COMMAND WORD AND RESPONSE DATA WORD FORMATS

TO IOP, PCMMU, OR GSE:

RSP DATA WORD: DATA SYNC (bits 1–3) | MDM ADDRESS (4–8) | DATA (13) (9–24) | SEV (25–27) | PARITY (28)

TO MDM:

CMD WORD: DIRECT MODE (IOP, PCMMU, GSE): CMD SYNC (1–3) | MDM ADDRESS (4–8) | SPARE (14) (9) | MODE CONTROL FIELD (10–13) | IOM ADDRESS (14–17) | INITIAL CHANNEL ADDRESS (18–22) | NUMBER OF ADDITIONAL WORDS/CHANNELS (23–27) | PARITY (28)

CMD WORD: INDIRECT MODE (IOM, PCMMU, GSE): CMD SYNC (1–3) | MDM ADDRESS (4–8) | SPARE (14) (9) | MODE CONTROL FIELD (10–13) | PROM SEQ STARTING ADDRESS (14–22) | NUMBER OF ADDITIONAL PROM INSTR (23–27) | PARITY (28)

CMD DATA WORD (IOP, PCMMU, GSE): DATA SYNC (1–3) | MDM ADDRESS (4–8) | DATA (13) (9–24) | CHECK PATTERN 1 0 1 (25–27) | PARITY (28)

MDM RTN WORD CMD WORD (IOP, PCMMU, GSE): CMD SYNC (1–3) | MDM ADDRESS (4–8) | SPARE (14) (9) | MODE CNTL (10–13) | MDM WORD WRAP (14–27) | PARITY (28)

TO/FROM IOP, PCMMU, OR GSE — SEC PORT DBC, PRI PORT DBC

EMDM OPERATION OVERVIEW

MIA RECEIVES CMD WD VIA DATA BUS, CONVERTS WORD FROM SERIAL MANCHESTER TO NRZ AND SENDS WORD SERIALLY TO THE SCU. SCU CONVERTS SERIAL NRZ TO PARALLEL DATA, 4 OR 5 BITS AT A TIME. THESE 4-BIT OR 5-BIT GROUPS ARE PROCESSED EVEN AS THE MIA RECEIVES THE REMAINDER OF THE WORD. THE FIRST 5 BITS (MDM ADDRESS) ARE COMPARED WITH MDM'S OWN WIRED ADRS. IF ADRS OK (AD SYNC=1), PWR IS APPLIED TO THE CONTROL STORE MEMORY (MDM MICRO-PROCESSOR). THE SUBSEQUENT INCOMING DATA (4 OR 5 BITS AT A TIME) IS ROUTED THRU THE MDM UNDER PROGRAM CONTROL. THE INCOMING MODE CONTROL FIELD DIRECTS THE MICRO-PROCESSOR TO A SPECIFIC PROGRAM BRANCH. REFER TO THE 'MDM PROGRAM INTERPRETATION HANDBOOK' (JSC-10579) FOR DETAILED PROGRAM LOGIC

13 — DATA FIELD DEFINES THE DATA TO BE SENT TO OR RECEIVED FROM AN IOM

12 — SIGNALS SCU THAT THE IOM HAS BEEN SELECTED, THAT THE SCU CONTROL WORD HAS VALID CHANNEL ADDRESS, VALID TASK AND PROPER CHECK BITS, AND THAT THE REQUESTED OPERATION HAS BEEN PERFORMED

11 — SEQ PROM IS USED IN INDIRECT MODE FOR CMD DATA OR RESPONSE DATA XFERS AND IS PROGRAMMED UNIQUELY FOR EACH MDM TYPE. EACH PROM CMD WORD CAN INITIATE XFER OF 1 TO 16 MDM RESPONSE WORDS. MAX PROM PROGRAM LENGTH IS 32 CMD WORDS. IOM CLASS FIELD IS DETERMINED FROM IOM ADDRESS FOR BOTH DIRECT AND INDIRECT MODE. THE IOM CLASS FIELD THEN OVERLAYS THE IOM ADDRESS IN THE REGISTER FILE

10 — DURING INITIAL PWR-UP SEQUENCE (AFTER DSC), DELAYED DEAD STOP CLEAR HOLDS ADRS BIT REGISTER RESET UNTIL CONTROL STORE PROM IS ENABLED. THIS FORCES PROGRAM TO OCTAL ADRS 000 (INITIAL PWR UP). UNLESS PWR LOSS (DSC) OCCURS, SUBSEQUENT PROGRAM BRANCHES ARE CONTROLLED BY CONTENTS OF THE 'SPECIAL' REG (PWR INT BIT, CMD SYNC BIT). FIRST INSTRUCTION WILL BE EXECUTED 5µ SEC AFTER MDM ADRS COMPARISON (ZONE N-5)

9 — 5-BIT UPPER AND 4-BIT LOWER UP/DOWN COUNTERS ARE CONTROLLABLE VIA SCU MICRO INSTRUCTION. COUNTERS FUNCTION AS:
1. COUNT DOWN NUMBER OF WORDS TO BE TRANSFERRED
2. INCREMENT CHANNEL ADDRESS
3. HOLD AND INCREMENT 9 BIT ADDRESS FOR PROM EXECUTION
4. CONDITIONAL BRANCH REGISTER (COUNTER UNDER FLOW)

8 — IOM REPLY (IRP) AND A/D REPLY (ADR) ARE NORMALLY LOGIC ZERO WITH SIGNALS SET ONLY AT SPECIFIED TIMES. MICRO PROGRAMS PERFORM A REPLY BUS CHECK PRIOR TO RECEIPT OF DATA TO VERIFY REPLY LINES NOT FAILED ON

7 — SELECTS A/D MODE OF OPERATION: IOM DATA OR ONE OF FIVE BITE TEST MODES. A/D CONV BITE TEST RETURNS FIVE RSP DATA WORDS: -FS, -REF, NULL, +REF, +FS

6 — MIA AND SCU ARE HELD IN RESET CONDITION UNTIL 90 PERCENT POWER LEVEL IS REACHED. AFTER RESET PERIOD, THE SCU CONDUCTS SCU POWER-UP BITE TESTS AND AFTER SUCCESSFUL COMPLETION ENABLES THE MIA

5 — FORTY-SIX INPUTS EXCLUSIVE OR'ED TO PRODUCE AN 8-BIT TEST FIELD:
1. ALL CONDITION SET DISCRETES EXCEPT 'EOM'
2. CONTROL STORE PROM BITS 17 THRU 37 EXCEPT BIT 35 (CYCLIC LOAD)
3. RSP WD CHECK-BIT VERIFICATION DETECTED INTERNAL ERROR (ZONE D-7)

4 — NONCOMPARISON RESULTS IN IMMEDIATE RESET OF BOTH MIA AND SCU. RESET CONDITION CAN ONLY BE REMOVED BY CYCLING POWER TO THE MDM. PORT MODING WILL ALSO RECOVER MDM

3 — BOTH POWER SUPPLIES ARE CONTINOUSLY IN OPERATION. POWER SUPPLY DESIGN DOES NOT ATTEMPT TO BALANCE THE POWER PROVIDED BY EACH BUS.
DURING PS BITE TESTS, REGULATORS ARE 'INHIBITED' (BY REDUCING REGULATION VALUE ABOUT 2-3%) IN ORDER TO FORCE OTHER CHANNEL TO CARRY FULL LOAD. IF OTHER PWR SUPPLY HAS FAILED, OUTPUT WILL DECREASE TO REGULATION LEVEL OF PWR SUPPLY BEING TESTED

2 — CAPABLE OF MAINTAINING POWER FOR 2 MILLISECONDS IN EVENT OF LOSS OF PRIME POWER

1 — DESCRIBES DPS MDM SWITCH, POWER SOURCE, AND TM POINT CORRELATION. PWR AND CNTLS FOR OI MDM'S SHOWN ON DWG 17.1. FLEX MDM PWR AND CNTLS ARE MISSION DEPENDENT.

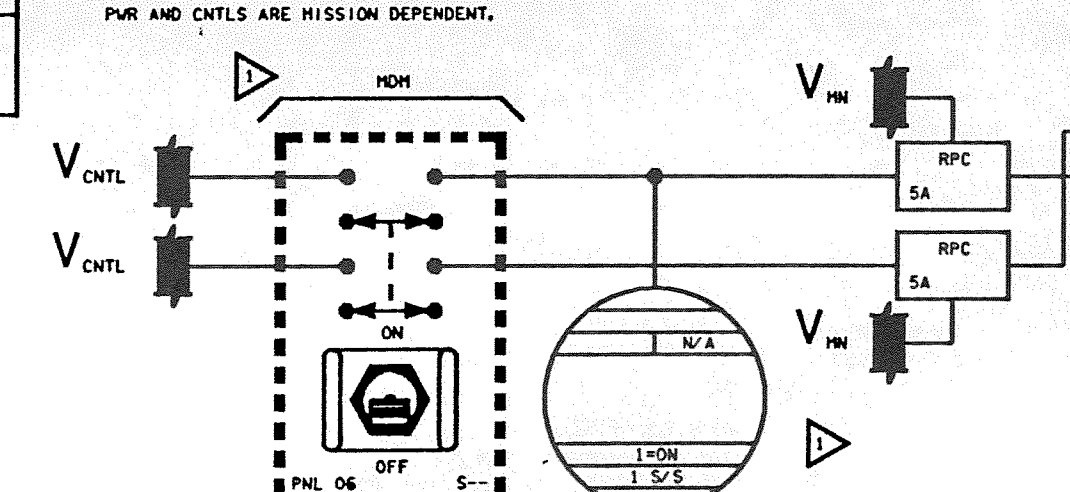

1 EMDM	PNL 06 SWITCH NAME	SW NO	PNL NO	EMDM POWER SUPPLY 1 POWER SOURCE V_{CNTL}	V_{MN} PCA	EMDM POWER SUPPLY 2 POWER SOURCE V_{CNTL}	V_{MN} PCA	HML NO	TLM SOURCE	HML NAME
FF 1	FF 1	S26	06	AB2	MNA FPC1	AB3	MNB FPC2	V72S7981E	OF 1	MDM FF 1 PWR SUPPLY NO 1-RPC
FF 2	FF 2	S27	06	BC2	MNB FPC2	BC3	MNC FPC3	V72S7983E	OF 2	MDM FF 2 PWR SUPPLY NO 1-RPC
FF 3	FF 3	S28	06	CA3	MNC FPC3	CA2	MNA FPC1	V72S7985E	OF 3	MDM FF 3 PWR SUPPLY NO 1-RPC
FF 4	FF 4	S29	06	BC1	MNB FPC2	BC3	MNC FPC3	V72S7987E	OF 2	MDM FF 4 PWR SUPPLY NO 1-RPC
FA 1	FA 1	S21	06	AB1	MNA APC4	AB2	MNB APC5	V72S7991E	OA 1	MDM FA 1 PWR SUPPLY NO 1 RPC
FA 2	FA 2	S22	06	BC1	MNB APC5	BC2	MNC APC6	V72S7993E	OA 2	MDM FA 2 PWR SUPPLY NO 1-RPC
FA 3	FA 3	S23	06	CA2	MNC APC6	CA1	MNA APC4	V72S7995E	OA 3	MDM FA 3 PWR SUPPLY NO 1-RPC
FA 4	FA 4	S24	06	CA3	MNC APC6	CA1	MNA APC4	V72S7997E	OA 3	MDM FA 4 PWR SUPPLY NO 1-RPC
PF 1	PL 1	S52	06	AB1	MNA FPC1	AB3	MNB FPC2	V72S7972E	OF 2	PL MDM PF 1 PWR SUPPLY NO 2-RPC
PF 2	PL 2	S20	06	BC1	MNB FPC2	BC3	MNC FPC3	V72S7973E	OF 2	PL MDM PF 2 PWR SUPPLY NO 1-RPC
LF 1				GSE	PREFLT 1	GSE	PREFLT 2	POWER AND CONTROLS FOR OI MDM'S ARE SHOWN ON DWG 17.1-1		
LA 1				GSE	PREFLT 1	GSE	PREFLT 2			
LL 1				MEC 1	MNA APC1	MEC 2	MNB APC2			
LL 2				MEC 1	MNA APC1	MEC 2	MNB APC2			
LR 1				MEC 1	MNA APC1	MEC 2	MNB APC2			
LR 2				MEC 1	MNA APC1	MEC 2	MNB APC2			
LM 1				GSE	PREFLT 1	GSE	PREFLT 2			

13 EMDM 1

NATIONAL AERONAUTICS AND SPACE ADMINISTRATION, LYNDON B. JOHNSON SPACE CENTER HOUSTON, TEXAS		SIGNATURE	DATE
ENHANCED MULTIPLEXER/ DEMULTIPLEXER		DSGN L. BUCHANAN	11-7-78
		DR L. BUCHANAN	11-7-78
		ENGR K. AKAGI	
		ENGR [signature]	5/15/96
		APP [signature]	5-15-96
DWG NO 8.13	SPACE SHUTTLE	APP H. S. [signature]	5-15-96
	ALL	CADS	
SHEET 1 OF 4 PAGE	126.5 X 34	LTR E	PCN 6

BASIC REV E-6

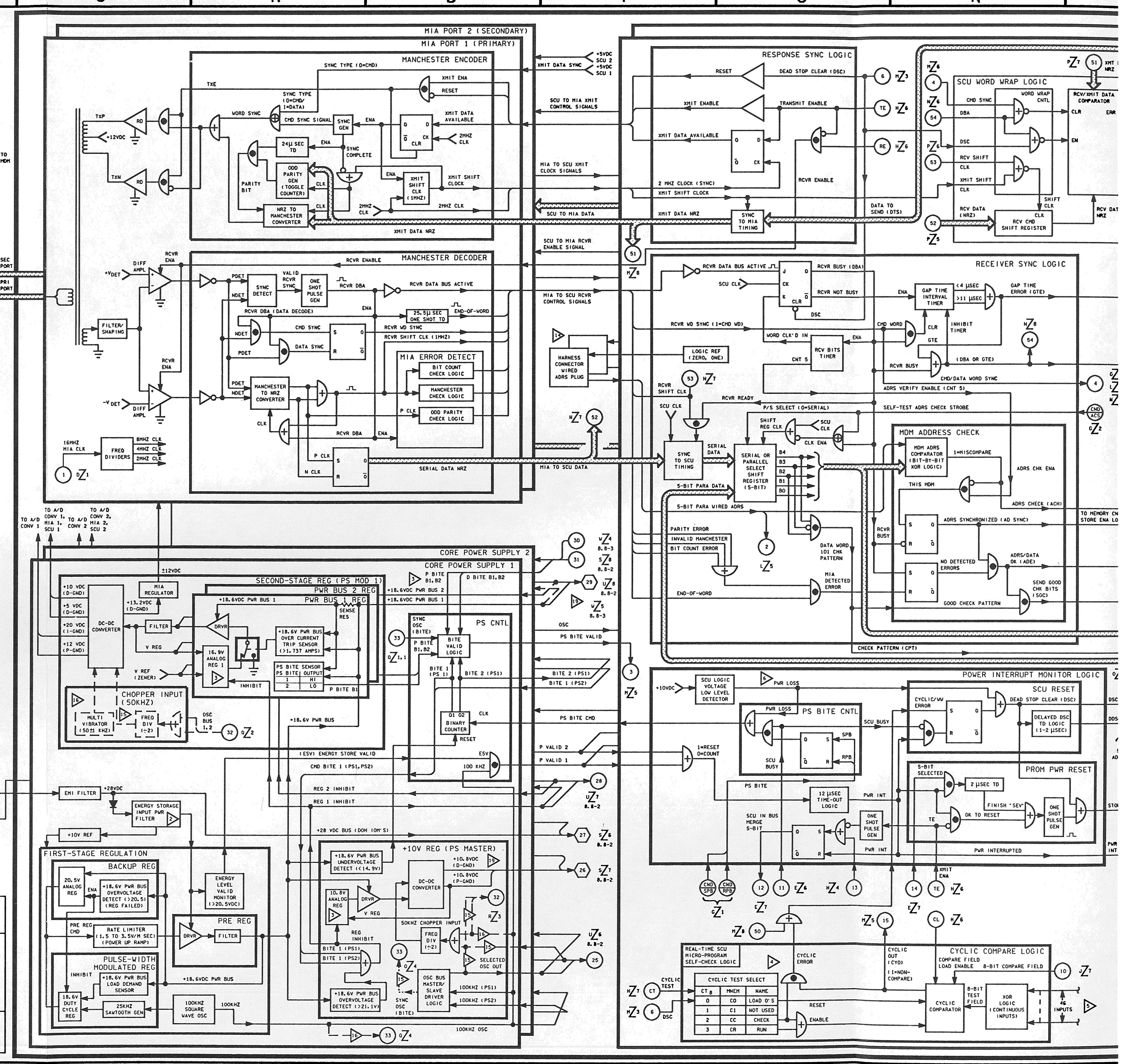

DATE: 02/19/92	NAME: JMB	VERSION: BPT.4
DATE: 03/04/92	NAME: LAM	VERSION: BPT.5
DATE: 03/09/92	NAME: MFB	VERSION: INK.1

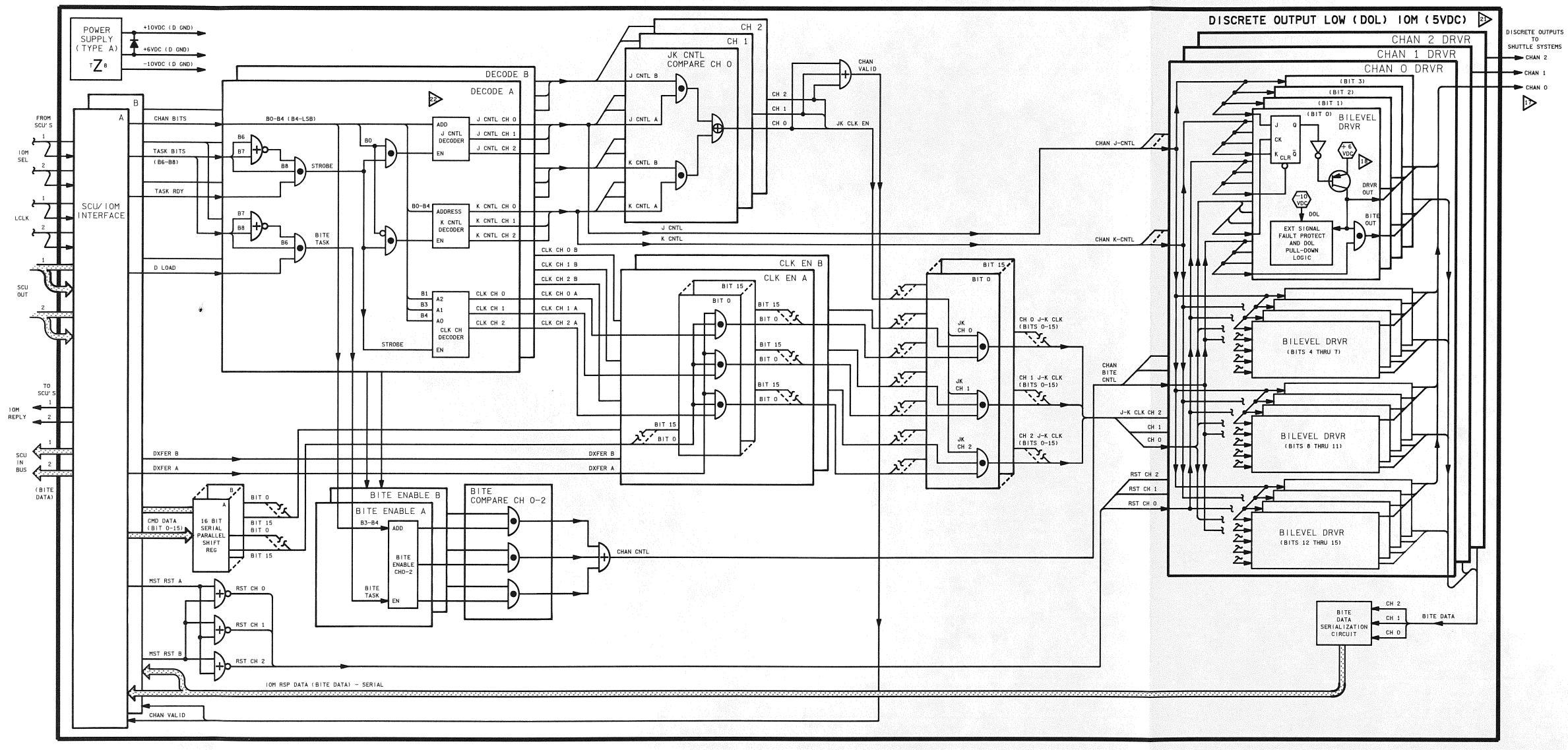

(22) SELECTED DISCRETES WITHIN A SPECIFIED CHANNEL MAY BE EITHER SET OR RESET SIMULTANEOUSLY, HOWEVER, DISCRETES CANNOT BE BOTH SET AND RESET DURING THE SAME OPERATION (TWO SEPARATE CMD DATA WORDS ARE REQUIRED). BIT 1 (B1) OF CHANNEL ADDRESS CONTROLS THE SET/RESET ACTION (SET=1, RESET=0)

(21) DOL AND DOH IOM CARDS HAVE 6 TRANSPARENT CHANNELS (CHANNELS ARE NOT CONNECTED TO OUTPUTS). THESE CHANNELS CAN BE ADDRESSED FOR BITE STATUS INFORMATION ON THE IOM (EMDM ONLY)

(20) EACH IOM POWER SUPPLY IS LOCATED ON THE IOM CARD ITSELF (EMDM ONLY)

(19) THE 100 KHZ OSCILLATOR BUS INPUTS AND FREQUENCY DIVIDER CIRCUIT ARE UNIQUE TO '5XXX' SERIES MDM'S. FREE RUNNING MULTI-VIBRATOR CIRCUIT DESIGN IS UNIQUE TO '6XXX' SERIES MDM'S. REF DWG 8.8 SHEET 1 NOTES 15 AND 16 FOR ADDITIONAL DETAIL

(18) DOL IOM DRIVER VOLTAGE = +6VDC
DOH IOM DRIVER VOLTAGE = +28VDC
THE -10VDC IS APPLICABLE ONLY TO THE DOL IOM (UTILIZED BY THE LOGIC ZERO PULL-DOWN CIRCUIT)

(17) DOL IOM GENERATED LOGIC 'ONE' STATE IS +5 ±1VDC. THE LOGIC 'ZERO' STATE IS 0 ±0.5VDC

(16) DIH IOM INPUT SIGNALS OF +28VDC INTERPRETED AS A LOGIC 'ONE', 28VDC PWR GROUND AS A LOGIC 'ZERO' (INPUTS ARE THRESHOLDED AGAINST A +8VDC REF)

(15) AID AND AIS IOM INPUT SIGNAL RANGE IS +5.11 TO -5.12VDC WITH A MAXIMUM FULL-SCALE DIFFERENTIAL VOLTAGE OF 5.12VDC (LARGER INPUTS INTERPRETED AS FULL SCALE). AFTER A/D CONVERSION, THE TOTAL ACCURACY OF THE DIGITAL VALUE IS WITHIN 1.0 PCT OF FULL SCALE (51 MV)

(14) FOR AID (CH 0-15) AND AIS (CH 0-31) IOM BITE TEST, TWO SEPARATE A/D CONVERTED RESPONSE DATA WORDS ARE SENT TO THE GPC:
RSP WORD 1 = ANALOG BITE VALUE = 1/2I INPUT SIG(+) (BITE REF)
RSP WORD 2 = NON-BITE VALUE = INPUT SIGNAL
IOM BITE REFERENCE VOLTAGE:
(+) = +2.0 VDC = BITE REF 1)
(-) = -2.0 VDC = BITE REF 2)

CH 0 (+)	CH 4 (-)	CH 8 (-)	CH 12 (+)	CH 16 (-)	CH 20 (+)	CH 24 (+)	CH 28 (-)
CH 1 (-)	CH 5 (+)	CH 9 (+)	CH 13 (-)	CH 17 (+)	CH 21 (-)	CH 25 (-)	CH 29 (+)
CH 2 (-)	CH 6 (+)	CH 10 (+)	CH 14 (-)	CH 18 (+)	CH 22 (-)	CH 26 (-)	CH 30 (+)
CH 3 (+)	CH 7 (-)	CH 11 (-)	CH 15 (+)	CH 19 (-)	CH 23 (+)	CH 27 (+)	CH 31 (-)

(13) DIL IOM INPUT SIGNALS OF +5VDC INTERPRETED AS A LOGIC 'ONE', 0VDC AS A LOGIC 'ZERO'. (INPUTS ARE THRESHOLDED AGAINST A +2.25VDC REF)

(12) CHAN BITS (CHANNEL ADDRESS) LATCHED VIA 'CHAN RDY' TIMING SIGNAL AFTER FIFTH SERIAL DATA BIT CLOCKED TO OUTPUT OF SHIFT REGISTER. TASK BITS (IOM TASK) SIMILARLY LATCHED VIA 'TASK RDY' SIGNAL AFTER EIGHTH SERIAL DATA BIT

(11) SIGNAL 'INPUT' CONNECTION (BUS CNTL HYBRID) IS A FUNCTION OF THE IOM TYPE:
DOL, DOH, AOD, SIO, TAC, DIL, DIH, AID, AIS → SIGNAL 'TASK RDY' SIGNAL GROUND (LOGIC ZERO) (THIS FORCES SIGNAL 'I/O CNTL' ALWAYS TO LOGIC 'ONE' STATE)
SIGNAL 'SER IOM' CONNECTION (BUS CNTL HYBRID) IS A FUNCTION OF THE IOM TYPE:
SIO, TAC → +10VDC (LOGIC ONE)
ALL OTHERS → SIGNAL GROUND (LOGIC ZERO) (THIS DISABLES LOGIC GATE)

(10) THE SRB MDM DOL IOM (DWG 8.8, SHT 3) DOES NOT ROUTE THE SIGNAL 'RESET' TO THE BUS RCVR MODULE, AND THUS, CANNOT RESPOND TO IOM RESET CMDS FROM THE SCU

(9) PARALLEL DATA LINES ROUTE 'CMD DATA' (BITS B9-B24) TO THE FOLLOWING IOM TYPES ONLY:
AOD (12 BITS) DOL (16 BITS) SIO (16 BITS)

(8) IF BOTH 'IOM SEL' 1&2 ARE ENABLED, ALL I/O CARD CMDS WILL BE 'LOCKED OUT' UNTIL THE FAILED 'IOM SEL' DISCRETE IS RESET (PROBABLY VIA MDM PWR CYCLE)

(7) SIGNAL 'I/O CNTL' CONTROLS INITIALIZATION OF TIMER NO 2 WHICH, IN TURN, CONTROLS ALL SUBSEQUENT IOM TIMING AND CONTROL SIGNALS FOR PRESENT SCU CMD

(6) IOM SIGNAL 'CLK' IS USED EXTENSIVELY (BUT NOT SHOWN) IN EVERY MODULE TO CLOCK D-TYPE AND J-K TYPE FLIP FLOPS, SHIFT REGISTERS, AND COUNTERS

(5) THE -28VDC (USED ONLY BY DOH IOM'S) DOES NOT HAVE ENERGY STORAGE ASSOCIATED WITH IT, AND THEREFORE, WILL NOT TOLERATE A 2-MILLI SEC DROPOUT

(4) DURING PS BITE TESTS, REGULATORS ARE 'INHIBITED' (BY REDUCING REGULATION VALUE ABOUT 2-3 PCT) IN ORDER TO FORCE OTHER REGULATOR TO CARRY FULL LOAD. IF OTHER REG HAS FAILED, OUTPUT WILL DECREASE TO REGULATION LEVEL OF PWR SUPPLY BEING TESTED

(3) POWER SUPPLIES 'TYPE A' AND DOH IOM 'TYPE B' UTILIZE CURRENT OVERLOAD PROTECTION LOGIC TO PROVIDE FAULT ISOLATION (CORE PWR SUPPLY PROTECTION). IF OVERLOAD TRIP CURRENT VALUE (TYPICALLY, APPROXIMATELY TEN TIMES MAX BITE VALUE) IS EXCEEDED, TRIP LOGIC CAN BE RESET ONLY BY CYCLING THE MDM POWER SWITCH (PNL O6)

(2) FOR DIL AND DIH IOM BITE TEST, INPUT DISCRETES ARE BYPASSED. INSTEAD, SPECIFIC BITS ARE SET/RESET VIA SELECTION OF BITE TEST 1 OR 2:

	BITE TEST 1			BITE TEST 2		
BITS	CH 0	CH 1	CH 2	CH 0	CH 1	CH 2
0-3	RESET	RESET	SET	SET	SET	RESET
4-7	SET	SET	RESET	RESET	RESET	SET
8-11	SET	RESET	SET	RESET	SET	RESET
12-15	RESET	SET	RESET	SET	RESET	SET

NOTES: (1) AOD IOM UTILIZES ONLY FIRST 12 BITS (NOMINALLY, ONLY FIRST TEN BITS CONTAIN DATA)

13 EMDM 2

SIGNATURE		DATE	NATIONAL AERONAUTICS AND SPACE ADMINISTRATION LYNDON B. JOHNSON SPACE CENTER HOUSTON, TEXAS
DSGN	PAT SHERRILL		
DR			
ENGR	KATHY AKAGI		ENHANCED MULTIPLEXER/ DEMULTIPLEXER
ENGR	Kathy Akagi	3-17-92	
APP	Bruce B. Murphy	3-17-92	
APP			SPACE SHUTTLE / DWG NO 8.13
OMNIPLAN	S.A. Limbaker	4.28.92	ALL
LTR E	PCN 2		121 X 34 / PAGE / SHEET 2 OF 4

BASIC REV E-2

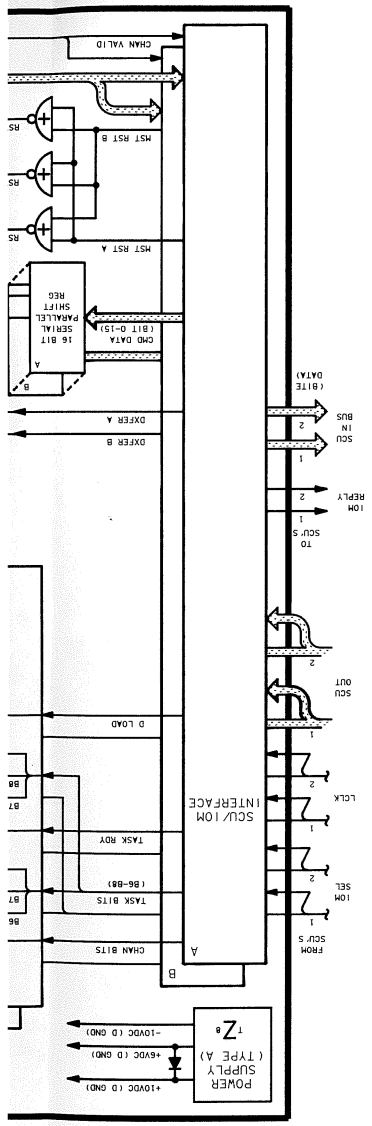
CHAN VALID
MST RST B
MST RST A
16 BIT SERIAL PARALLEL SHIFT REG
CMD DATA (BIT 0-15)
DXFER B
DXFER A
SCU/IOM INTERFACE
TASK RDY
CHAN BITS
SCU SEL
IOM SCU'S
FROM SCU'S
TO SCU'S
SCU BUS IN
SCU BUS OUT
IOM REPLY
CH 2 RCVR
D LOAD
A
B
POWER SUPPLY (TYPE A)
+5VDC (O GND)
+10VDC (O GND)
-10VDC (O GND)

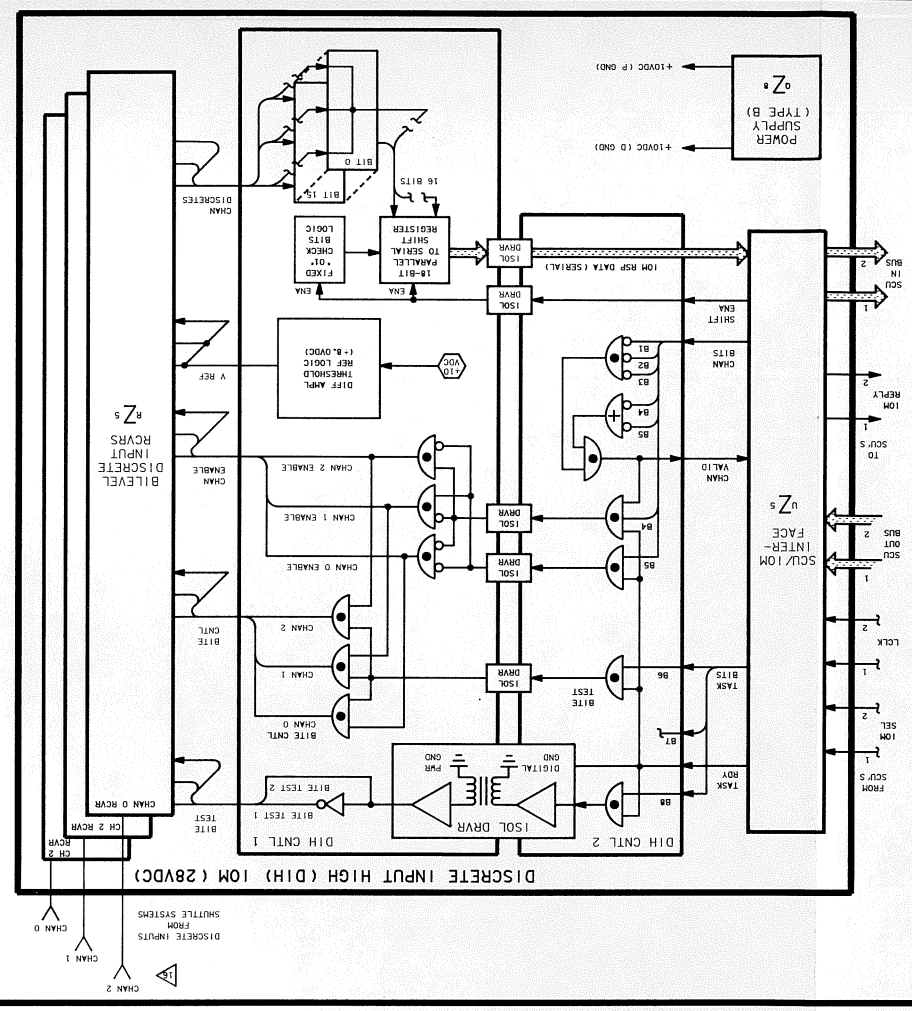
DISCRETE INPUT HIGH (DIH) IOM (28VDC)
SCU/IOM INTER-FACE
BILEVEL DISCRETE INPUT RCVRS
POWER SUPPLY (TYPE B)
+10VDC (P GND)
+10VDC (O GND)
16 BITS
BIT 15
BIT 0
18-BIT PARALLEL TO SERIAL SHIFT REGISTER
FIXED "01" CHECK BITS
DIFF AMPL THRESHOLD REF LOGIC (+8.0VDC)
ISOL DRVR
10M MSP DATA (SERIAL)
CHAN DISCRETES
CHAN ENABLE
CHAN 2 ENABLE
CHAN 1 ENABLE
CHAN 0 ENABLE
CHAN 2
CHAN 1
CHAN 0 RCVR
V REF
BITE CNTL
BITE TEST 2
BITE TEST 1
DIGITAL GND
PWR GND
ISOL DRVR
DIH CNTL 2
DIH CNTL 1
TASK RDY
BITE TEST
TASK BITS
CHAN VALID
CHAN BITS
SCU BUS OUT
SCU BUS IN
IOM SCU'S
FROM SCU'S
TO SCU'S
IOM REPLY
IOM SEL
IOM CLCK
SHUTTLE SYSTEMS
DISCRETE INPUTS FROM SHUTTLE SYSTEMS
CHAN 0
CHAN 1
CHAN 2

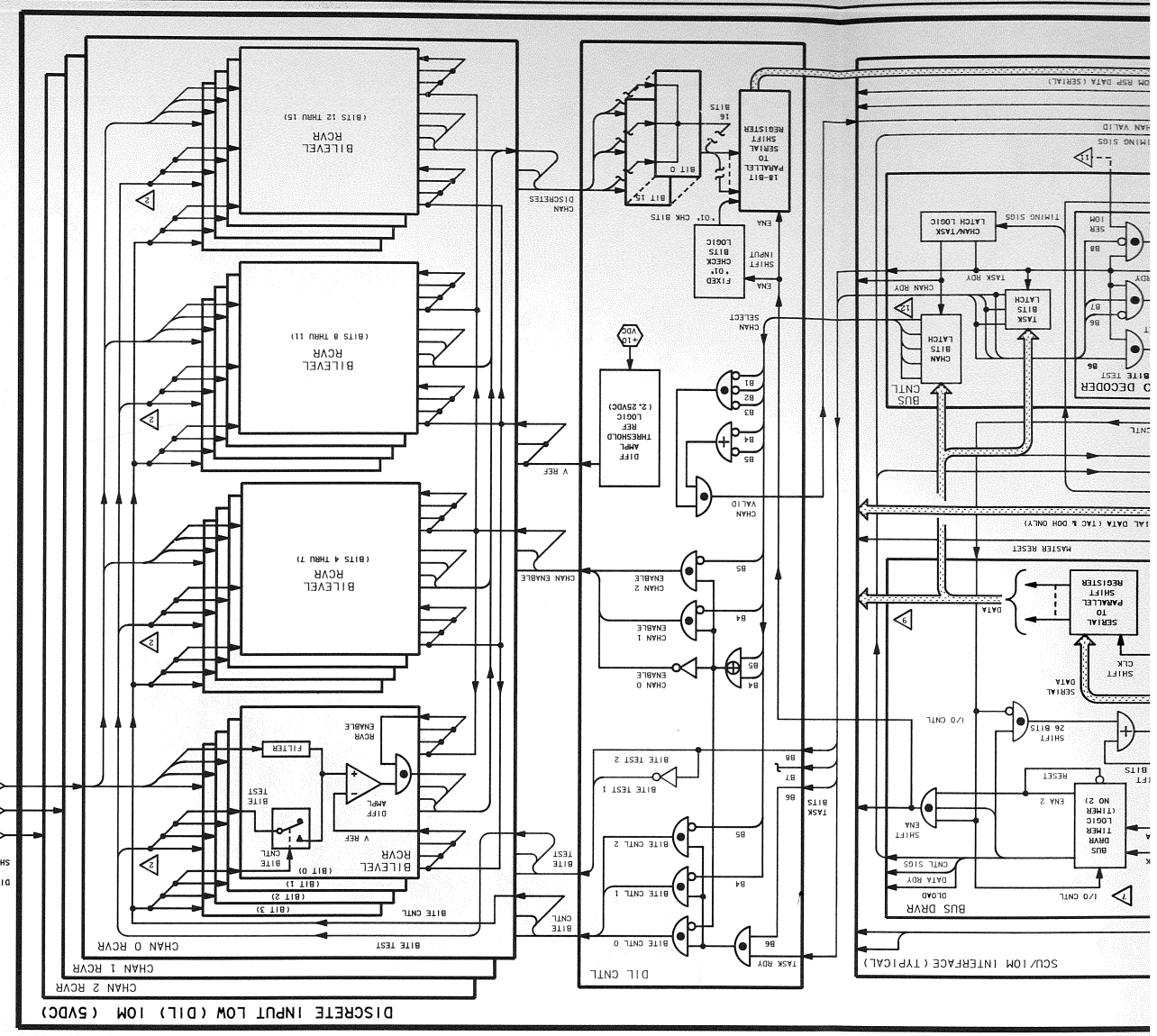
DISCRETE INPUT LOW (DIL) IOM (5VDC)
SCU/IOM INTERFACE (TYPICAL)
BILEVEL RCVR
(BITS 12 THRU 15)
(BITS 8 THRU 11)
(BITS 4 THRU 7)
(BITS 0 THRU 3)
DIFF AMPL THRESHOLD REF LOGIC (2.25VDC)
CHAN DISCRETES
CHAN ENABLE
CHAN SELECT
CHAN VALID
CHAN BITS
V REF
FILTER
DIL CNTL
BUS DRVR
CHAN 0 RCVR
CHAN 1 RCVR
CHAN 2 RCVR
DISCRETE INPUTS FROM SHUTTLE SYSTEMS
CHAN 0
CHAN 1
CHAN 2
18-BIT PARALLEL TO SERIAL SHIFT REGISTER
FIXED "01" CHK BITS
SHIFT INPUT
10M MSP DATA (SERIAL)
CHAN/TASK LATCH LOGIC
TIMING SIGS
CHAN RDY
TASK RDY
BITE TEST
BITE CNTL
SERIAL TO PARALLEL REGISTER
SERIAL DATA
SHIFT CLK
I/O CNTL
MASTER RESET
BUS DRVR
DLOAD
DATA RDY
CNTL SIGS
SHIFT 26 BITS
RESET
ENA 2
ENA 1
TIMER NO 2)
(TYPICAL)
PS BITE SENSOR OUTPUT
PS BITE SENSOR
OVERLOAD TRIP
CURRENT LIMITER SENSOR
ANALOG VOLTAGE REGULATOR
CHOPPER INPUT (50KHZ)
DC - DC CONVERTER
DC OUTPUTS
OSC BUS 1
OSC BUS 2
V REG/OL TRIP 1
V REG/OL TRIP 2
PS BITE B1,B2
PS TYPE A
PS TYPE B
TYPE B1 DIL DIH DOH
FROM POWER SUPPLIES
TO OTHER TYPE B POWER SUPPLIES
+28VDC
+10.0VDC (POWER GND)
+10.0VDC (DIGITAL GND)
+15VDC (POWER GND)
+15VDC (DIGITAL GND)
LIMITER P1
LIMITER P2
LIMITER D1
LIMITER D2
OL TRIP P1 (PWR GND)
OL TRIP P2
V REG
R SENSE

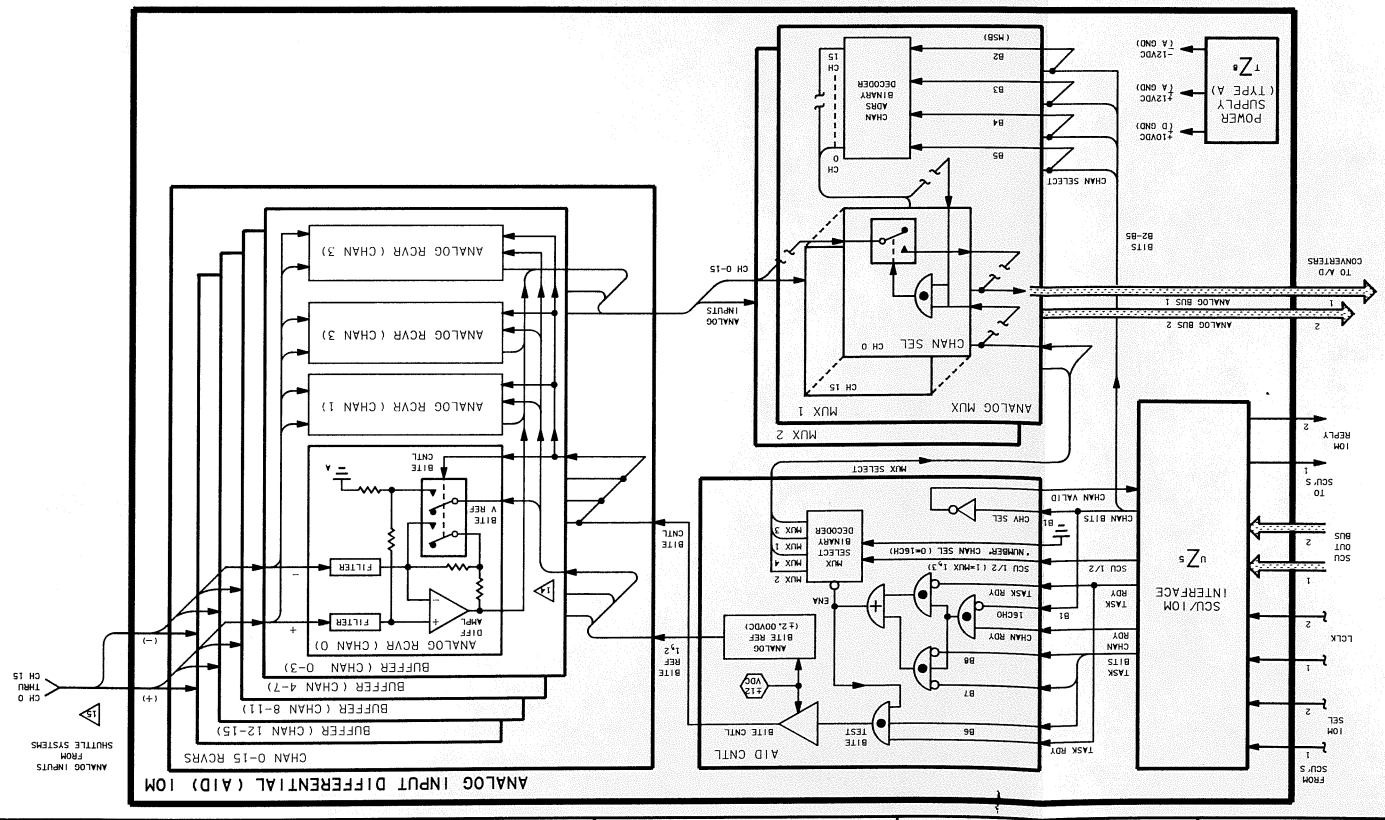
ANALOG INPUT DIFFERENTIAL (AID) IOM
CHAN 0-15 RCVRS
BUFFER (CHAN 12-15)
BUFFER (CHAN 8-11)
BUFFER (CHAN 4-7)
BUFFER (CHAN 0-3)
ANALOG RCVR (CHAN 3)
ANALOG RCVR (CHAN 3)
ANALOG RCVR (CHAN 1)
ANALOG RCVR (CHAN 0)
DIFF AMPL
FILTER
BITE V REF
BITE CNTL
CHAN 0-15
ANALOG INPUTS FROM SHUTTLE SYSTEMS
ANALOG BUS 1
ANALOG BUS 2
TO A/D CONVERTERS
ANALOG MUX
MUX 1
MUX 2
CHAN SEL
CHAN ADDR BINARY DECODER
CHAN SELECT
BITS B2-B5
POWER SUPPLY (TYPE A)
-12VDC
+12VDC
+10VDC
AID CNTL
SCU/IOM INTERFACE
SCU 1/2
TASK RDY
TASK BITS
CHAN RDY
CHAN BITS
IOM SCU'S
IOM SEL
IOM CLCK
IOM REPLY
SCU BUS OUT
SCU BUS IN
FROM SCU'S
TO SCU'S
BITE TEST
BITE CNTL
BITE REF
BITE TEST 1
BITE TEST 2
ANALOG GND
+2.00VDC
+5VDC
VDC
TASK RDY
TECHO
MUX SELECT
"NUMBER" CHAN SEL (0-15CH)
MUX BINARY SELECT DECODER
MUX 1
MUX 2
MUX 3
MUX 4
CHAN VALID
CHAN BITS
CHAN SEL
CH 0-15
CH 0
CH 15
(MSB)
(LSB)
B2
B3
B4
B5
B6
B7
B8
B1

DATE: 03/09/92 | NAME: MFB | VERSION: INK= 1

V U T S R Q P O N

8 7 6 5 4 3 2 1

IOM TASK:
000 - RSP DATA REQUEST (INPUT IOM'S)
001 - CMD DATA TRANSFER (OUTPUT IOM'S)
01X - RESET IOM
1X0 - BITE TEST 1
1X1 - BITE TEST 2
CHECK BITS:
01 - EXECUTE CMD
OTHER - ILLEGAL CODE (TERMINATES CMD)

INPUT IOM CMD FORMAT (FROM SCU)

CHAN ADRS	IOM TASK	CHECK BITS
B1 B2 B3 B4 B5 B6 B7 B8 B9 B10		

OUTPUT IOM CMD FORMATS (FROM SCU)

CHAN ADRS	IOM TASK	16 DATA BITS	CHECK BITS
B1 B2 B3 B4 B5 B6 B7 B8 B9		B24 B25 B26	

CHAN ADRS	IOM TASK	CHECK BITS
B1 B2 B3 B4 B5 B6 B7 B8 B9 B10		

IOM RESPONSE DATA WORD FORMAT (TO SCU)

16 DATA BITS	CHECK BITS
B1 B2 B3 B4 B5	B15 B16 B17 B18

PS TYPE A:
A1S
A1D
A0D
D0L
S1O
TAC

PS 'TYPE A' (TYPICAL)

PS TYPE B:
D1L
D1H
D0H

PS 'TYPE B' (TYPICAL)

SCU/IOM INTERFACE (TYPICAL)

DISCRETE INPUT LOW (DIL) IOM (5VDC)

DIH CNTL

BASIC REV E-2

DATE: 02/05/92	NAME: BJT	VERSION: BPT.1
DATE: 02/19/92	NAME: JMB	VERSION: BPT.2
DATE: 2-08-93	NAME: SKK	VERSION: INK.1

AIS) IOM
VRS

ANALOG INPUTS FROM SHUTTLE SYSTEMS
CH 0 THRU CH 31

DISCRETE OUTPUT HIGH (DOH) IOM (28VDC)

IOM SEL FROM SCU'S
LCLK FROM SCU'S
SCU OUT BUS
IOM REPLY TO SCU'S
SCU IN BUS TO SCU'S
(BITE DATA)

BUS ISOLATION CIRCUIT

IOM SEL 2
IOM SEL 1
LCLK 2
LCLK 1
SCU OUT 2
SCU OUT 1

SCU/IOM INTERFACE U75 8.13-2

CHAN BITS
TASK BITS
TASK RDY
DLOAD
DXFER B
DXFER A
BITE TASK
83-84

DECODE H76 8.13-2

J CNTL B
J CNTL A
K CNTL B
K CNTL A
CH 2
CH 1
CH 0
J-K CNTL COMPARE G76 8.13-2
CHAN VALID
J CNTL
K CNTL

CLK CH0-2 B
CLK CH0-2 A
CLK CH 0 (BITS 0-15)
CLK CH 1 (BITS 0-15)
CLK CH 2 (BITS 0-15)
CLK EN COMPARE G74 8.13-2

JK CLK EN
BIT 15
BIT 0
CH 0 J-K CLK (BITS 0-15)
CH 1 J-K CLK (BITS 0-15)
CH 2 J-K CLK (BITS 0-15)
CHAN/BIT CLK (BITS 0-15) F74 8.13-2

CMD DATA (BIT 0-15)
16 BIT SERIAL PARALLEL SHIFT REGISTER

MST RST B
MST RST A

BITE ENABLE H73 8.13-2
BITE COMPARE CH0-2 H73 8.13-2
CHAN CNTL

CHANNEL DRIVER U75 8.13-2
CH 2
CH 1
J-K CLK CH 0
RST CH 2
RST CH 1
RST CH 0
CHAN BITE CNTL

BITE DATA SERIAL CIRCUIT
BITE DATA

DISCRETE OUTPUTS TO SHUTTLE SYSTEMS
CHAN 2
CHAN 1
CHAN 0

IOM RSP DATA (BITE DATA) - SERIAL
CHAN VALID

POWER SUPPLY (TYPE B1) G78 8.13-2
+10VDC (D GND)
+10VDC (P GND)
+28VDC (P GND)

ANALOG OUTPUTS TO SHUTTLE SYSTEMS
HI
LO
CH 0 THRU CH 15

(1) SELECTED DISCRETES WITHIN A SPECIFIED CHANNEL MAY BE EITHER SET OR RESET SIMULTANEOUSLY. HOWEVER, DISCRETES CANNOT BE BOTH SET AND RESET DURING THE SAME OPERATION. TWO SEPARATE CMD DATA WORDS ARE REQUIRED. BIT 1 (B1) OF THE CHANNEL ADDRESS CONTROLS THE SET/RESET ACTION. (SET=1, RESET=0)

(2) DOL AND DOH IOM CARDS HAVE 8 TRANSPARENT CHANNELS (CHANNELS ARE NOT CONNECTED TO OUTPUTS). THESE CHANNELS CAN BE ADDRESSED FOR BITE STATUS INFORMATION ON THE IOM (EMDM ONLY)

(3) THE DOH GENERATED LOGIC 'ONE' STATE IS ~28VDC; THE LOGIC 'ZERO' STATE IS 28VDC PWR GROUND

(4) AUTOMATIC COMPENSATION OF INTERNAL AMPLIFIER GAINS PERMITS THE AOD IOM OUTPUT DRIVERS TO MAINTAIN A FULL-SCALE OUTPUT DIFFERENTIAL VOLTAGE OF 5.12VDC, EITHER OUTPUT SIGNAL MAY BE SHORTED TO GROUND
SINGLE-ENDED OUTPUT: GAIN K=0.8
DOUBLE-ENDED-OUTPUT: GAIN K=0.4

(5) AOD DRIVER SIGNAL RANGE IS +5.11 TO -5.12VDC WITH A FULL SCALE DIFFERENTIAL VOLTAGE OF 5.12VDC. WITH DOUBLE-ENDED OUTPUT, SIGNAL WILL RANGE FROM +2.56 TO -2.56VDC
SIGNALS ARE GENERATED TO WITHIN AN ACCURACY OF 0.5 PCT OF FULL-SCALE (25 MV). D/A CONVERSION BEGINS APPROX 37.5μ SEC FROM RECEIPT OF THE CMD DATA WORD BY THE MDM. VOLTAGE SLEW TO THE DESIRED VALUE IS ACHIEVED WITHIN 30μ SEC THEREAFTER. SIGNAL WILL BE MAINTAINED AT THIS COMMANDED VALUE UNTIL RECEIPT OF A NEW CMD

(6) RESET NO 1 CLEARS CH 6 THRU 9
RESET NO 2 CLEARS CH 10 THRU 13
RESET NO 3 CLEARS CH 14,15 AND 0,1
RESET NO 4 CLEARS CH 2 THRU 5

(7) ON THE AIS IOM, ALL MINUS (-) INPUT LEAD CONNECTIONS ARE INTERNALLY GROUNDED. THUS, INPUTS AUTOMATICALLY REFERENCED TO ANALOG GROUND AND MAY BE POSITIVE OR NEGATIVE VOLTAGES WITH RESPECT TO GROUND

(8) AID AND AIS IOM INPUT SIGNAL RANGE IS +5.11 TO -5.12VDC WITH A MAXIMUM FULL-SCALE DIFFERENTIAL VOLTAGE OF 5.12VDC (LARGER INPUTS INTERPRETED AS FULL SCALE). AFTER A/D CONVERSION, THE TOTAL ACCURACY OF THE DIGITAL VALUE IS WITHIN 1.0 PCT OF FULL SCALE (51 MV)

NOTES: (9) FOR AID (CH 0-15) AND AIS (CH 0-31) IOM BITE TEST, TWO SEPARATE A/D CONVERTED RESPONSE DATA WORDS ARE SENT TO THE GPC:
RSP WORD 1 = ANALOG BITE VALUE = 1/2(INPUT SIG)+ (BITE REF)
RSP WORD 2 = NON-BITE VALUE = INPUT SIGNAL
IOM BITE REFERENCE VOLTAGES:
('+' = +2.0 VDC = BITE REF 1)
('-' = -2.0 VDC = BITE REF 2)

CH 0 +	CH 4 −	CH 8 −	CH 12 +	CH 16 −	CH 20 +	CH 24 +	CH 28 +
CH 1 −	CH 5 +	CH 9 +	CH 13 −	CH 17 +	CH 21 −	CH 25 −	CH 29 +
CH 2 −	CH 6 +	CH 10 +	CH 14 −	CH 18 +	CH 22 −	CH 26 −	CH 30 +
CH 3 +	CH 7 −	CH 11 −	CH 15 +	CH 19 −	CH 23 +	CH 27 +	CH 31 −

13 EMDM 3

SIGNATURE		DATE	NATIONAL AERONAUTICS AND SPACE ADMINISTRATION LYNDON B. JOHNSON SPACE CENTER HOUSTON, TEXAS
DSGN PAT SHERRILL			
DR			ENHANCED MULTIPLEXER/ DEMULTIPLEXER
ENGR KATHY AKAGI			
ENGR		2-9-93	
APP			
APP			SPACE SHUTTLE DWG NO 8.13
OMNIPLAN			ALL
LTR E	PCN 2		82.5 X 34 PAGE SHEET 3 OF 4

BASIC REV E-2

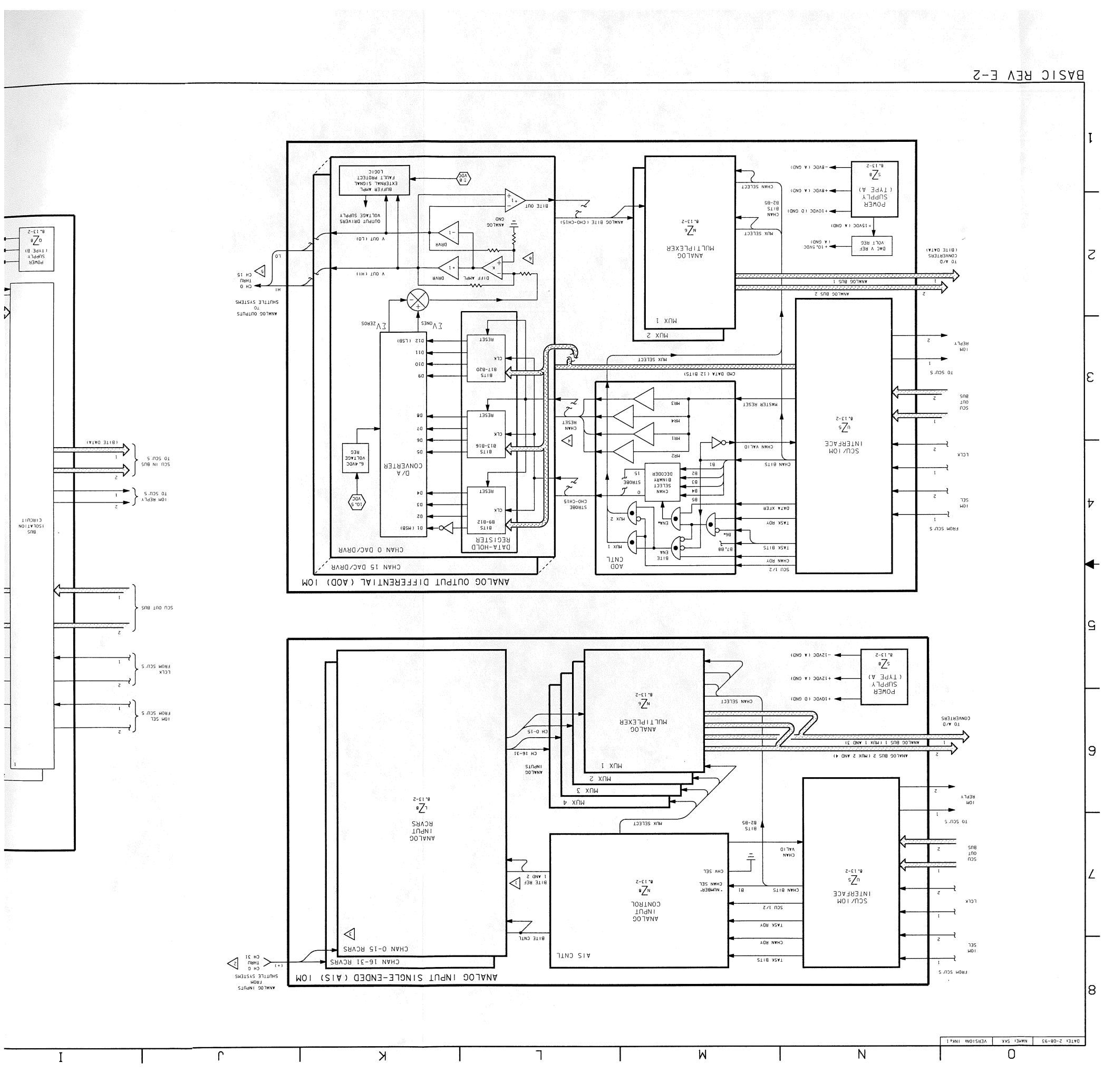
ANALOG OUTPUT DIFFERENTIAL (AOD) IOM
CHAN 15 DAC/DRVR
CHAN 0 DAC/DRVR
DATA-HOLD REGISTER
D/A CONVERTER
AOD CNTL
MUX 1
MUX 2
ANALOG MULTIPLEXER
SCU/IOM INTERFACE
POWER SUPPLY (TYPE A)
DAC V REF VOLT REG
ANALOG BUS 1
ANALOG BUS 2
TO A/D CONVERTERS
ANALOG OUTPUTS TO SHUTTLE SYSTEMS
ANALOG INPUTS FROM SHUTTLE SYSTEMS
ANALOG INPUT SINGLE-ENDED (AIS) IOM
CHAN 0-15 RCVRS
CHAN 16-31 RCVRS
AIS CNTL
ANALOG INPUT CONTROL
ANALOG INPUT RCVRS
MUX 3
MUX 4
BUS ISOLATION CIRCUIT
SCU OUT BUS
SCU IN BUS
IOM REPLY
IOM SEL
LCLK
FROM SCU'S
TO SCU'S

DATE= 10/21/91	NAME= JDF	VERSION= INR=5
DATE= 01/15/92	NAME= BJT	VERSION= BPT=1
DATE= 02-07-93	NAME= SAK	VERSION= INR=1

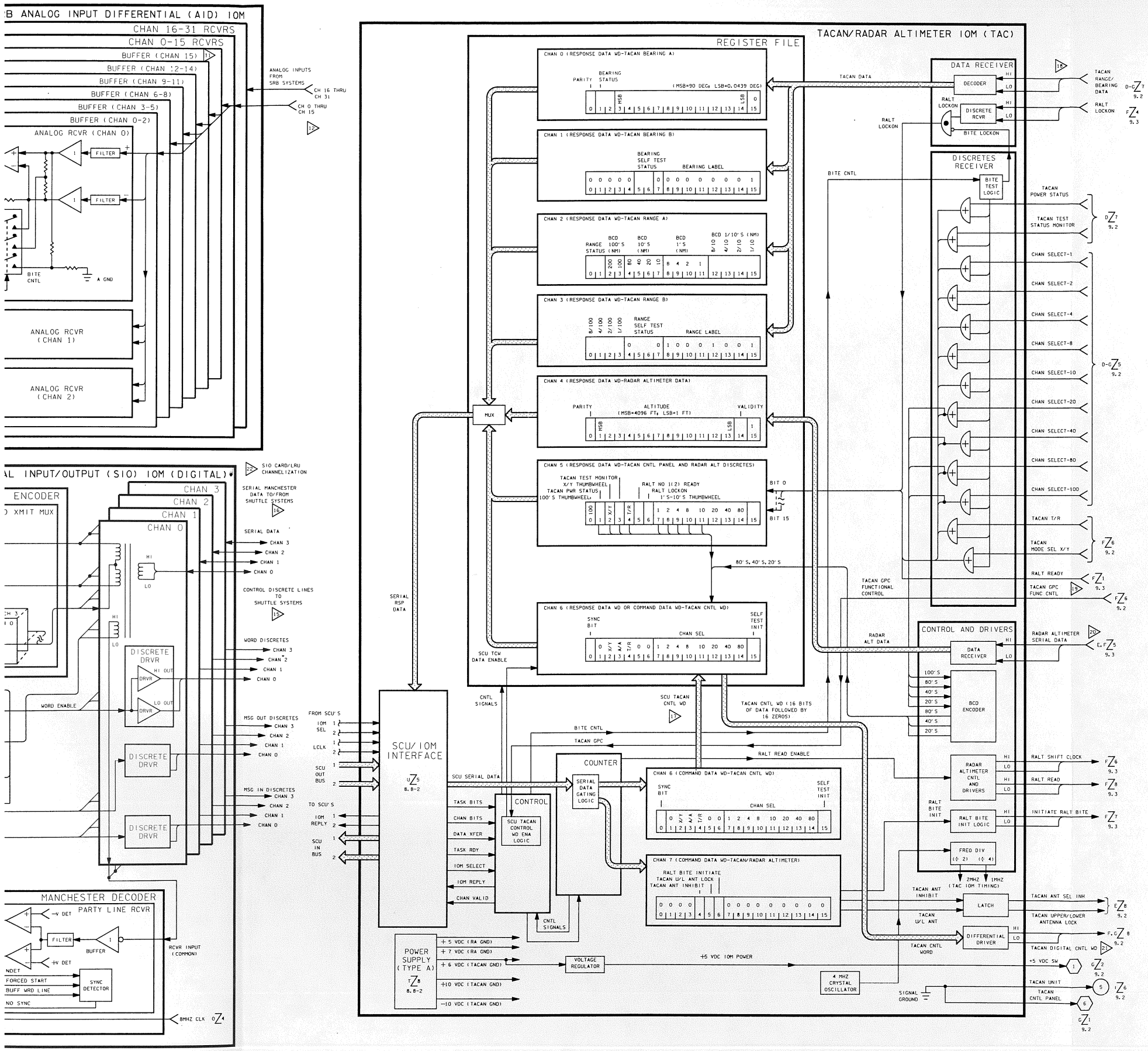

12 SIO IOM BITE IS PREVENTED FROM BEING DETECTED BY THE SHUTTLE SUBSYSTEMS SINCE THE CONTROL DISCRETES 'WORD', 'MESSAGE IN', AND 'MESSAGE OUT' ARE NOT ENABLED DURING SIO BITE TEST

13 SIO IOM BITE TEST PATTERN CONSISTS OF ALTERNATING ONE'S AND ZERO'S

BITE TEST	16-BIT RSP DATA FIELD
NO. 1	0 1 0 1 0 1 0 1 0 1 0 1 0 1 0 1
NO. 2	1 0 1 0 1 0 1 0 1 0 1 0 1 0 1 0

14 SRB AID IOM INPUT SIGNAL RANGE IS +5.11 TO −5.12 VDC WITH A MAXIMUM FULL-SCALE DIFFERENTIAL VOLTAGE OF 5.12 VDC (LARGER INPUTS INTERPRETED AS FULL SCALE)

AFTER A/D CONVERSION, THE TOTAL ACCURACY OF THE DIGITAL VALUE IS WITHIN 0.5 PCT OF FULL SCALE (.25 MV)

NOTE THAT SRB AID IOM ACCEPTS UP TO 32 DIFFERENTIAL INPUT CHANNELS RATHER THAN 16 AS IN THE CASE OF THE ORBITER AID IOM

15 SRB AID IOM'S CONSIST OF THREE ANALOG RECEIVERS PER BUFFER, THE CHAN 15 AND CHAN 31 ANALOG RECEIVERS ARE PHYSICALLY LOCATED ON THE SAME BUFFER MODULE

16 FOR SRB AID IOM BITE TEST, TWO SEPARATE A/D CONVERTED RESPONSE DATA WORDS ARE SENT TO THE GPC:
RSP WORD 1 = ANALOG BITE VALUE = 1/2 (INPUT SIG) + (BITE REF)
RSP WORD 2 = NON-BITE VALUE = INPUT SIGNAL
SRB AID IOM BITE REFERENCE VOLTAGE:
(-)= + 2.0 VDC = BITE REF 1)
(-)= − 2.0 VDC = BITE REF 2)

CH 0 + | CH 4 − | CH 8 − | CH 12 + | CH 16 − | CH 20 + | CH 24 + | CH 28 −
CH 1 − | CH 5 + | CH 9 + | CH 13 − | CH 17 + | CH 21 − | CH 25 − | CH 29 +
CH 2 − | CH 6 + | CH 10 + | CH 14 − | CH 18 + | CH 22 − | CH 26 − | CH 30 +
CH 3 + | CH 7 − | CH 11 − | CH 15 + | CH 19 − | CH 23 + | CH 27 + | CH 31 −

17 SRB AID IOM 'AID CNTL' FUNCTIONALLY IDENTICAL TO ORBITER 'AIS CNTL' EXCEPT THAT REFERENCE VOLTAGE TO BITE TEST DRIVE LOGIC IS 15± VDC RATHER THAN ±12 VDC

18 DIH IOM INPUT SIGNALS OF +28 VDC INTERPRETED AS A LOGIC 'ONE', 28 VDC PWR GROUND AS A LOGIC 'ZERO' (INPUTS ARE THRESHOLDED AGAINST A +8 VDC REF)

19 DOL IOM GENERATED LOGIC 'ONE' STATE IS +5 ±1 VDC, THE LOGIC 'ZERO' STATE IS 0 ± 0.5 VDC

20 SELECTED DISCRETES WITHIN A SPECIFIED CHANNEL MAY BE EITHER SET OR RESET SIMULTANEOUSLY, HOWEVER, DISCRETES CANNOT BE BOTH SET AND RESET DURING THE SAME OPERATION (TWO SEPARATE CMD DATA WORDS ARE REQUIRED, BIT 1 (B1) OF THE CHANNEL ADDRESS CONTROLS THE SET/RESET ACTION (1=SET, 0=RESET)

21 THE SRB DOL IOM POSSESSES UNIQUE LOGIC TO PROTECT AGAINST (OR LOCK OUT) CMDS TO THE IOM IN THE EVENT OF GPC OR IOM FAILURES AFTER LAUNCH (SPECIFICALLY PROTECTED ARE APU POWER ON/OFF DISCRETES AND RATE GYRO ON/OFF DISCRETES). NOMINALLY, AT ~T-37 SEC (LL1 & LR1) AND ~T-13 SEC (LL2 & LR2), A CMD IS SENT TO SET THE CHANNEL LOCKOUT LOGIC (ANY NON-BITE CMD WORD WITH A CHAN 7 ADDRESS). NOTE THAT THE GPC SOFTWARE DOES NOT SEND OUTPUT COMMANDS TO THE SRB MDM'S AFTER LAUNCH

THE DOL CMD LOCKOUT LOGIC CAN BE RESET (FOR PRE-LAUNCH OPERATIONS) ONLY BY THE FOLLOWING SEQUENCE:

THE RESET SEQUENCE IS INITIATED VIA A NON-BITE CMD WORD WITH A CHAN 27 ADRS AND A CMD DATA FIELD (BITS B9-B24) OF ALL LOGIC ZEROS (THIS ENABLES DUAL TIME-DELAY TIMER). ALL OTHER COMMANDS ARE IGNORED (TIMER IS HELD RESET)

A SECOND COMMAND IDENTICAL TO THE FIRST MUST THEN BE SENT BETWEEN 600 TO 800 MILLISECONDS AFTER THE FIRST CMD IN ORDER TO CLEAR THE CMD LOCKOUT LOGIC (GUARANTEED 200 MILLISEC WINDOW)

IF THE SECOND CMD IS SENT PRIOR TO ~400 MSEC, THE TIMER IS RESET AND THE ENTIRE UNLOCK SEQUENCE MUST BE REPEATED

IF THE SECOND CMD IS SENT AFTER ~1080 MSEC (TIMER HAS RESET ITSELF), THE UNLOCK SEQUENCE MUST BE REPEATED (THE SECOND COMMAND IS INTERPRETED AS THE FIRST COMMAND OF A NEW UNLOCK SEQUENCE)

IF THE SECOND CMD IS SENT BETWEEN EITHER 400-600 MSEC OR 800-1080 MSEC, THE UNLOCK LOGIC MAY OR MAY NOT BE RESET DEPENDING UPON COMPONENT TOLERANCES

22 FOR THE SRB DOL IOM, THE 'RESET' SIGNAL TO THE BUS RCVR HYBRID IS GROUNDED (LOGIC ZERO). THIS INHIBITS THE IOM FROM RESPONDING TO PWR-UP/PWR-DOWN IOM RESET COMMANDS FROM AN SCU. PWR-UP/PWR-DOWN INITIALIZATION OF THE SRB DOL OUTPUT DISCRETES IS CONTROLLED ONLY BY THE +10V FAIL DETECTOR CIRCUIT IN THE BUS RECEIVER HYBRID

23 DIL IOM INPUT SIGNAL OF +5VDC INTERPRETED AS A LOGIC 'ONE', 0 VDC AS A LOGIC 'ZERO'. (INPUTS ARE THRESHOLDED AGAINST A +2.25 VDC REF)

24 DIFFERENTIAL AMPLIFIER THRESHOLD VALUES FOR SRB BILEVEL DISCRETE INPUT RECEIVERS SAME AS ORBITER (OM'S DIL +2.25 VDC DIH +8.00 VDC)

NOTES:

1 BIT BITE TEST SELECTED (BIT 6 = LOGIC 1), BIT 8 CONTROLS WHETHER BITE TEST 1 OR 2 IS EXERCISED. IF B8 = LOGIC 0, D-TYPE FLIP FLOP (D REGISTER) WILL BE CLOCKED AT TIME SIGNAL 'CHV PRES' IS HIGH THUS FORCING Q OUTPUT HIGH (BITE TEST 1 SELECTED) IF B8 = LOGIC 1, 'BITE ENABLE' SIGNAL WILL REMAIN LOW DURING TIME THE 'CHV PRES' SIGNAL IS HIGH AND THE D-TYPE FLIP FLOP WILL NOT BE CLOCKED. THUS, Q=NOT OUTPUT REMAINS HIGH (BITE TEST 2 SELECTED)

IF BILEVEL DISCRETE SIGNALS ARE PRESENT WHEN SRB MDM IS POWERED UP, THE FIRST RESPONSE WORD FROM A SRB DIL OR DIH TYPE IOM MAY BE ERRONEOUS DUE TO BITE TEST BITS MASKING INPUT DATA. THEREAFTER, BITE LOGIC LATCH-UP IS CLEARED AND NORMAL IOM OPERATION FOLLOWS (AFFECTS PRELAUNCH ONLY)

34 EACH IOM POWER SUPPLY IS LOCATED DIRECTLY ON THE IOM CARD ITSELF (EMDM ONLY)

35 DUE TO POTENTIAL SINGLE-POINT FAILURES, SRB MDM'S HAVE BEEN MODIFIED TO ELIMINATE CROSS STRAPPING OF REDUNDANT PWR SUPPLIES (INFLIGHT, PWR SUPPLY ISOLATION IS ACHIVED BY ISSUING 'ISOLATE ENABLE' CMDS VIA THE LPS SHORTLY PRIOR TO ISSUING MDM LOCKOUT CMDS. PWR SUPPLY FAIL/SRB ELECTRICAL BUS SWITCHOVER WILL CAUSE LOSS OF ASSOCIATED SRB HYDRAULICS CHANNEL (IF PRE-LAUNCH, THIS WILL CAUSE AN AUTOMATIC LAUNCH HOLD).

32 SIO/LRU CHANNELIZATION ASSIGNMENTS

FF'S CARD 03	FF'S CARD 11	FF'S CARD 08	FF'S CARD 15
CH00 = IMU	CH00 = ADTA	CH00 = SPARE	CH00 = IUS/SLF(PF1)
CH01 = MTU	CH01 = MLS	CH01 = PSP	CH01 = IUS/SLF(PF1)
CH02 = STKR	CH02 = SPARE	CH02 = KU-BAND(PF1)	CH02 = SPARE
CH03 = RRIF(3)	CH03 = NSP	CH03 = SPARE	CH03 = SPARE

31 TACAN CONTROL WORD FORMAT:

	CH 1	CH 2	CH 4	CH 8	CH 10	CH 20	CH 40	CH 80	SELF TEST INIT	
1	0	M/Y	M/A	T/R	0	0				0 0 0 0 0 0 0 0 0 0 0 0 0 0 0 0
1	2	3	4	5	6	7	8	9	10	11 12 13 14 15 16 17 18 19 20 21 22 23 24 25 26 27 28 29 30 31 32

30 RADAR ALTIMETER DATA FORMAT:

PARITY	MSB 4096	2048	1024	512	256	128	64	32	16	8	4	2	1 LSB	VALIDITY	CONTROL
1	2 3 4 5 6 7 8 9 10 11 12 13 14 15 16														

NOTE: THIS WORD IS TRANSMITTED BIT 16 FIRST

29 TACAN GPC 'AUTO' SIGNAL IS ROUTED TO THE GPC(S) VIA DISCRETE IOM CARDS FF1-FF3 CARD 09 (DIH), CHAN 02 (BCE STRG 'B' PROM SEQUENCE INPUTS)

28 TACAN RANGE DATA FORMAT:

RANGE STATUS (NM)	BCD 100'S (NM)	BCD 10'S (NM)	BCD 1'S (NM)	BCD 1/10'S (NM) B/10	4/10	2/10	1/10	BCD 1/100'S (NM) B/100	4/100	2/100	1/100	RANGE SELF-TEST STATUS	RANGE LABEL
1 2 3	200 100	80 40 20 10	8 4 2 1									0	0 1 0 0 0 1 0 0 1
1 2 3 4 5 6 7 8 9 10 11 12				13 14 15 16				17 18 19 20				21 22 23 24	25 26 27 28 29 30 31 32

NOTE: THIS WORD IS TRANSMITTED BIT 32 FIRST

TACAN BEARING DATA FORMAT:

PARITY	BEARING STATUS	MSB	BEARING (MSB=90 DEG, LSB=0.0439 DEG)	LSB	BEARING SELF-TEST STATUS	BEARING LABEL
1	2	3 4 5 6 7 8 9 10 11 12 13 14 15		16	17 18 19 20 21	22 23 24 25 26 27 28 29 30 31 32
				0 0 0 0 0 0		0 0 0 0 0 0 0 0 1

NOTE: THIS WORD IS TRANSMITTED BIT 32 FIRST

27 IF THE TACAN MODE SELECT SWITCH (PNL OTIS IN 'GPC' POSITION, THE TACAN IOM CHAN 6 IS LOADED VIA GPC CMD DATA XFER (HFE OUTPUT). IF MODE SELECT SWITCH IS IN 'T/R' OR 'RCV', CHAN 6 IS LOADED WITH DATA BASED UPON CURRENT TACAN CHANNEL SELECT THUMBWHEELS

IF TACAN MODE IS 'GPC' AND THERE ARE NO GPC UPDATES (TACAN SOP INACTIVE OR DATA BUS/MDM FAILURE), THE TACAN CARD DEFAULTS TO PREVIOUS (PRIOR TO 'GPC' SELECT) CHANNEL SELECT THUMBWHEELS AS THE DATA SOURCE FOR CHAN 6

WHEN TACAN MODE SELECT SWITCH IS IN A NON 'GPC' POSITION, THE TACAN IOM ALWAYS SETS CHAN 6, BIT 0 (SYNC BIT) EQUAL TO LOGIC ONE AND BIT 15 (SELF-TEST INITIATE) TO LOGIC ZERO

26 SIO IOM FORMAT (INPUT OR OUTPUT) APPEARING ON THE I/O DATA BUS BETWEEN THE MDM AND THE SHUTTLE SUB-SYSTEM IS 6 TO 12 VDC PEAK-TO-PEAK MANCHESTER II

SYNC	16 DATA BITS	PARITY
1 2 3 4 5 6 7 8 9 10	11 12 13 14 15 16 17 18 19	20

25 THE THREE SIO IOM OUTPUT DISCRETES ARE EACH 3 TO 5 VDC DIFFERENTIAL SIGNALS (LOGIC 1 = +3 TO +5 VDC, LOGIC 0 = -3 TO -5 VDC)

WORD — BRACKETS A SERIAL I/O WORD, INDICATING A 20 BIT DATA TRANSFER TO/FROM THE MDM AND THE SHUTTLE SUBSYSTEM

MSG IN — BRACKETS A SERIAL I/O MESSAGE ALERTING THE SHUTTLE SUBSYSTEM TO SEND A DATA MESSAGE TO THE MDM

MSG OUT — BRACKETS A SERIAL I/O MESSAGE ALERTING THE SHUTTLE SUBSYSTEM TO RECEIVE A DATA MESSAGE FROM THE MDM

WD DISCRETE LINE GOES HI 2 1/2 MICRO-SEC AFTER MSG OUT (-IN) DISCRETE GOES HI. START OF SYNC PULSE OCCURS 1 3/4 MICRO-SEC LATER FOR MSG OUT.

WD LINE STAYS HI FOR 25 MICRO-SEC, THEN GOES LO. MSG LINE STAYS HI UNTIL MSG TRANSMISSION COMPLETE

13 EMDM 4

SIGNATURE		DATE	NATIONAL AERONAUTICS AND SPACE ADMINISTRATION LYNDON B. JOHNSON SPACE CENTER HOUSTON, TEXAS
DSGN	V. ORTIZ	8/10/78	
DR	V. ORTIZ		ENHANCED MULTIPLEXER/ DEMULTIPLEXER
ENGR	KATHY AKAGI		
ENGR			
APP		2-9-93	
APP			SPACE SHUTTLE
OMNIPLAN			ALL
LTR E	PCN 2		126.5 X 34

DWG NO 8.13

PAGE SHEET 4 OF 4

BASIC REV E-2

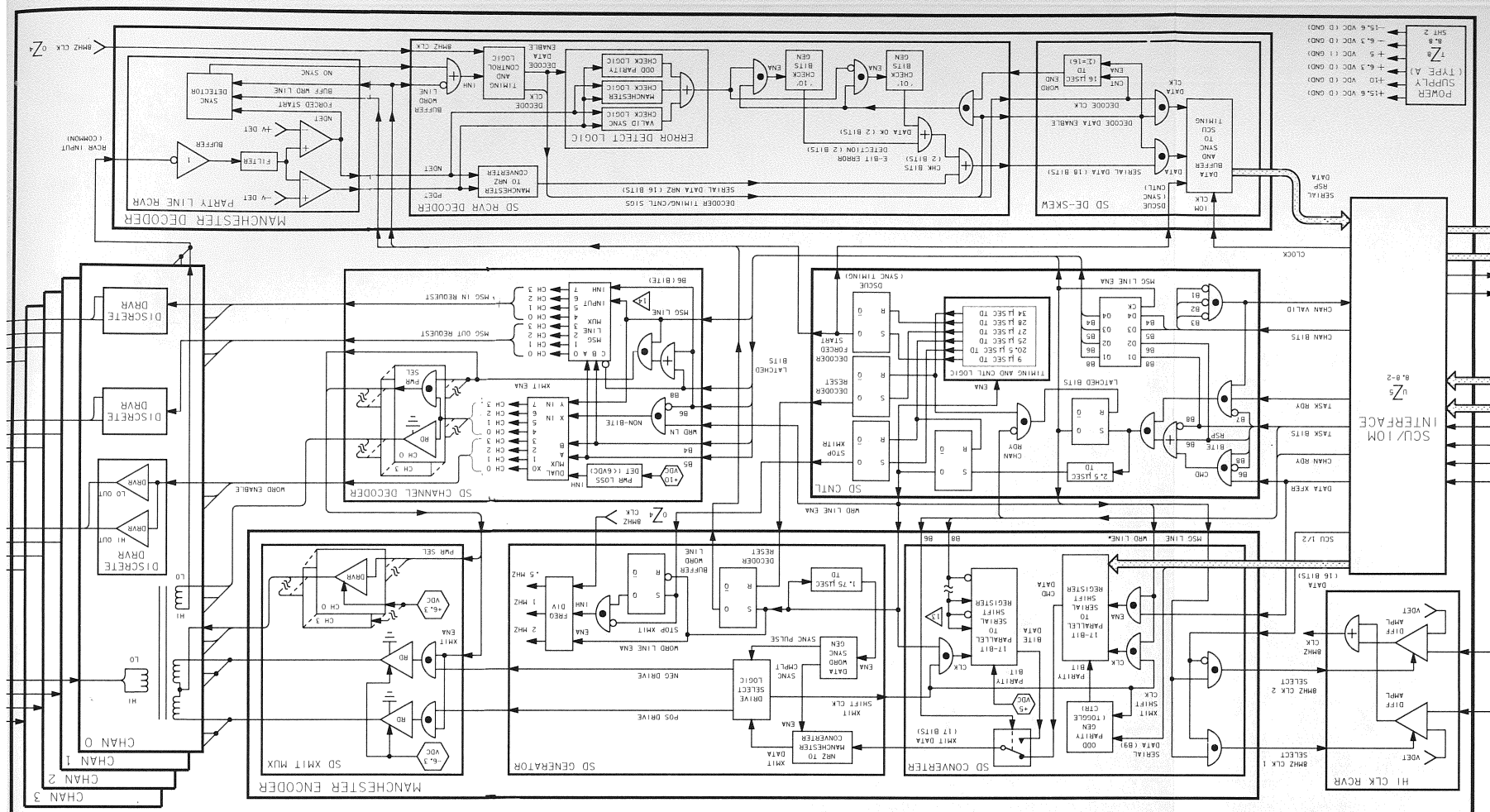
SERIAL INPUT/OUTPUT (SIO) IOM (DIGITAL)
CHAN 3
CHAN 2
CHAN 1
CHAN 0
MANCHESTER ENCODER
SD XMIT MUX
SD GENERATOR
SD CONVERTER
HI CLK RCVR
SD CHANNEL DECODER
SD CNTL
SCU/IOM INTERFACE
SD DE-SKEW
SD RCVR DECODER
MANCHESTER DECODER
PARTY LINE RCVR
DISCRETE DRVR
DISCRETE DRVR
DISCRETE DRVR

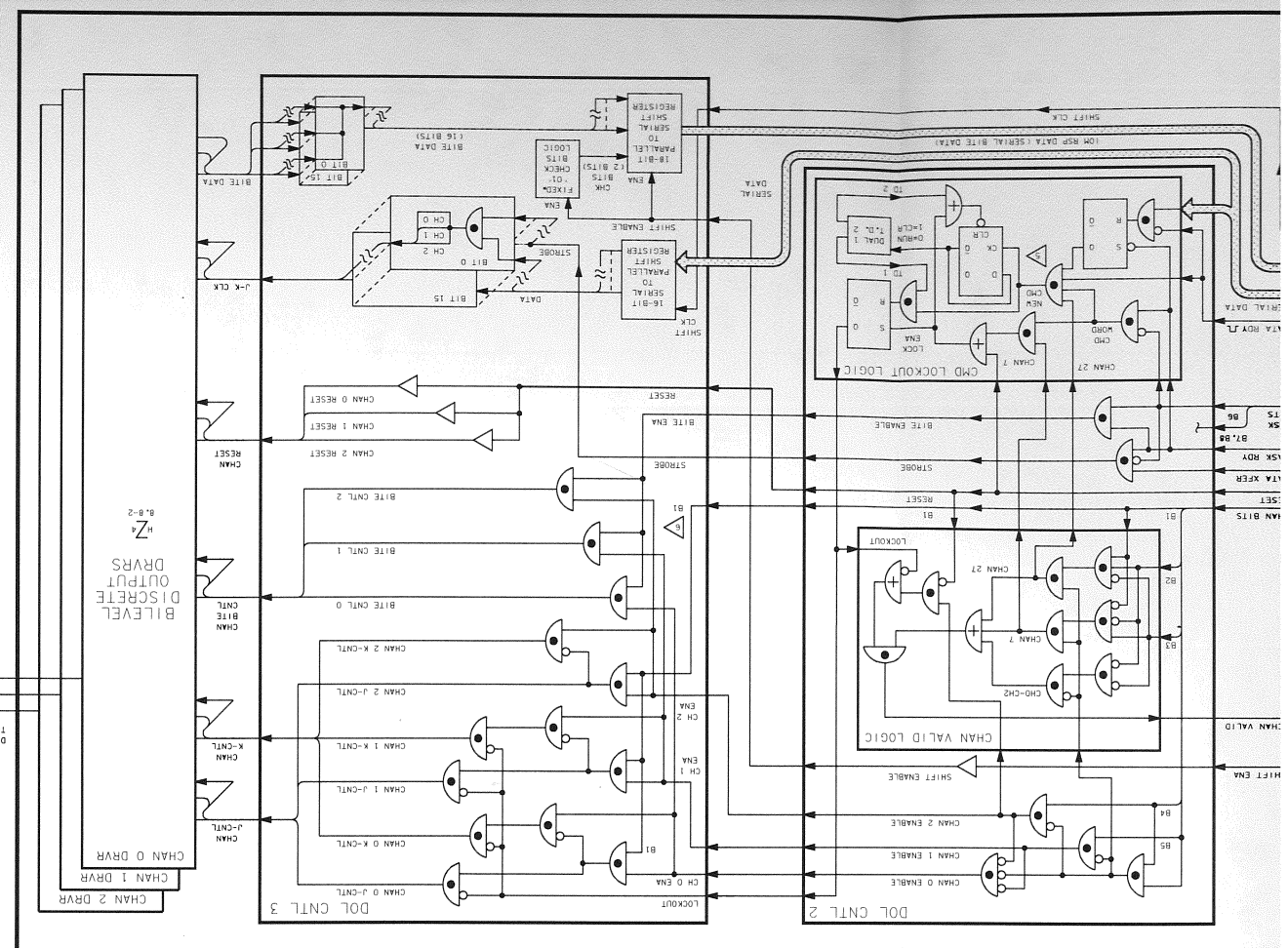
SRB DISCRETE OUTPUT LOW (DOL) IOM (5VDC)
DOL CNTL 2
DOL CNTL 3
CHAN 0 DRVR
CHAN 1 DRVR
CHAN 2 DRVR
BILEVEL DISCRETE OUTPUT DRVRS
CHAN 0 DI REGISTER
CHAN VALID LOGIC
CMD LOCKOUT LOGIC

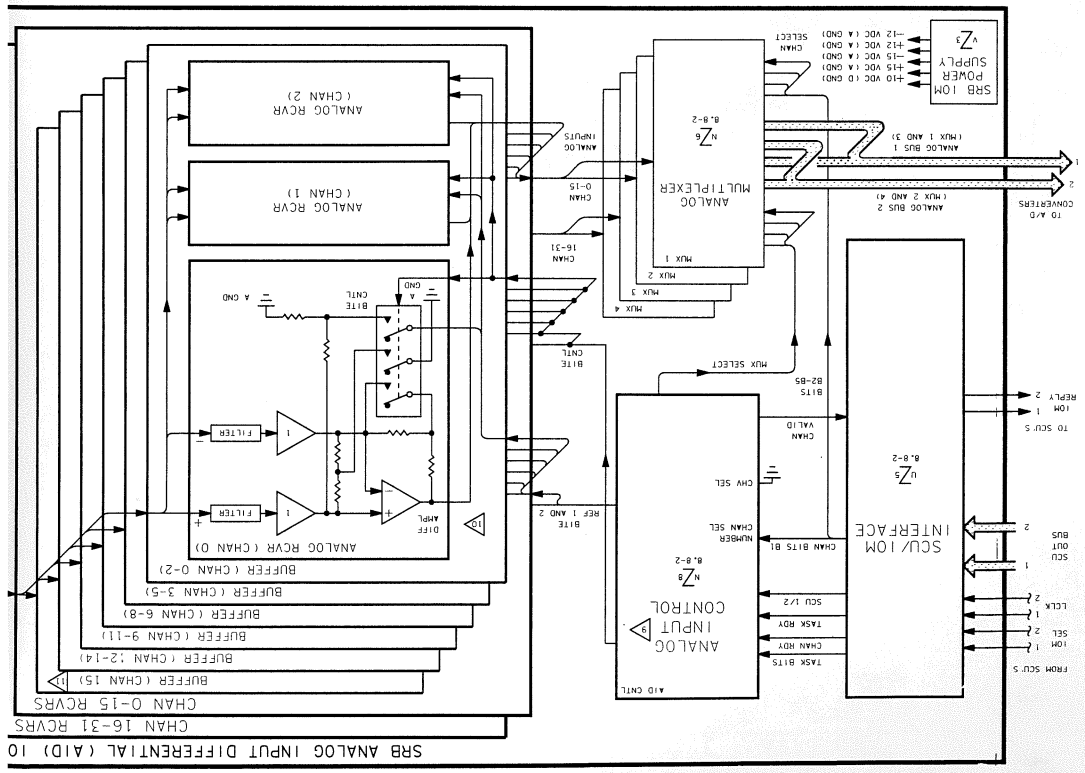
SRB ANALOG INPUT DIFFERENTIAL (AID) IO
CHAN 16-31 RCVRS
CHAN 0-15 RCVRS
ANALOG RCVR (CHAN 0)
ANALOG MULTIPLEXER
ANALOG CONTROL INPUT
SCU/IOM INTERFACE
BILEVEL DISCRETE INPUT RCVRS
SRB IOM POWER SUPPLY

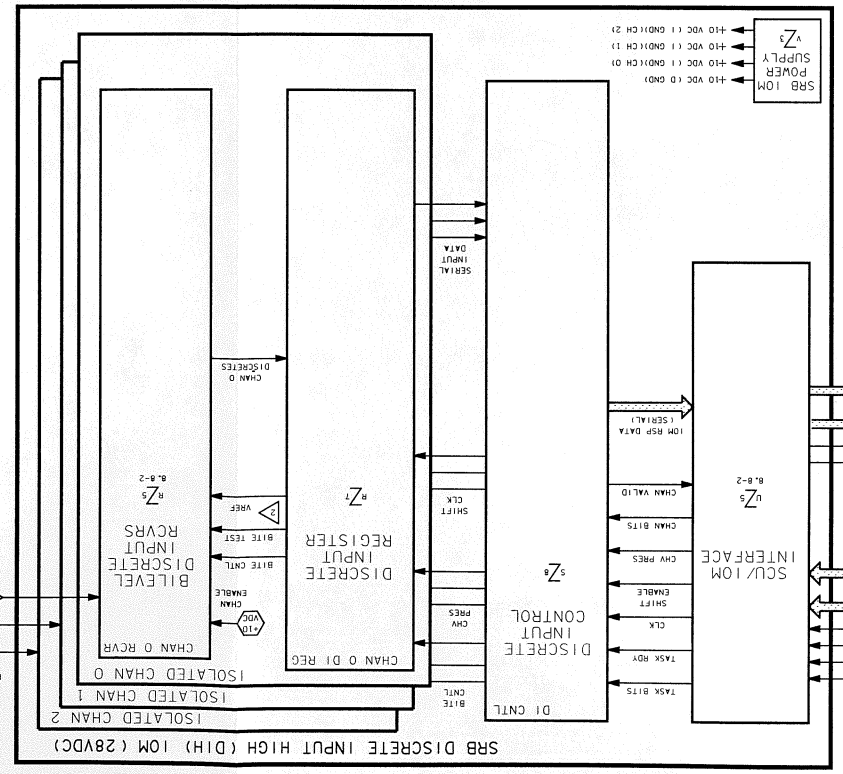
SRB DISCRETE INPUT HIGH (DIH) IOM (28VDC)
ISOLATED CHAN 0
ISOLATED CHAN 1
ISOLATED CHAN 2
CHAN 0 DI REG
DISCRETE INPUT CONTROL
SCU/IOM INTERFACE
BILEVEL DISCRETE INPUT RCVRS
SRB IOM POWER SUPPLY

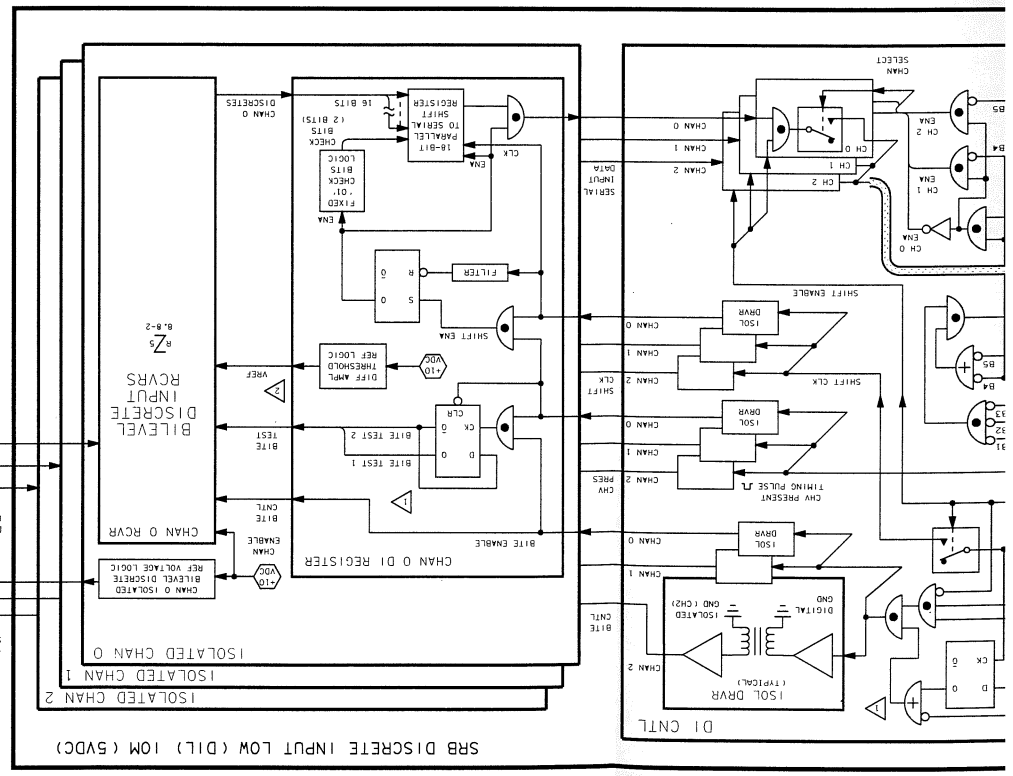
SRB DISCRETE INPUT LOW (DIL) IOM (5VDC)
ISOLATED CHAN 0
ISOLATED CHAN 1
ISOLATED CHAN 2
CHAN 0 DI REGISTER
BILEVEL DISCRETE INPUT RCVRS
DI CNTL

DATE: 02-07-93 | NAME: SKK | VERSION: INK 1

W V U T S R Q P O N

8 7 6 5 4 3 2 1

INPUT IOM CMD FORMAT (FROM SCU)

CHAN ADRS			IOM TASK			CHECK BITS		
B1	B2	B3	B4	B5	B6	B7	B8	B9	B10

OUTPUT IOM CMD FORMATS (FROM SCU)

CHAN ADRS			IOM TASK			16 DATA BITS			CHECK BITS		
B1	B2	B3	B4	B5	B6	B7	B8	B9	B24	B25	B26

CHAN ADRS			IOM TASK			CHECK BITS		
B1	B2	B3	B4	B5	B6	B7	B8	B9	B10

IOM RESPONSE DATA WORD FORMAT (TO SCU)

16 DATA BITS					CHECK BITS			
B1	B2	B3	B4	B5	B15	B16	B17	B18

IOM TASK:
000 - RSP DATA REQUEST (INPUT IOM'S)
001 - CMD DATA TRANSFER (OUTPUT IOM'S)
01X - RESET IOM
1X0 - BITE TEST 1
1X1 - BITE TEST 2

CHECK BITS:
01 - EXECUTE CMD
OTHER - ILLEGAL CODE (TERMINATES CMD)

SRB DISCRETE INPUT LOW (DIL) IOM (5VDC)

SRB DISCRETE INPUT HIGH (DIH) IOM (28VDC)

SRB DISCRETE OUTPUT LOW (DOL) IOM (5VDC)

SRB IOM PWR SUPPLY (IOM 7)
SRB IOM PWR SUPPLY (IOM 4)
SRB IOM PWR SUPPLY (IOM 2)
SRB IOM PWR SUPPLY (IOM 0)

PS ISOLATION LOGIC

SRB IOM PS (TYPICAL) IOM 0 PS

BASIC REV E-2

FOR DETAILED COMPONENT AND LOGIC INFORMATION REFER TO:

SSSH DWG NO.	SSSH DWG TITLE	VENDOR NAME	VENDOR DWG NO.	VENDOR SHEET NO.	REV	DATE	VENDOR DRAWING TITLE
8.1	COMPUTER INPUT/OUTPUT FUNCTION	ROCKWELL	VS70-720222	1-4	J	6/2/85	SCHEMATIC DIAGRAM - COMPUTER POWER AND CONTROLS SUBSYSTEM
			VS70-720239	1-5	B	9/15/88	COMPUTER SYNCHRONIZATION AND FAILS STATUS
			VS70-733262	1-5	H	6/16/85	D & C PANEL 06 OVERHEAD CONSOLE
			VS70-720242	1-8	B	7/21/80	SCHEMATIC DIAGRAM - COMPUTER DATA BUS SUBSYSTEM INTERFACE
8.2	BACKUP FLIGHT CONTROLLER	ROCKWELL	15180507	1	-	-	BACKUP FLIGHT CONTROLLER BOARD
			15180507	2	-	-	BACKUP FLIGHT CONTROLLER BOARD
			15180507	3	-	-	BACKUP FLIGHT CONTROLLER BOARD
			VS70-720269	1-6	E	9/16/88	SCHEMATIC DIAGRAM BACKUP FLIGHT CONTROL COMPUTER INTERFACE
			VS70-971102	115-120	D	9/85	INTEGRATED SYSTEM SCHEMATICS OV102 GNC & DPS
8.5	MASS MEMORY	ODETICS	4410394	1	-	7/76	INTERCONNECT DIAGRAM
			4410395	1	-	7/76	STANDBY ELECTRONICS POWER SUPPLY
			4410396	1	-	7/76	SERVO PREREGULATOR
			4410397	1	-	7/76	CONTROLLER READ/WRITE ELECTRONICS
			4410397	2	-	7/76	CONTROLLER READ/WRITE ELECTRONICS
			4410397	3	-	7/76	CONTROLLER READ/WRITE ELECTRONICS
			4410397	4	-	7/76	CONTROLLER READ/WRITE ELECTRONICS
			4410397	5	-	7/76	CONTROLLER READ/WRITE ELECTRONICS
			4410397	6	-	7/76	CONTROLLER READ/WRITE ELECTRONICS
			4410397	7	-	7/76	CONTROLLER READ/WRITE ELECTRONICS
			4410397	8	-	7/76	CONTROLLER READ/WRITE ELECTRONICS
			4410431	1	B	5/76	TACH PREAMP/DRIVER
			4410436	1	-	2/75	READ TRACK SELECT, PREAMPLIFIER
			4410446	1	B	6/76	WRITE HEAD DRIVER
			4410451	1	G	6/76	ANALOG READ ELECTRONICS
			4410481	1	A	5/76	CONTROLLER STATUS CONDITIONING/STANDBY POWER REGULATOR
			4410486	1	A	6/76	MIA ADAPTER
			4410516	1	B	7/76	INTERCONNECT AND POWER DISTRIBUTION ELECTRONICS
		ROCKWELL	VS70-720589	1	-	11/80	SCHEMATIC DIAGRAM DATA BUS MMU 1 & MMU 2
			VS70-720582	1	B	3/78	SCHEM DIA DATA BUS MMU 1 & 2
			VS70-720212	1-2	E	6/85	SCHEMATIC DIAGRAM MMU & COMPUTER INTERFACE
			VS70-720219	1-2	A	8/88	SCHEMATIC DIAGRAM MMU & COMPUTER INTERFACE

DWG	SIGNATURE	DATE	DWG	SIGNATURE	DATE
8.1	ENGR R. HUDSON			ENGR	
	ENGR R. Hudson	9-22-94		ENGR	
8.2	ENGR J. HILL			ENGR	
	ENGR J.B. Hill	9-22-94		ENGR	
8.5	ENGR T. KEELER			APP Robert E. Floyd	9-27-94
	ENGR Terry W. Keeler	22Sept94		APP	
	ENGR			APP	
	ENGR			LTR E PCN 4	

NATIONAL AERONAUTICS AND SPACE ADMINISTRATION
LYNDON B. JOHNSON SPACE CENTER HOUSTON, TEXAS

VENDOR DRAWING REFERENCES

SPACE SHUTTLE	TBL NO 8-I
ALL	
	PAGE 8.I-1 SHEET 1 OF 8

BASIC REV E-4

FOR DETAILED COMPONENT AND LOGIC INFORMATION REFER TO:

SSSH DWG NO.	SSSH DWG TITLE	VENDOR NAME	VENDOR DWG NO.	VENDOR SHEET NO.	REV	DATE	VENDOR DRAWING TITLE
8.6	MULTIFUNCTION CRT DISPLAY SYSTEM	IBM	6239700	1	K	11/85	KEYBOARD UNIT
			6239700	2	B	1/76	KEYBOARD UNIT
			6239700	3	C	3/76	KEYBOARD UNIT
			6239704	1	A	4/76	KEYBOARD UNIT ELECTRICAL SCHEMATIC
			6239704	2	A	4/76	KEYBOARD UNIT ELECTRICAL SCHEMATIC
			6239704	3	A	4/76	KEYBOARD UNIT ELECTRICAL SCHEMATIC
			6239704	4	-	6/75	KEYBOARD UNIT ELECTRICAL SCHEMATIC
			6239269	1-23	A	1/76	LOGIC DIAGRAM FOR A01 BACKPANEL
			6239289	1-15	-	6/75	LOGIC DIAGRAM FOR A07A, SMCM
			6239299	1-15	A	1/76	LOGIC DIAGRAM FOR A07B, SMCM
			6239329	1-22	A	1/76	LOGIC DIAGRAM FOR A03A, MIA ADAPTER
			6239339	1-20	A	1/76	LOGIC DIAGRAM FOR A03B INITIALIZES
			6239349	1-12	A	1/76	LOGIC DIAGRAM FOR A04A KEYBOARD ADAPTER A
			6239359	1-12	A	1/76	LOGIC DIAGRAM FOR A04B KEYBOARD ADAPTER B
			6239369	1-22	A	1/76	LOGIC DIAGRAM FOR A05A, SPO CPU
			6239379	1-23	A	1/76	LOGIC DIAGRAM FOR A05B, SPO CPU
			6239389	1-20	A	1/76	LOGIC DIAGRAM FOR A06A DRIVERS
			6239399	1-20	A	1/76	LOGIC DIAGRAM OR A06B
			6239409	1-22	A	1/76	LOGIC DIAGRAM OR A11A CHAR GEN
			6239419	1-27	A	1/76	LOGIC DIAGRAM FOR A11B POSITION & TYPE
			6239429	1-22	A	1/76	LOGIC DIAGRAM FOR A12A, REQ & VIDEO
			6239439	1-20	A	1/76	LOGIC DIAGRAM FOR A12B TIMING & ADD
			6239449	1-20	A	1/76	LOGIC DIAGRAM FOR A13A CIRCLES & VECTORS
			6239459	1-22	A	1/76	LOGIC DIAGRAM FOR A13B MODE & ROTATION
			6239469	1-19	A	1/76	LOGIC DIAGRAM FOR A14A, TRANSLATE & STATUS
			6239479	1-5	A	1/76	LOGIC DIAGRAM FOR A14B, STATUS I/O
			6239489	1-26	A	1/76	LOGIC DIAGRAM FOR A15A, BIT WRAP
			6239499	1-14	-	6/75	LOGIC DIAGRAM
			6239509	1-6	A	1/76	LOGIC DIAGRAM FOR A17A
			6239519	1-5	-	6/75	LOGIC DIAGRAM FOR A17B
			6239529	1-5	-	6/75	LOGIC DIAGRAM FOR A18A
			6239539	1-5	-	6/75	LOGIC DIAGRAM FOR A18B
			6239549	1-6	-	6/75	LOGIC DIAGRAM FOR A19A
			6239559	1-6	-	6/75	LOGIC DIAGRAM FOR OUTPUT MUX
			6239569	1-5	A	5/75	CONNECTIONS X-Y DEFLECT
			6239579	1-5	A	5/75	CONNECTIONS OVERSCAN
			1244-00340	-	-	-	DEFLECTION AMPLIFIER ASSEMBLY SCHEMATIC

DWG	SIGNATURE	DATE	DWG	SIGNATURE	DATE
8.6	ENGR G. ARAIZA YOUNG			ENGR	
	ENGR D. Araiza Young	9/22/94		ENGR	
	ENGR			ENGR	
	ENGR			ENGR	
	ENGR			APP Robert E. Hoyt	9-27-94
	ENGR			APP	
	ENGR			APP	
	ENGR			LTR E PCN 4	

NATIONAL AERONAUTICS AND SPACE ADMINISTRATION
LYNDON B. JOHNSON SPACE CENTER HOUSTON, TEXAS

VENDOR DRAWING REFERENCES

SPACE SHUTTLE | TBL NO 8-I
ALL

BASIC REV E-4

FOR DETAILED COMPONENT AND LOGIC INFORMATION REFER TO:

SSSH DWG NO.	SSSH DWG TITLE	VENDOR NAME	VENDOR DWG NO.	VENDOR SHEET NO.	REV	DATE	VENDOR DRAWING TITLE
8.6 CONT	MULTIFUNCTION CRT DISPLAY SYSTEM	ROCKWELL	VS70-730109	1-7	D	8/85	SCHEMATICS DIAG - DISPLAY & CONTROLS
			VS70-720579	1-3	A	10/13/88	DP&S DATA BUSES
		NORDEN	1244-00031	1	F		ORBITER DISPLAY BIT CIRCUIT SCHEMATIC
			1244-00141	1	A	/75	ORBITER DISPLAY LVPS
			1244-00213	1	-	/75	VOLTAGE CONTROL REGULATOR & PHOSPHER PROTECTION
			1244-00239	1	B	/75	ORBITER DISPLAY UNIT VIDEO AMPLIFIER SCHEMATIC
			1244-00244	1	-	/75	ORBITER DISPLAY UNIT WIRING SCHEMATIC
			1244-00244	2	-	/75	ORBITER DISPLAY UNIT WIRING SCHEMATIC
			1244-00253	1	-	4/76	ORBITER DEFLECTION AMPLIFIER SCHEMATIC
8.7-1	DPS PWR 1	ROCKWELL	VS70-720209	1,2	B	4/87	SCHEMATIC DIAGRAM - DATA PROC & SOFTWARE, FLT CONT MDM PWR & CONT
			VS70-720219	1	B	11/88	SCHEMATIC DIAGRAM - MASS MEMORY & COMPUTER INTERFACE SUBSYSTEM
			VS70-720229	1,3	D	9/88	SCHEMATIC DIAGRAM - COMPUTER POWER AND CONTROLS SUBSYSTEM
			VS70-720269	1, 2, 5	E	9/88	SCHEMATIC DIAGRAM BACKUP FLT CONT COMPUTER INTERFACE
			VS70-730109	1,2	D	8/85	SCHEMATIC DIAGRAM - DISPLAYS AND CONTROLS
			VS70-730159	1	-	4/80	SCHEMATIC DIAGRAM - TIMERS SUBSYSTEM
			VS70-733519	1	A	9/84	SCHEMATIC DIAGRAM PANEL F6A5
			VS70-750139	2,3	M	12/87	SCHEMATIC DIAGRAM - MASTER TIMING UNIT
			VS70-750209	2,3	K	6/88	SCHEMATIC DIAGRAM - OI POWER AND CONTROL
			VS70-760503	9	B	4/88	SCHEMATIC DIAGRAM - EVCON SUBSYSTEM
			VS70-948099	6,7	A	10/87	INTEGRATED SCHEMATIC DRAWINGS - SOLID ROCKET BOOSTERS
8.7-1	DPS PWR 2		VS70-720229	1,3	D	8/88	SCHEMATIC DIAGRAM - COMPUTER POWER AND CONTROLS SUBSYSTEM
			VS70-720239	2	A	5/81	SCHEMATIC DIAGRAM - COMPUTER SYNCHRONIZATION AND FAIL STATUS
			VS70-720269	1, 2, 5	E	8/88	SCHEMATIC DIAGRAM - BACKUP FLT CONT COMPUTER INTERFACE
			VS70-750209	2, 3	K	6/88	SCHEMATIC DIAGRAM - OI POWER AND CONTROL
8.7-3	DPS PWR 3		VS70-720209	1,2	B	4/87	SCHEMATIC DIAGRAM - DATA PROC & SOFTWARE, FLT CONT MDM PWR & CONT
			VS70-720219	1	B	11/88	SCHEMATIC DIAGRAM - MASS MEMORY & COMPUTER INTERFACE SUBSYSTEM
			VS70-720229	1, 3	D	8/88	SCHEMATIC DIAGRAM - COMPUTER POWER AND CONTROLS SUBSYSTEM
			VS70-720269	1, 2, 5	E	8/88	SCHEMATIC DIAGRAM - BACKUP FLT CONT COMPUTER INTERFACE
			VS70-730109	1, 2	D	8/85	SCHEMATIC DIAGRAM - DISPLAYS AND CONTROLS
			VS70-760503	9	B	4/88	SCHEMATIC DIAGRAM - EVCON SUBSYSTEM

DWG	SIGNATURE	DATE	DWG	SIGNATURE	DATE
8.6	ENGR G. ARAIZA YOUNG			ENGR	
	ENGR G. Araiza Young	9/22/94		ENGR	
8.7-1,2,3	ENGR R. WALTON			ENGR	
	ENGR Robert A. Walton	9/22/94		ENGR	
	ENGR			APP Robert F. Floyd	9-27-94
	ENGR			APP	
	ENGR			APP	
	ENGR			LTR E PCN 4	

NATIONAL AERONAUTICS AND SPACE ADMINISTRATION
LYNDON B. JOHNSON SPACE CENTER HOUSTON, TEXAS

VENDOR DRAWING REFERENCES

SPACE SHUTTLE ALL | TBL NO 8-I

BASIC REV E-4

FOR DETAILED COMPONENT AND LOGIC INFORMATION REFER TO:

SSSH DWG NO.	SSSH DWG TITLE	VENDOR NAME	VENDOR DWG NO.	VENDOR SHEET NO.	REV	DATE	VENDOR DRAWING TITLE	
8.8	MULTIPLEXER/ DEMULTIPLEXER	ROCKWELL	VS70-720202	1-3	E, EO-E01	7/90	SCHEMATIC DIAGRAM - DATA PROCESSING & SOFTWARE, FLT CONT MDM POWER & CONTROL	
			VS70-720209	1-3	D, EO-D01	11/93	SCHEMATIC DIAGRAM - DATA PROCESSING & SOFTWARE, FLT CONT MDM POWER & CONTROL	
			VS72-948102	6-7,56-57	C, EO-D17	4/89	INTEGRATED SYS SCHEMATIC SOLID ROCKET BOOSTER	
			VS72-948099	6-7,56-57	N/C, EO-A17	6/92	INTEGRATED SYS SCHEMATIC SOLID ROCKET BOOSTER	
		SINGER/ KEARFOTT	Y214A367-01	1	A	4/75	SERIAL MIA	
			Y215A030-02	1	B	2/75	SMIA CONTROL / TIMING HYBRID	
			Y215A032-01	1-2	A	9/74	SMIA XMTR / RCVR HYBRID	
			Y215A193-01	1-4	-	1/75	SMIA LSI MICROCIRCUIT HYBRID	
		HONEYWELL	4027158-902	1-2	A	4/77	MDM MIA INTERFACE MODULE	SRB
			4027159-901	1-5	-	12/75	MDM SCU MODULE	SRB
			4027160-902	1-5	-	5/77	MDM IOM PWR SUPPLY MODULE	SRB
			4027161-901	1-2	-	12/75	MDM A/D CONVERTER MODULE	SRB
			4027162-901	1-7	-	12/75	MDM I/O MODULE (SRB AID)	SRB
			4027341-901	1-3	-	12/75	MDM I/O MODULE (SRB DIH)	SRB
			4027342-901	1-5	-	12/75	MDM I/O MODULE (SRB DIL)	SRB
			4027343-902	1-5	-	9/77	MDM I/O MODULE (SRB DOL)	SRB
			4028012-902	1-4	-	5/77	MDM CORE PWR SUPPLY	SRB
			4022684-901	1-20	A	3/76	MDM SCU MODULE	"5XXX" SERIES ①
			4022685-901	1-7	-	1/75	MDM CORE PWR SUPPLY	"5XXX" SERIES ①
			4022686-901	1-9	B	12/75	MDM A/D CONVERTER MODULE	"5XXX" SERIES ①
			4022687-901	1-8	A	9/76	MDM I/O MODULE (AID)	"5XXX" SERIES ①
			4022688-901	1-9	A	2/76	MDM I/O MODULE (AIS)	"5XXX" SERIES ①
			4022689-901	1-7	-	7/75	MDM I/O MODULE (DIL)	"5XXX" SERIES ①
			4022690-901	1-8	-	5/75	MDM I/O MODULE (DIH)	"5XXX" SERIES ①
			4022691-901	1-9	-	5/75	MDM I/O MODULE (DOL)	"5XXX" SERIES ①
			4022692-901	1-10	A	8/75	MDM I/O MODULE (DOH)	"5XXX" SERIES ①
			4022693-901	1-9	A	11/75	MDM I/O MODULE (AOD)	"5XXX" SERIES ①
			4022694-901	1-17	A	3/76	MDM I/O MODULE (SIO)	"5XXX" SERIES ①
			4022695-801	1-16	-	7/75	MDM I/O MODULE (TAC)	"5XXX" SERIES ①
			4022696-901	1-8	A	10/75	MDM MIA INTERFACE MODULE	"5XXX" SERIES ①
			4024876-913	1-7	-	7/75	MDM IOM PWR SUPPLY MODULE (IOM 0-7)	"5XXX" SERIES ①
			4024876-914	1-5	-	7/75	MDM IOM PWR SUPPLY MODULE (IOM 8-15)	"5XXX" SERIES ①

NOTES

① "5XXX" SERIES MDM'S DEVELOPED FOR ORBITER VEHICLE OV-102 (DDT&E MDM): DESIGN, DEVELOPMENT, TEST, AND EVALUATION VERSION. DUE TO LIMITED SPARES, THESE MDM'S MAY BE FLOWN ON ANY ORBITER VEHICLE.

DWG	SIGNATURE	DATE
8.8	ENGR JAMES HILL	
	ENGR J. B. Hill	9-22-94
	ENGR	
	ENGR	
	APP Robert S. Lloyd	9-27-94
	APP	
	APP	
	LTR E PCN 4	

NATIONAL AERONAUTICS AND SPACE ADMINISTRATION
LYNDON B. JOHNSON SPACE CENTER HOUSTON, TEXAS

VENDOR DRAWING REFERENCES

SPACE SHUTTLE | TBL NO 8-I
ALL

FOR DETAILED COMPONENT AND LOGIC INFORMATION REFER TO:

SSSH DWG NO.	SSSH DWG TITLE	VENDOR NAME	VENDOR DWG NO.	VENDOR SHEET NO.	REV	DATE	VENDOR DRAWING TITLE
8.8 CONT	MULTIPLEXER/ DEMULTIPLEXER	HONEYWELL	4022684-902	1-20	-	5/80	MDM SCU MODULE "6XXX" SERIES ②
			4022685-903	1-8	A	1/83	MDM CORE PWR SUPPLY "6XXX" SERIES ②
			4022686-902	1-8	-	5/80	MDM A/D CONVERTER MODULE "6XXX" SERIES ②
			4022687-902	1-8	-	5/80	MDM I/O MODULE (AID) "6XXX" SERIES ②
			4022688-902	1-9	-	5/80	MDM I/O MODULE (AIS) "6XXX" SERIES ②
			4022689-902	1-7	-	5/80	MDM I/O MODULE (DIL) "6XXX" SERIES ②
			4022690-902	1-8	-	5/80	MDM I/O MODULE (DIH) "6XXX" SERIES ②
			4022691-902	1-9	-	5/80	MDM I/O MODULE (DOL) "6XXX" SERIES ②
			4022692-902	1-10	-	5/80	MDM I/O MODULE (DOH) "6XXX" SERIES ②
			4022693-902	1-9	-	5/80	MDM I/O MODULE (AOD) "6XXX" SERIES ②
			4022694-902	1-17	-	5/80	MDM I/O MODULE (SIO) "6XXX" SERIES ②
			4022695-903	1-16	-	5/80	MDM I/O MODULE (TAC) "6XXX" SERIES ②
			4022696-902	1-8	A	3/79	MDM MIA INTERFACE MODULE "6XXX" SERIES ②
			4024876-951	1-7	-	4/80	FF MDM IOM PWR SUPPLY MODULE (IOM 0-7) "6XXX" SERIES ②
			4024876-952	1-7	-	4/80	FF MDM IOM PWR SUPPLY MODULE (IOM 8-15) "6XXX" SERIES ②
			4024876-953	1-6	-	4/80	FA MDM I0M PWR SUPPLY MODULE "6XXX" SERIES ②
			4024876-954	1-6	-	4/80	FA MDM I0M PWR SUPPLY MODULE "6XXX" SERIES ②
			4024876-955	1-5	-	4/80	OF1-3 MDM I0M PWR SUPPLY MODULE "6XXX" SERIES ②
			4024876-956	1-5	-	4/80	OF1-3 MDM I0M PWR SUPPLY MODULE "6XXX" SERIES ②
			4024876-957	1-5	-	4/80	OA MDM I0M PWR SUPPLY MODULE "6XXX" SERIES ②
			4024876-958	1-5	-	4/80	OA MDM I0M PWR SUPPLY MODULE "6XXX" SERIES ②
			4024876-959	1-5	-	4/80	OF4 MDM I0M PWR SUPPLY MODULE "6XXX" SERIES ②
			4024876-960	1-5	-	4/80	OF4 MDM I0M PWR SUPPLY MODULE "6XXX" SERIES ②
			4024876-961	1-6	-	4/80	LF/LA MDM I0M PWR SUPPLY MODULE "6XXX" SERIES ②
			4024876-962	1-6	-	4/80	LF/LA MDM I0M PWR SUPPLY MODULE "6XXX" SERIES ②
			4024876-963	1-7	-	4/80	PF MDM I0M PWR SUPPLY MODULE "6XXX" SERIES ②
			4024876-964	1-6	-	4/80	PF MDM I0M PWR SUPPLY MODULE "6XXX" SERIES ②

NOTES

② "6XXX" SERIES MDM'S DEVELOPED FOR POST OV-102 ORBITERS (INCR III MDM): INCREMENT III VERSION. DUE TO LIMITED SPARES, THESE MDM'S MAY BE FLOWN ON ANY ORBITER VEHICLE.

DWG	SIGNATURE		DATE
8.8	ENGR JAMES HILL		
	ENGR J.B. Hill		9-22-94
	ENGR		
	ENGR		
	APP Kurt E. Floyd		9-27-94
	APP		
	APP		
	LTR E	PCN 4	

NATIONAL AERONAUTICS AND SPACE ADMINISTRATION
LYNDON B. JOHNSON SPACE CENTER HOUSTON, TEXAS

VENDOR DRAWING REFERENCES

SPACE SHUTTLE ALL

TBL NO 8-I

FOR DETAILED COMPONENT AND LOGIC INFORMATION REFER TO:

SSSH DWG NO.	SSSH DWG TITLE	VENDOR NAME	VENDOR DWG NO.	VENDOR SHEET NO.	REV	DATE	VENDOR DRAWING TITLE
8.9	MASTER TIMING UNIT	ROCKWELL	VS70-750139	-	M	12/87	SCHEMATIC DIAGRAM MASTER TIMING UNIT
		WESTINGHOUSE	9RD5137	1-10	E	12/75	MISCELLANEOUS BOARD
			9RD4938	1-3	A	12/75	MOTHERBOARD CONNECTORS
			9RD4940	1	A	12/75	MTU POWER SUPPLY CHASSIS
			9RD4939	1	B	12/75	MTU POWER SUPPLY BOARD
			9RD5133	1-6	C	7/75	ACCUMULATOR BOARD
			9RD5135	1-9	H	12/75	UPDATE BOARD
			9RD5134	1-9	F	12/75	FREQUENCY DIVIDER BOARD
			9RD5136	1-12	F	12/75	VOTED DEMAND BOARD
8.10	TIMERS	CONRAC	7904607	1	A	2/76	EVENT TIMER INTERCONNECTION DIA
			7904586	1-3	D	11/75	LOGIC DIAGRAM, INTERNAL CIRCUIT HYBRID CONDITIONING
			7904630	1	A	2/76	SCHEMATIC DIAGRAM, POWER SUPPLY
			7904638	1-2	A	2/76	MISSION TIMER INTERCONNECTION DIAGRAM
			7904662	1-3	B	10/75	LOGIC DIAGRAM, INTERNAL CIRCUIT HYBRID CONDITIONING
			7904582	1-2	A	8/75	LOGIC DIAGRAM INTERNAL CIRCUIT HYBRID DIRECT CURRENT READOUT
8.11	PANEL 06 GPC SWITCHES	RI	ME452-0102	9 of 13	K	12/87	TOGGLE SWITCH 3 POLE
		RI	VS70-720229	1, 2, 3 of 4	D	8/24/88	SCHEMATIC DIAGRAM - COMPUTER PWR & CONTROLS SUBSYSTEM
		RI	VS70-720269	1, 5 of 6	D	4/11/83	SCHEMATIC DIAGRAM - BACKUP FLT CONT COMPUTER INTERFACE (SUBSYSTEM)
		RI	VS70-971099	146	N/C	EO/A12 5/8/87	COMPUTER POWER & CONTROLS GPC-1
				147	-	-	COMPUTER POWER & CONTROLS GPC-2
				148	-	-	COMPUTER POWER & CONTROLS GPC-3
				149	-	-	COMPUTER POWER & CONTROLS GPC-4
				150	-	-	COMPUTER POWER & CONTROLS GPC-5
8.12	AP101S GENERAL PURPOSE COMPUTER	IBM	M7793/2-003	-	-	N/A	METER, TIME TOTAL
			106A250-1	E003A062	-	2/26/86	PRINTED WIRING BOARD (PWB), MULTILAYER, A SIDE
			106A260-1	E3A76	A	4/6/87	PWB, MULTILAYER
			106A270-1	E3A70	-	3/4/86	PWB, MULTILAYER, A SIDE
			106A280-1	E3A73	-	3/4/86	PWB, MULTILAYER, B SIDE
			106A290-1	E3A71	A	4/6/87	PWB, MULTILAYER, MIB
			106A300-1	E3A57	-	3/14/86	PWB, MULTILAYER, A SIDE
			106A310-1	E3A60	-	3/4/86	PWB, MULTILAYER, MIB
			106A320-1	E26A114	-	8/19/86	PWB, MULTILAYER
			106A860-1	E3A58	-	8/25/86	PWB, MULTILAYER, A SIDE
			106A870-1	E3A70	A	4/6/87	PWB, MULTILAYER
			106A880-1	E3A65	-	3/14/86	PWB-A SIDE
			106A890-1	E3A72	-	3/14/86	PWB-B SIDE
			106A900-1	E3A69	-	3/14/86	PWB-A SIDE
			106A910-1	E3A67	-	3/14/86	PWB-B SIDE
			106A920-1	E3A65	A	4/6/87	PWB, MULTILAYER
			106A930-1	E3A66	-	3/21/86	PWB, MULTILAYER
			106A940-1	E3A64	-	3/21/86	PWB, MULTILAYER
			106A950-1	E3A58	-	3/27/86	PWB, MULTILAYER, A SIDE
			106A960-1	E3A70	-	3/27/86	PWB, MULTILAYER, B SIDE
			106A970-1	E3A53	-	6/30/86	PWB, LAYER 9 & 10
			106A980	E3A60	-	6/3/86	PWB, MULTILAYER, B SIDE
			116A783-11	B3	B	8/15/90	CONNECTOR
			116A783-12	B3	B	8/15/90	CONNECTOR
			116A783-13	B3	B	8/15/90	CONNECTOR
			116A783-14	B3	B	8/15/90	CONNECTOR
			116A783-15	B3	B	8/15/90	CONNECTOR
			116A783-16	B3	B	8/15/90	CONNECTOR
			116A783-2	B3	B	8/15/90	CONNECTOR
			116A783-22	B3	B	8/15/90	CONNECTOR
			116A783-4	B3	B	8/15/90	CONNECTOR
			116A783-5	B3	B	8/15/90	CONNECTOR
			116A783-7	B3	B	8/15/90	CONNECTOR
			116A783-8	B3	B	8/15/90	CONNECTOR
			116A783-9	B3	B	8/15/90	CONNECTOR
			121A570	E3A67	A	8/22/88	PWB, MULTILAYER
			6953076-1	-	A	11/29/83	INTERRUPT PAGE - FRAME
			6953166-1	A1E1	A	11/29/83	CPU 1 PAGE - FRAME

DWG	SIGNATURE	DATE	DWG	SIGNATURE	DATE
8.9	ENGR GARY SHAM			ENGR	
	ENGR [signature]	9-26-94		ENGR	
8.10	ENGR M. LaFLEUR			ENGR	
	ENGR [signature]			ENGR	
8.11	ENGR R. WALTON			APP [signature]	9-27-94
	ENGR [signature]	9/22/94		APP	
8.12	ENGR K. TERRY			APP	
	ENGR [signature]	9-26-94		LTR E	PCN 4

NATIONAL AERONAUTICS AND SPACE ADMINISTRATION
LYNDON B. JOHNSON SPACE CENTER HOUSTON, TEXAS

VENDOR DRAWING REFERENCES

SPACE SHUTTLE	TBL NO 8-I
ALL	

BASIC REV E-4

FOR DETAILED COMPONENT AND LOGIC INFORMATION REFER TO:

SSSH DWG NO.	SSSH DWG TITLE	VENDOR NAME	VENDOR DWG NO.	VENDOR SHEET NO.	REV	DATE	VENDOR DRAWING TITLE
8.12 CONT			6953196-1	A1E1	A	11/29/83	CPU 2 PAGE - FRAME
			6953226	A1E1	A	11/29/83	CPU 3 PAGE - FRAME
			6959260-1	E3A72	E	9/11/92	PWB, MULTILAYER
			6964170-1	E3A71	A	10/10/91	PWB, MULTILAYER
			6966000-23	A032E003	R	8/5/91	GENERAL PURPOSE COMPUTER
			6966005-2	E2	C	1/5/88	RH CHASSIS
			6966006-2	E2	C	1/5/88	LH CHASSIS
			6966007-1	A1E2	B	9/18/87	REAR PLENUM ASSEMBLY
			6966008-1	A2E1	D	9/21/90	COVER, HEAT EXCHANGER
			6966009-2	A2E1	B	7/1/87	TOP COVER ASSEMBLY
			6966010-2	A2E2	D	4/12/88	BOTTOM COVER ASSEMBLY
			6966011-1	E3	C	6/9/86	FRONT PANEL ASSEMBLY
			6966012-2	A3E1A31	J	9/27/88	HARNESS ASSEMBLY
			6966013-2	D1	B	3/5/87	CONNECTOR, ALTERED
			6966015-20	A8E2A45	M	4/22/88	ELECTRICAL CONNECTION PANEL ASSEMBLY
			6966016-1	E1	A	5/9/85	SUPPORT PLATE
			6966022-21	A15E2A12	H	7/22/91	AD PAGE-PAGE ASSEMBLY
			6966023-1	E1	-	6/5/86	AD PAGE-FRAME
			6966025-20	A6E3A8	G	2/15/91	MIA PAGE-PAGE ASSEMBLY
			6966026-1	E1	-	8/16/84	MIA PAGE-FRAME
			6966030-21	A40E3A118	R	3/1/91	MICROSEQ/CONTROL PAGE-PAGE ASSEMBLY
			6966031-1	E1	-	6/28/84	MICROSEQ/CONTROL PAGE-FRAME
			6966035-20	A6E2A20	G	12/19/88	I/O BUFFER PAGE-PAGE ASSEMBLY
			6966040-21	A24E3A151	N	2/15/91	STATUS/INTERRUPT PAGE-PAGE ASSEMBLY
			6966045-20	A10E2A53	H	12/19/88	FLOW BOTTOM PAGE-PAGE ASSEMBLY
			6966050-20	A10E2A28	H	2/15/91	FLOW TOP PAGE-PAGE ASSEMBLY
			6966051-1	E1	A	8/1/84	FLOW TOP PAGE-FRAME
			6966055-20	A6E2A23	L	2/15/91	INTERFACE/MIA CONTROL PAGE-PAGE ASSEMBLY
			6966064-20	A5E3A9	K	2/15/91	CPU 1 PAGE-PAGE ASSEMBLY
			6966065-21	A40E3A93	R	2/15/91	INTERRUPT PAGE-PAGE ASSEMBLY
			6966066-21	A22E3A117	N	5/23/91	MMU 2 PAGE-PAGE ASSEMBLY
			6966067-21	A14E3A26	K	2/15/91	MMU 1 PAGE-PAGE ASSEMBLY
			6966068-21	A20E3A18	J	2/15/91	CPU 3 PAGE-PAGE ASSEMBLY
			6966069-20	A16E3A19	E	2/15/91	CPU 2 PAGE-PAGE ASSEMBLY
			6966070-22	A12E3A2	H	10/31/88	CMOS PAGE-PAGE ASSEMBLY
			6966070-23	A12E3A2	H	10/31/88	CMOS PAGE-PAGE ASSEMBLY
			6966072-1	E1	-	4/23/85	CMOS PAGE-FRAME-A SIDE
			6966073-22	A4E2	J	4/4/89	CMOS MEMORY SUBASSEMBLY B
			6966073-23	A4E2	J	4/4/89	CMOS MEMORY SUBASSEMBLY B
			6966074-1	E1	A	4/23/85	CMOS MEMORY SUBASSEMBLY B-FRAME
			6966079-22	A12E3A2	H	2/15/91	CMOS MEMORY SUBASSEMBLY A-FRAME
			6966079-23	A12E3A2	H	2/15/91	CMOS MEMORY SUBASSEMBLY A-FRAME
			6966081-20	A5A3	C	1/22/91	BATTERY BACKUP UNIT
			6966091-1	D1	-	7/31/85	IDENTIFICATION PLATE
			6966179	B45	-	7/23/86	LOGIC DIAGRAM
			6966189	B44	-	7/23/86	LOGIC DIAGRAM
			6966199	B56	-	7/23/86	LOGIC DIAGRAM
			6966209	B42	-	7/23/86	LOGIC DIAGRAM
			6966219	B62	-	7/23/86	LOGIC DIAGRAM
			6966249	B64	-	7/23/86	LOGIC DIAGRAM
			6966260-1	E2A42	-	1/14/85	PWB, MULTILAYER, B SIDE
			6967089-20	A4E2	H	2/22/91	EMI FILTER ASSEMBLY
			6967090-20	A2E1	C	11/2/87	+5V CONVERTER
			6967091-21	A4E1	D	5/19/89	12 V CONVERTER
			6967096-1	E2	A	3/28/85	FILTER FRAME
			6967097-1	D1	-	1/31/86	COVER
			106A869	B64	A	1/4/91	ARITHMETIC LOGIC DIAGRAM
			6966159	B59	-	7/23/86	ARITHMETIC LOGIC DIAGRAM
			6966239	B44	-	7/23/86	ARITHMETIC LOGIC DIAGRAM
			6966229	B40	-	7/23/86	ARITHMETIC LOGIC DIAGRAM
			106A899	B56	A	1/4/91	ARITHMETIC LOGIC DIAGRAM
			106A889	B50	A	1/4/91	ARITHMETIC LOGIC DIAGRAM
			106A909	B57	A	1/4/91	ARITHMETIC LOGIC DIAGRAM
			106A919	B49	A	1/4/91	ARITHMETIC LOGIC DIAGRAM
			6965920	B56	A	1/4/91	ARITHMETIC LOGIC DIAGRAM
			6965919	B55	A	1/4/91	ARITHMETIC LOGIC DIAGRAM
			6965922	B55	-	7/23/86	ARITHMETIC LOGIC DIAGRAM
			6965921	B51	-	7/23/86	ARITHMETIC LOGIC DIAGRAM
			6953329	B44	B	5/25/88	ARITHMETIC LOGIC DIAGRAM
			6953159	B46	B	5/25/88	ARITHMETIC LOGIC DIAGRAM
			6966149	B37	-	7/23/86	ARITHMETIC LOGIC DIAGRAM
			6965979	B35	-	7/23/86	ARITHMETIC LOGIC DIAGRAM
			121A579	B44	-	1/19/88	ARITHMETIC LOGIC DIAGRAM
			6966269	B48	-	7/23/86	ARITHMETIC LOGIC DIAGRAM

DWG	SIGNATURE	DATE	DWG	SIGNATURE	DATE
8.12	ENGR K. TERRY			ENGR	
	ENGR Kim Terry	9-24-94		ENGR	
	ENGR			ENGR	
	ENGR			ENGR	
	ENGR			APP Robert E. Floyd	9-27-94
	ENGR			APP	
	ENGR			APP	
	ENGR			LTR E PCN 4	

NATIONAL AERONAUTICS AND SPACE ADMINISTRATION
LYNDON B. JOHNSON SPACE CENTER HOUSTON, TEXAS

VENDOR DRAWING REFERENCES

SPACE SHUTTLE ALL | TBL NO 8-I

BASIC REV E-4

FOR DETAILED COMPONENT AND LOGIC INFORMATION REFER TO:

SSSH DWG NO.	SSSH DWG TITLE	VENDOR NAME	VENDOR DWG NO.	VENDOR SHEET NO.	REV	DATE	VENDOR DRAWING TITLE
8.12 CONT		RI	VS70-720212	1-2	F	7/27/92	MASS MEMORY AND COMPUTER INTERFACE
			VS70-720239	1-5	B	9/15/88	COMPUTER SYNCHRONIZATION AND FAIL STATUS
			VS70-720232	1-4	D	7/27/92	COMPUTER SYNC AND FAIL STATUS
			VS70-720242	1-3	C	7/27/92	COMPUTER DATA BUS INTERFACE
			VS70-720262	1-6	J	10/18/91	BACKUP FLIGHT CONTROLLER COMPUTER INTERFACE
			VS70-720269	1-6	F	10/18/91	BFC COMPUTER INTERFACE
			VS70-720519	1-2	C	10/6/88	INTERCOMPUTER DATA BUS ICB 01-05
			VS70-720512	1	C	7/27/92	ICC DATA BUS
			VS70-720539	1-2	A	11/11/88	DATA BUSES IP 1 - IP 5
			VS70-720542	1-3	B	1/20/83	WIRING DP AND S DATABUS BUB 01, BUB 05 THROUGH BUB 08
			VS70-720559	1-4	D	11/11/93	DATA BUS LBB 01 AND LBB 02
			VS70-720222	1-4	K	7/27/92	COMPUTER POWER AND CONTROLS
8.13	ENHANCED MULTIPLEXER/ DEMULTIPLEXER	ROCKWELL	VS70-720202	1-3	D	3/87	SCHEMATIC DIAGRAM - DATA PROCESSING & SOFTWARE FLT CONT MDM POWER & CONTROL
			VS70-720209	1-3	B	12/87	SCHEMATIC DIAGRAM - DATA PROCESSING & SOFTWARE FLT CONT MDM POWER & CONTROL
			VS72-948102	6-7,56-57	C/EO/ D15	6/87	INTEGRATED SYS SCHEMATIC SOLID ROCKET BOOSTER
			VS72-948099	6-7,56-57	N/C/EO/ A12	10/87	INTEGRATED SYS SCHEMATIC SOLID ROCKET BOOSTER
		SINGER/ KEARFOTT	Y214A367-01	1	A	4/75	SERIAL MIA
			Y215A030-02	1	B	2/75	SMIA CONTROL/TIMING HYBRID
			Y215A032-01	1-2	A	9/74	SMIA XMTR/RCVR HYBRID
			Y215A032-01	1-4	-	1/75	SMIA LSI MICROCIRCUIT HYBRID
		HONEYWELL/ SPERRY	4027158-902	1-2	A	4/77	MDM MIA INTERFACE MODULE SRB
			4027159-901	1-5	-	12/75	MDM SCU MODULE SRB
			4027160-902	1-5	-	5/77	MDM IOM PWR SUPPLY MODULE SRB
			4027161-901	1-2	-	12/75	MDM A/D CONVERTER MODULE SRB
			4027162-901	1-7	-	12/75	MDM I/O MODULE (SRB AID) SRB
			4027341-901	1-3	-	12/75	MDM I/O MODULE (SRB DIH) SRB
			4027342-901	1-5	-	9/77	MDM I/O MODULE (SRB DOL) SRB
		HONEYWELL	825807-901	1-5	A	3/89	EMDM SCU MODULE
			825805-901	1-4	-	3/89	EMDM CORE PWR SUPPLY
			8258081-901	1-2	-	3/89	EMDM A/D CONVERTER MODULE
			8258101-901	1-4	-	3/89	EMDM I/O MODULE (AID)
			8258091-901	1-5	-	3/89	EMDM I/O MODULE (AIS)
			8258151-901	1-5	-	3/89	EMDM I/O MODULE (DIL)
			8258131-901	1-5	-	3/89	EMDM I/O MODULE (DIH)
			8258141-901	1-5	-	3/89	EMDM I/O MODULE (DOL)
			8258121-901	1-5	-	3/89	EMDM I/O MODULE (DOH)
			8258111-901	1-5	-	3/89	EMDM I/O MODULE (AOD)
			8258161-901	1-5	-	3/89	EMDM I/O MODULE (SIO)
			8258171-901	1-5	-	3/89	EMDM I/O MODULE (TAC)
			8258061-901	1-2	A	3/89	EMDM MIA INTERFACE MODULE
			1901858	1-2	-	2/89	EMDM IOM POWER SUPPLY MODULE

DWG	SIGNATURE	DATE	DWG	SIGNATURE	DATE
8.12	ENGR K. TERRY			ENGR	
	ENGR Kim Terry	9-24-94		ENGR	
8.13	ENGR KATHY AKAGI			ENGR	
	ENGR Kathy Akagi	9/23/94		ENGR	
	ENGR			APP Robert S. Floyd	9-27-94
	ENGR			APP	
	ENGR			APP	
	ENGR			LTR E PCN 4	

NATIONAL AERONAUTICS AND SPACE ADMINISTRATION
LYNDON B. JOHNSON SPACE CENTER HOUSTON, TEXAS

VENDOR DRAWING REFERENCES

SPACE SHUTTLE | TBL NO 8-I
ALL

BASIC REV E-4

DATE: 05/04/96	NAME: LAM	VERSION: BPT: 9
DATE: 05/21/96	NAME: MDU	VERSION: INH: 12
DATE: 06/13/96	NAME: BJT	VERSION: INH: 13

ADI SCALE SELLECTION (01-25 AND SUBS)

OPS MAJOR MODE	SWITCH POSITION	FULL SCALE VALUE ATTITUDE RATE ROLL	PITCH	YAW	ATTITUDE ERROR R	P	Y
101-106 601		deg/sec	deg/sec	deg/sec	deg	deg	deg
201, 202	HIGH	10	10	10	10	10	10
801	MED	5	5	5	5	5	5
301-303	LOW	1	1	1	1	1	1
304 602 IPH=4,6		deg/sec	deg/sec	deg/sec	deg	deg	deg
	HIGH	10	10	10	25	5	2.5
	MED	5	5	5	25	2	2.5
	LOW	1	1	1	10	1	2.5
602 IPH=5		deg/sec	deg/sec	deg/sec	deg	G	deg
	HIGH	10	10	10	25	1.25	2.5
	MED	5	5	5	25	1.25	2.5
	LOW	1	1	1	10	0.5	2.5
305 603					deg	G	deg
	HIGH	[5 deg/s]	[5 deg/s]	[5 DEG]	25	1.25	2.5
S-TURN & ACQUISITION PHASES	MED*	TIME TO HAC [10 SEC]	ALTITUDE ERR [±5 kft]	HEADING ERR [±5 DEG]	25	1.25	2.5
(1PH≤ 1)	LOW	[5 deg/s]	[5 deg/s]	[5 DEG]	10	0.50	2.5
305 603					deg	G	deg
	HIGH	[5 deg/s]	[5 deg/s]	[5 deg/s]	25	1.25	2.5
HEADING ALIGNMENT PHASE	MED*	TIME TO HAC [10 SEC]	ALTITUDE ERR [±5 kft]	RADIAL ERR [±5 kft]	25	1.25	2.5
(1PH=2)	LOW	[5 deg/s]	[5 deg/s]	[5 deg/s]	10	0.50	2.5
305 603					deg	G	deg
	HIGH	[5 deg/s]	[5 deg/s]	[5 deg/s]	25	1.25	2.5
PREFINAL PHASE (1PH=3)	MED*	W/A-STOWED	ALTITUDE ERR [±1 kft]	Y-POSN ERR [±1 kft]	25	1.25	2.5
	LOW	[5 deg/s]	[5 deg/s]	[5 deg/s]	10	0.50	2.5
305 603					deg	G	deg
TG_ END=TRUE	HIGH	[5 deg/s]	[5 deg/s]	[5 deg/s]	25	1.25	2.5
ALT_WHEELS ≥ H_BLANK	MED*	W/A-STOWED	ALTITUDE ERR [±1 kft]	Y-POSN ERR [±1 kft]	25	1.25	2.5
WOWLON=0	LOW	[5 deg/s]	[5 deg/s]	[5 deg/s]	10	0.50	2.5
305 603					deg	G	deg
TG_ END=TRUE	HIGH	[5 deg/s]	[5 deg/s]	[5 deg/s]	25	1.25	2.5
ALT_WHEELS < H_BLANK	MED*	W/A-STOWED	[5 deg/s]	W/A-STOWED	25	1.25	2.5
and 1-loaded timer not expired	LOW	[5 deg/s]	[5 deg/s]	[5 deg/s]	10	0.50	2.5
WOWLON=0							
305 603					deg	G	deg
TG_ END=TRUE	HIGH	[5 deg/s]	[5 deg/s]	[5 deg/s]	25	1.25	2.5
ALT_WHEELS < H_BLANK	MED*	[5 deg/s]	[5 deg/s]	[5 deg/s]	25	1.25	2.5
and 1-loaded timer expired	LOW	[5 deg/s]	[5 deg/s]	[5 deg/s]	10	0.50	2.5
WOWLON=0							
305 603					deg	G	deg
	HIGH	[5 deg/s]	[5 deg/s]	[5 deg/s]	20	10	2.5
WOWLON=1	MED	[5 deg/s]	[5 deg/s]	[5 deg/s]	5	5	2.5
	LOW	[5 deg/s]	[5 deg/s]	[5 deg/s]	1	1	2.5

* ASSUMES THAT THE 1-LOAD, DISPLAY OPTION, IS ON FOR THE ADI RATE POINTERS TO DISPLAY TAEM CUES WITH THE ADI RATE SWITCH IN THE MED SETTING. IF DISPLAY OPTION=OFF, THE ADI MED RATE DISPLAYS THE DEFAULT MEDIUM RATES OF 5 deg/sec.

GUIDANCE CUES DISPLAYED IN MM305/603 FOR MEDIUM ADI RATE SWITCH SETTING:
TIME TO HAC INTERCEPT (TANGENCY) — RADIAL ERROR FROM DESIRED HAC POSITION
ALTITUDE ERROR WRT GUIDANCE COMPUTED SPIRAL HAC — Y-POSITION ERROR IN RUNWAY COORDINATES
HEADING ERROR WRT HAC INTERCEPT — W/A-INDICATES NEEDLE STOWED

NOTE: SQUARE [] BRACKETS PROVIDE THE 1-LOADED FULL SCALE DEFLECTION VALUE OF THE DESIRED PARAMETER (VERIFY THE CURRENT 1-LOAD VALUE IN JSC-19350, THE 1-LOAD REQUIREMENTS DOCUMENT)

10. DDU DOES NOT REQUIRE COOLING

△ PWR SUPPLY 'D' FAILURE NOT DETECTED BY DDU GOOD DISCRETE ON TLM

8. DEFAULT POSITIONS OF SIMPLEX SWITCHES ARE DESIGNATED BY A DECAL '●'

△ SEE DWG 9.17 NOTE 4 FOR SENSE SWITCH APPLICATION

△ ALL FLAGS WILL BE VISIBLE WHEN POWER IS OFF

△ ERROR NEEDLES AND RATE POINTERS ARE SHOWN IN ZERO POSITION. NEEDLES ARE SPRING LOADED AND WILL BE OUTSIDE THE FIELD OF VIEW WHEN POWER IS OFF OR WHEN DRIVE TO STOW POSITION WITH A MINUS 7.25V ANALOG SIGNAL FROM THE DDU

△ THE DISPLAYS ARE DRIVEN BY SIGNALS FROM THE DATA BUS SELECTED BY THE DATA BUS SWITCHES AS FOLLOWS:
DATA BUS- 1, 2, 3, OR 4
MS1- 10 DATA WORDS
ADI- 14 DATA WORDS
AVVI- 6 DATA WORDS
AMI- 6 DATA WORDS
MIA 1 WILL BE SELECTED FOR INCONSISTANT DATA BUS SELECT INPUTS

△ THE SIGNAL FLOW IS FROM THE GPC'S TO DDU 5, THEN TO THE DISPLAYS. THE SYMBOL ⟨DDU⟩ IS USED HERE TO PROVIDE A CONVENIENT MEANS OF ASSOCIATING THE PML NUMBERS AND TLM WITH THEIR RESPECTIVE SIGNALS THAT ARE ACTUALLY GENERATED IN THE GPC'S

△ THE ALT ACCEL IS PRESENTED BY MEANS OF A MOVING POINTER DISPLAYED AGAINST A FIXED SCALE. THE OTHER THREE INDICATORS (ALT, RDR ALT AND ALT RATE) PRESENT THE DATA BY A MOVING TAPE SCALE BEHIND A FIXED LUBBER LINE

NOTES: △ THE ANGLE OF ATTACK (ALPHA) IS PRESENTED BY MEANS OF A MOVING POINTER AND MOVING TAPE SCALE. THE POINTER INDICATES AN ANGLE OF ATTACK BETWEEN MINUS 3.33 AND PLUS 23.33 DEGREES, WHEN THE ANGLE OF ATTACK CONTINUES TO INCREASE BEYOND THE POINTER RANGE, THE TAPE SCALE WILL MOVE WHILE THE POINTER REMAINS FIXED. THE OTHER THREE INDICATORS (ACCEL, M/VEL AND EAS) PRESENT THE DATA BY A MOVING TAPE SCALE BEHIND A FIXED LUBBER LINE

1 G&C DISP 1

SIGNATURE	DATE	NATIONAL AERONAUTICS AND SPACE ADMINISTRATION LYNDON B. JOHNSON SPACE CENTER HOUSTON, TEXAS
DSGN L. BUCHANAN	3/30/79	
DR L. BUCHANAN	8/14/79	
ENGR M. SARAFIN		G&C DEDICATED DISPLAYS
ENGR		
APP		
APP		
APP		
LTR E	PCN 6	SPACE SHUTTLE / ALL / DWG NO 9.1 / 126.5 X 34 / PAGE / SHEET 1 OF 2

BASIC REV E-6

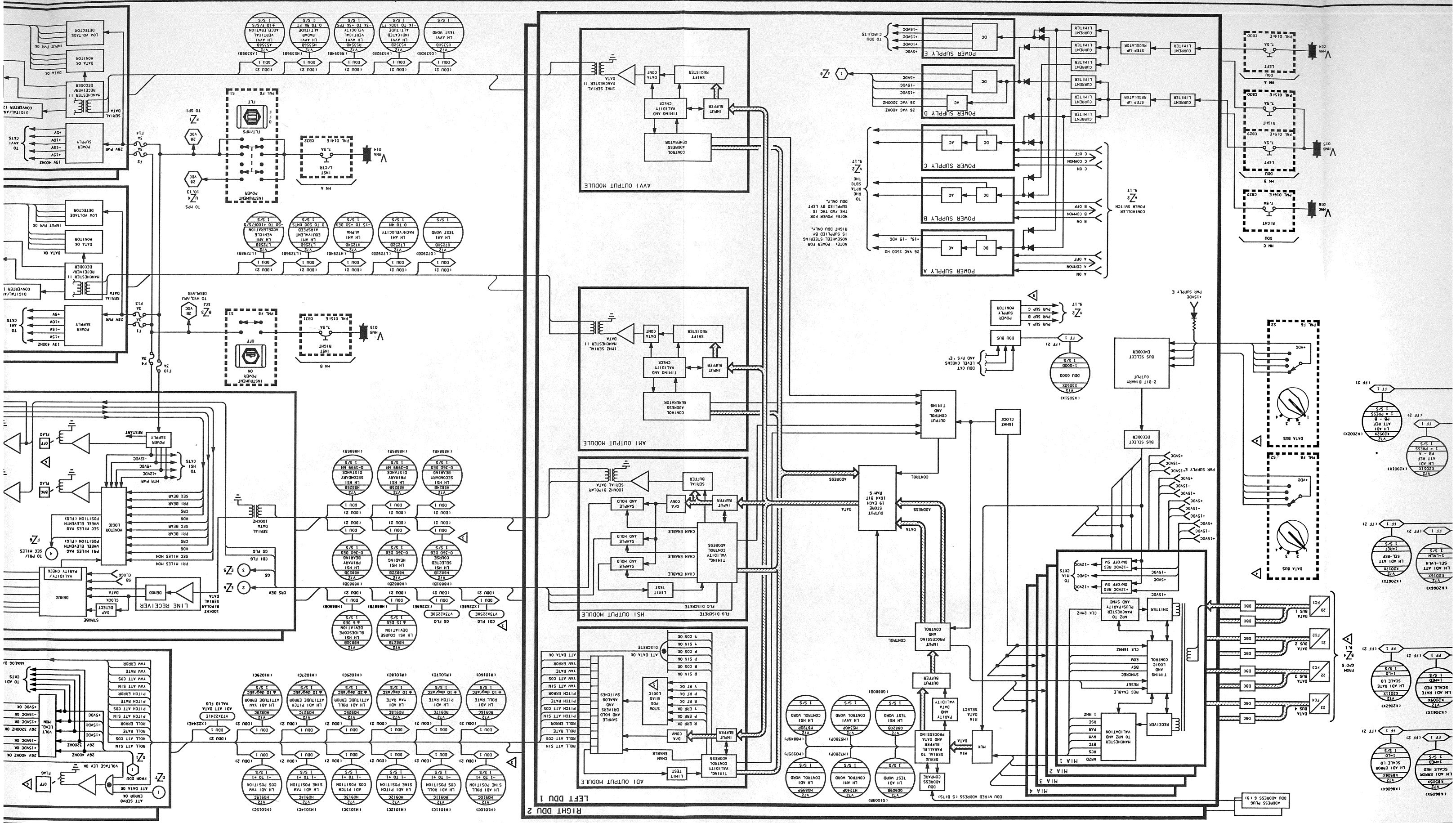
RIGHT DDU 2
LEFT DDU 1
AVVI OUTPUT MODULE
AMI OUTPUT MODULE
ADI OUTPUT MODULE
HSI OUTPUT MODULE
FLG DISCRETE
IMAT SERIAL MANCHESTER II DATA
CONTROL ADDRESS GENERATOR
TIMING AND VALIDITY CHECK
INPUT BUFFER
SHIFT REGISTER
DATA CONT
DATA OUT
SERIAL BIPOLAR DATA
100KHZ SERIAL DATA
SAMPLE AND HOLD
D/A CONV
CHAN ENABLE
LIMIT TEST
STROBE
DEMOD
LINE RECEIVER
VALIDITY PARITY CHECK
DEMUX
CLOCK
DATA
SB
CMS
GS
COI FLG
GS FLG
GS DEV
ATT DATA OK
ATT SERVO ERROR OK
VOLTAGE LEV OK
FLAG
OFF
RESTART
POWER SUPPLY
MTR PWR
+12VDC
-12VDC
+5VDC
MONITOR LOGIC
SEC MILES MAG
SEC WHEEL ELEVETN POSITION (FLD)
PRI MILES MAG
PRI WHEEL ELEVETN POSITION (FLD)
SEC MILES NON
PRI MILES NON
SEC BEAR
PRI BEAR
SEC BEAR
PRI BEAR
HDG
CMS
SEC MILES
PRI MILES
TO RELY
SEC MILES
ROLL ATT SIN
ROLL ATT COS
ROLL RATE
ROLL ERROR
PITCH ATT SIN
PITCH ATT COS
PITCH RATE
PITCH ERROR
YAW ATT SIN
YAW ATT COS
YAW RATE
YAW ERROR
SAMPLE AND HOLD DRIVERS AND ANALOG SWITCHES
STDV POS BIAS LOGIC
DISCRETE
ATT DATA OK
Y SIN OK
Y COS OK
P SIN OK
P COS OK
R SIN OK
R COS OK
P ERR OK
R ERR OK
Y RT OK
P RT OK
R RT OK
TIMING, VALIDITY CONTROL ADDRESS
TIMING, VALIDITY CHECK
CONTROL ADDRESS GENERATION
OUTPUT CONTROL AND TIMING
16MHZ CLOCK
CONTROL
ADDRESS
DATA
OUTPUT STORE 19 EACH 16X4 BIT RAM'S
DDU WIRED ADDRESS (5 BITS)
DDU ADDRESS CHANGE
DEMUX SERIAL TO PARALLEL BUFFER AND DATA PROCESSING
MUX
MIA
PARITY AND DATA VALIDITY
DATA SELECT
INPUT PROCESSING AND CONTROL
OUTPUT BUFFER
MIA 1
MIA 2
MIA 3
MIA 4
MCP0 MANCHESTER TO MRT AND VALIDATION
MCP1 MANCHESTER PARITY AND SYNC
MCP2 MANCHESTER PULSE/PARITY AND SYNC
RECEIVER
1 MHZ
REC ENABLE
RESET
SYNCSEC
BSY
EOW
TIMING AND LOGIC CONTROL
CLK 15MHZ
CLK 2MHZ
XMITTER
BUS SELECT ENCODER
2-BIT BINARY OUTPUT
BUS SELECT DECODER
DATA BUS
ADDRESS PLUG
DDU ADDRESS 6 (9)
DDU GOOD
DDU BUS
DDU CKT LEVEL CHECKS AND P/S 'E'
POWER SUPPLY MONITOR
PWR SUP A
PWR SUP B
PWR SUP C
PWR SUPPLY E
+15VDC
+5VDC
CONTROLLER POWER SWITCH
A ON
A OFF
A COMMON
B ON
B OFF
B COMMON
C ON
C OFF
C COMMON
POWER SUPPLY A
POWER SUPPLY B
POWER SUPPLY C
POWER SUPPLY D
POWER SUPPLY E
+15VDC, -15 VDC
+5VDC
-15VDC
+10VDC
26 VAC 400HZ
26 VAC 320HZ
26 VAC 1500 HZ
NOTES POWER FOR THE FWD THC IS SUPPLIED BY LEFT DDU ONLY.
NOTES POWER FOR NOSWHEEL STEERING IS SUPPLIED BY RIGHT DDU ONLY.
TO HMC SBIC HPTA THC
TO DDU CIRCUITS
CURRENT LIMITER
STEP UP REGULATOR
PWR SUPPLY E
+15VDC
+5VDC
-15VDC
+10VDC
+12VDC
-12VDC
+12VDC REG ON/OFF SW
+12VDC REG ON/OFF SW
TO MIA CKTS
CLK 2MHZ
CLK 15MHZ
DBC
FC1
FC2
FC3
FC4
DATA BUS 1
DATA BUS 2
DATA BUS 3
DATA BUS 4
FROM GPC'S
TO GPC'S
DDU 1
DDU 2
DDU 3
DDU 4
DDU 5
DDU 6
DDU 7
DDU 8
DDU 9
DDU 10
DDU 11
DDU 12
DDU 13
DDU 14
DDU 15
DDU 16
DDU 17
DDU 18
DDU 19
DDU 20
DDU 21
DDU 22
DDU 23
DDU 24
DDU A
DDU B
DDU C
DDU D
DDU E
LEFT
RIGHT
CB30
CB29
CB22
CB16
CB31
CB32
CB33
CB34
PWR DISTR
INSTRUMENT POWER ON
INSTRUMENT POWER
FLT/HPS
INST L/GEAR
INST
RIGHT
OFF
FUSE
F1
F2
F3
F4
F10
F14
3A
28V PWR
28 VDC
115 VAC 400HZ
10 HPS
10 SPI
10 HYD, AUD DISPLAYS
TO CRT'S
POWER SUPPLY
+5V
+10V
-15V
+15V
INPUT PWR OK
DATA OK MONITOR
LOW VOLTAGE DETECTOR
SERIAL DATA
MANCHESTER II RECEIVER DECODER
CONVERTER 12
DISCRETE/ANALOG
13V 400HZ
LH AMI TEST WORD
LH AVVI TEST WORD
LH AMI VERTICAL VELOCITY
LH AMI ALTITUDE
LH AMI AIRSPEED
LH AMI ACCELERATION
LH AVVI VERTICAL VELOCITY
LH AVVI ALTITUDE
LH AVVI ACCELERATION
-1K TO 10K FT
-5K TO +5K FPS
0 TO 5K FT
0 TO 500 KNTS
-50 TO +100KTS/S
-15 TO +50 DEG
0 TO 4M
-1 TO +1
-10 TO +10 DEG
0 TO 360 DEG
-180 TO +180 DEG
-5999 NM
0-3999 NM
0-360 DEG
0 TO 20 DEG/SEC
-20 TO +20 DEG/SEC
-10 TO +10 DEG/SEC
-5 TO +5 DEG/SEC
-2 TO +2 DEG/SEC
-1 TO +1
LH HSI PRIMARY DEVIATION
LH HSI COURSE DEVIATION
LH HSI GLIDESCOPE DEVIATION
LH HSI SELECTED COURSE
LH HSI HEADING
LH HSI PRIMARY BEARING
LH HSI SECONDARY BEARING
LH HSI SECONDARY DISTANCE
LH HSI PRIMARY DISTANCE
LH AMI CONTROL WORD
LH AVVI CONTROL WORD
LH ADI CONTROL WORD
LH ADI ROLL SINE POSITION
LH ADI ROLL COS POSITION
LH ADI PITCH SINE POSITION
LH ADI PITCH COS POSITION
LH ADI TAN SINE POSITION
LH ADI TAN COS POSITION
LH ADI VAN ATTITUDE ERROR
LH ADI PITCH ATTITUDE ERROR
LH ADI ROLL ATTITUDE ERROR
LH ADI VAN RATE
LH ADI PITCH RATE
LH ADI ROLL RATE
ADI ATT DATA VALID FLG
1MAT SERIAL MANCHESTER II DATA
100KHZ BIPOLAR SERIAL DATA
ATT DATA OK
VOLT LEVEL
+15VDC
-15VDC
26V 400HZ
26V 320HZ
+5VDC
-5VDC
+26VDC
-26VDC
+15VDC OK
-15VDC OK
26V 400HZ OK
26V 320HZ OK
+5VDC OK
-5VDC OK
+26VDC OK
-26VDC OK
ANALOG DATA
TO ADI CKTS
(X22446)
(X22447)
(X22448)
(X22449)
(X22450)
(X22451)
(X22452)
(X22453)
(X22454)
(X22455)
(X22456)
(X22457)
(X22458)
(X22459)
(X22460)
(X22461)
(X22462)
(X22463)
(X22464)
(X22465)
(X22466)
(X22467)
(X22468)
(X22469)
(X22470)
(X22471)
(X22472)
(X22473)
(X22474)
(X22475)
(X22476)
(X22477)
(X22478)
(X22479)
(X22480)
(X22481)
(X22482)
(X22483)
(X22484)
(X22485)

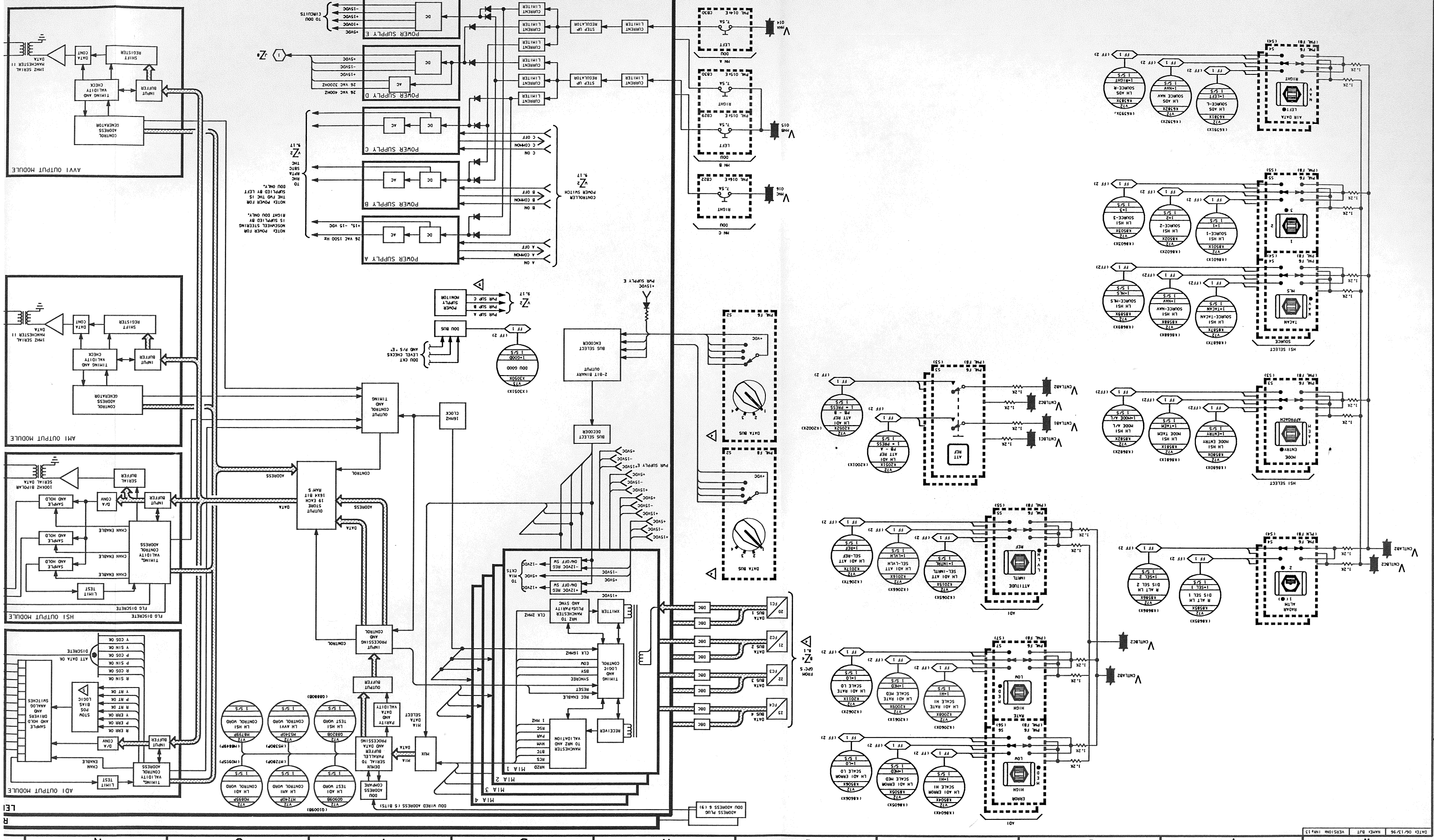
POWER SUPPLY A
POWER SUPPLY B
POWER SUPPLY C
POWER SUPPLY D
POWER SUPPLY E
CONTROLLER POWER SWITCH
CURRENT LIMITER
STEP UP REGULATOR
DOU
AVV1 OUTPUT MODULE
AH1 OUTPUT MODULE
HS1 OUTPUT MODULE
AD1 OUTPUT MODULE
INPUT BUFFER
OUTPUT BUFFER
INPUT PROCESSING AND CONTROL
TIMING AND CONTROL
OUTPUT CONTROL AND TIMING
BUS SELECT DECODER
2-BIT BINARY OUTPUT
HAMCHESTER TO NRZ AND VALIDATION
SERIAL TO PARALLEL AND BUFFER PROCESSING
PARITY AND DATA VALIDITY
MUX
MIA DATA SELECT
DOU WIRED ADDRESS (5 BITS)
ADDRESS PLUG
DOU ADDRESS 6 (9)
DATA BUS 1
DATA BUS 2
DATA BUS 3
DATA BUS 4
FROM GPC'S
TO GPC'S
MIA 1
MIA 2
MIA 3
MIA 4
SOURCE
HSI SELECT
AIR DATA
TACAN
RADAR ALTM
ATTITUDE
RATE
ERROR
ADI
CNTLA1
CNTLA2
CNTLB1
CNTLB2
CONTROL ADDRESS GENERATOR
SHIFT REGISTER
TIMING AND VALIDITY CHECK
1MHZ SERIAL MANCHESTER II DATA
100KHZ BIPOLAR SERIAL DATA
SAMPLE AND HOLD
D/A CONV
CHAN ENABLE
LIMIT TEST
FLG DISCRETE
DISCRETE
STDV POS BIAS LOGIC
SAMPLE AND HOLD DRIVERS AND ANALOG SWITCHES
ATT DATA OK
R SIN OK
R COS OK
P SIN OK
P COS OK
Y SIN OK
Y COS OK
R ERR OK
R RT OK
P ERR OK
P RT OK
Y ERR OK
Y RT OK
LH HSI CONTROL WORD
LH AVVI CONTROL WORD
LH AH1 CONTROL WORD
LH AD1 CONTROL WORD
LH HSI TEST WORD
LH AD1 TEST WORD
DOU 0000
DOU CNT LEVEL CHECKS AND P/S "E"
PWR SUPPLY E +15VDC
+5VDC
+15VDC
-15VDC
-12VDC
+12VDC
+28VDC
CLK 2MHZ
CLK 16MHZ
1 MHZ
ADDRESS
DATA
CONTROL
26 VAC 400HZ
26 VAC 3200HZ
26 VAC 1500 HZ
+15, -15 VDC
10 MIA CKTS
TO DOU CIRCUITS
NOTES: POWER FOR THE SBIC FROM THE DOU ONLY.
NOTES: POWER FOR MSC IS SUPPLIED BY RIGHT DOU ONLY.
NOTES: POWER FOR THE SBIC IS SUPPLIED BY LEFT DOU ONLY.
DOU A
DOU B
DOU C
DOU D
DOU E
LEFT
RIGHT
7.5A
CB30
CB29
CB22
CB21
PWL 01-4E
PWL 01-5E
PWL 01-6E
PWL 01-7E
PWL F6
PWL F8
S1
S2
S3
S4
S5
S6
S7
S8
S9
S10
S11
S12
S13
S14
S15
S16
S17
S18
S19
S20
S21
S22
S23
S24
S25
S26
S27
S28
S29
S30
S31
S32
S33
S34
S35
S36
S37
S38
S39
S40

DATE: 05/10/96	NAME: LAM	VERSION: BPT: 4
DATE: 05/20/96	NAME: MDU	VERSION: BPT: 5
DATE: 06/13/96	NAME: BJT	VERSION: INK: 8

AFT ADI

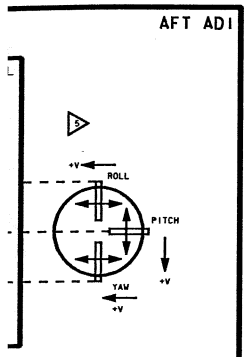

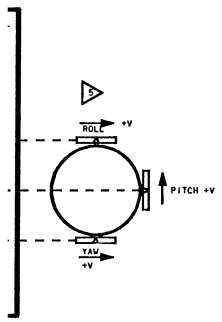

Z

F6

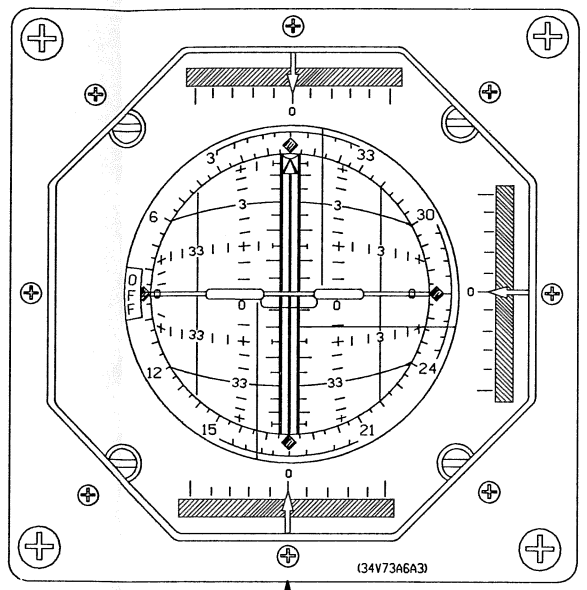

PNL F6
(PNL F8) (PNL A6)

0 TO 5 VAC
LAMP PWR

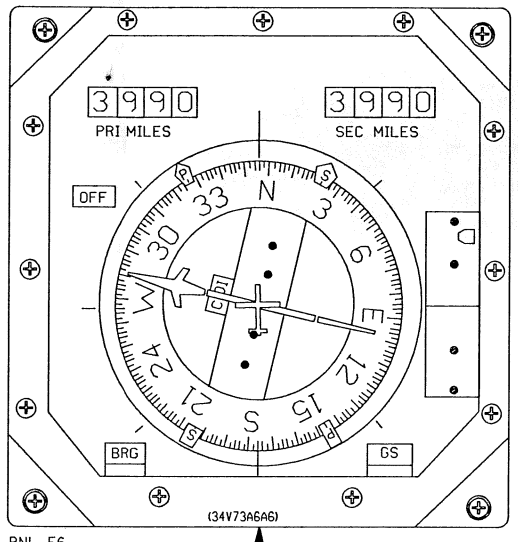

PNL F6
(PNL F8)

0 TO 5VAC
LAMP PWR

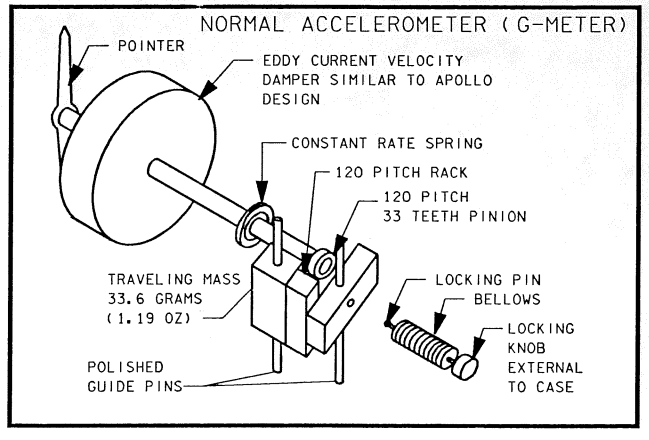

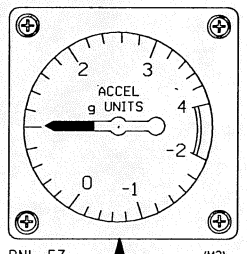

PNL F7 (M3)

0 TO 5VAC
LAMP PWR

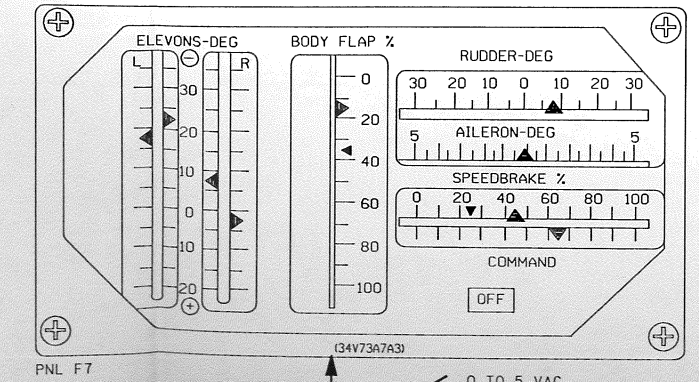

PNL F7

0 TO 5 VAC
LAMP PWR

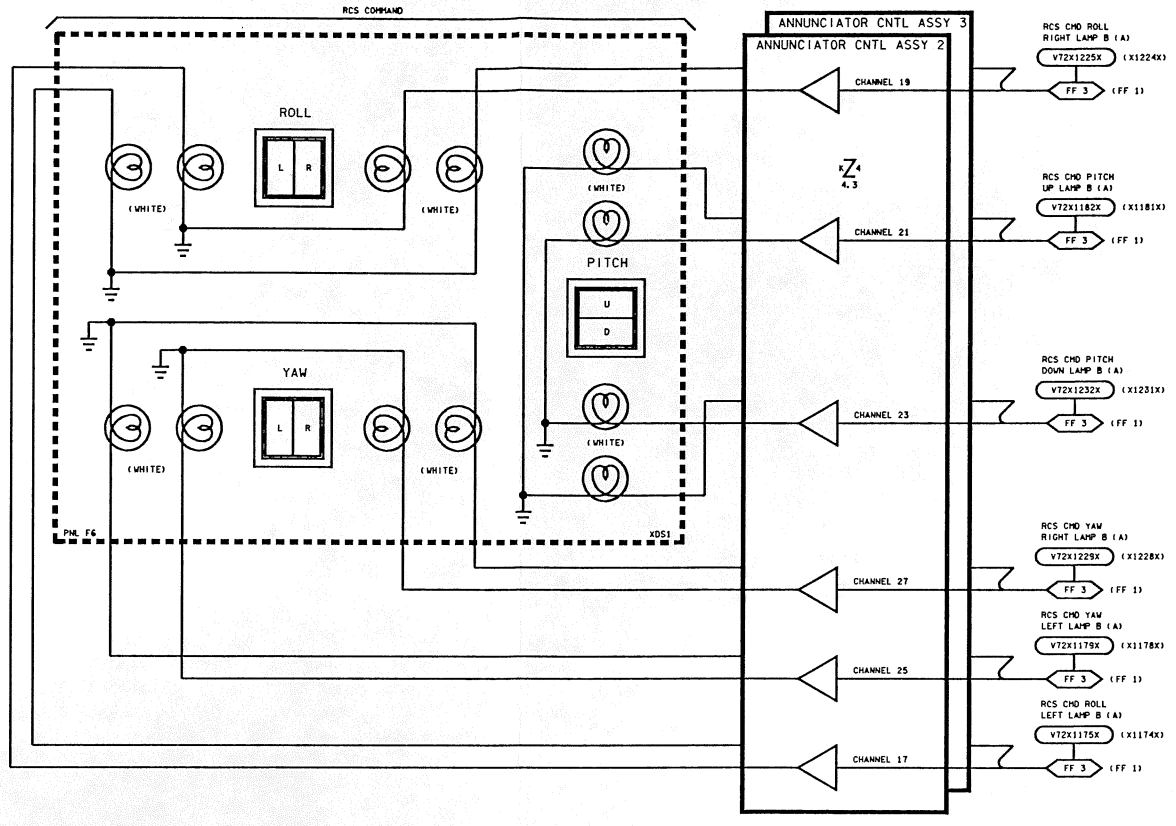

DEDICATED DISPLAYS CHECKOUT - GNC 8
LIMIT VALUES

	(PARAMETER)		(UNITS)	(HIGH)	(LOW)
F6 (F8)	AMI:	ALPHA	DEG	+30	+2
		ACCEL	FPS 2	+30	+20
		M/VEL	FPS	3K	20K
		EAS	KNOTS	300	20
F6 (F8) (A1)	ADI:	R ATT	DEG	300	20
		P ATT	DEG	300	20
		Y ATT	DEG	300	20
		R RATE	MKS	3R	2L
		P RATE	MKS	3U	2D
		Y RATE	MKS	3R	2L
		R ATT ERR	MKS	3R	2L
		P ATT ERR	MKS	3U	2D
		Y ATT ERR	MKS	3R	2L
F6 (F8)	AVVI:	ALT ACCEL	FPS 2	+3	-2
		ALT RATE	FPS	+300	-200
		ALT	FT	300K	200
		RDR ALT	FT	3K	200
F6 (F8)	HSI:	SEL COURSE	DEG	30	200
		HEADING	DEG	300	20
		PRI BEAR	DEG	30	20
		SEC BEAR	DEG	300	200
		PRI MILES	NM	3000	200
		SEC MILES	NM	3000	200
		COURSE DEV	R/L DOT	15● R	15● L
		G/S DEV	U/D DOT	15● U	15● D
F7	SPI:	ELEVONS L OB	DEG	-30	-20
		IB	DEG	-30	-20
		R IB	DEG	-30	-20
		OB	DEG	-30	-20
		BODY FLAP	%	30	20
		RUDDER	DEG	3R	20L
		AILERON	DEG	3R	20L
		SPEEDBRAKE	%	30	20
		SPD BRK CMD	%	30	20

NOTES: 1. SEE SHEET 1 FOR APPLICABLE NOTES

G&C DISP 2

SIGNATURE		DATE	NATIONAL AERONAUTICS AND SPACE ADMINISTRATION LYNDON B. JOHNSON SPACE CENTER HOUSTON, TEXAS
DSGN	TERRI FORSYTHE	6/4/79	
DR			
ENGR	M. SARAFIN	8/13/80	G&C DEDICATED DISPLAYS
ENGR		6/19/96	
APP		6/25/96	
APP		7/3/96	SPACE SHUTTLE ALL — DWG NO 9.1
CCB		7/19/96	
LTR	E	DCN 6	126.5 X 34 — PAGE SHEET 2 OF 2

BASIC REV E-6

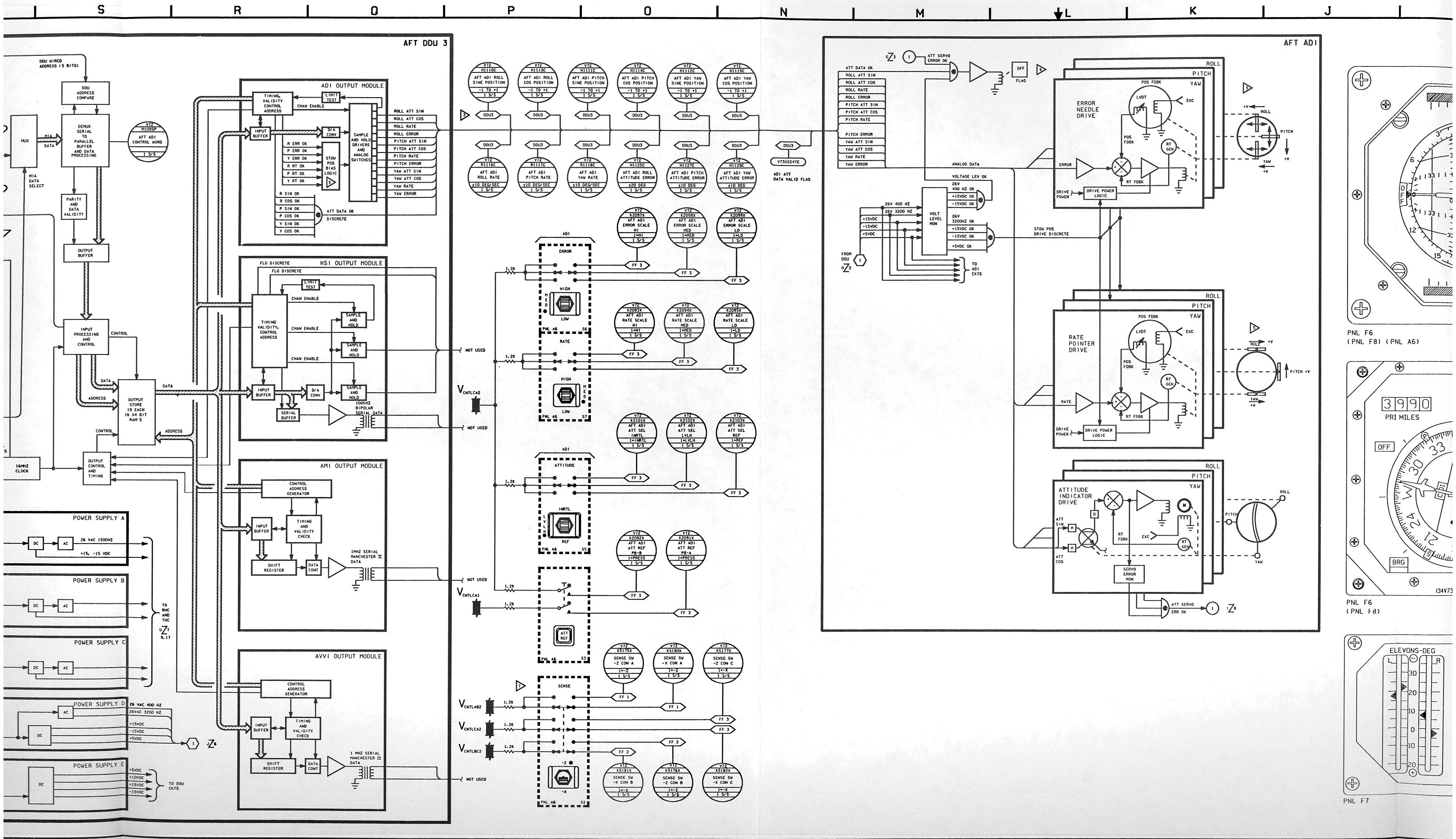

S R O P O N M L K J
AFT DDU 3
AFT ADI
ADI OUTPUT MODULE
HSI OUTPUT MODULE
AMI OUTPUT MODULE
AVVI OUTPUT MODULE
POWER SUPPLY A
POWER SUPPLY B
POWER SUPPLY C
POWER SUPPLY D
POWER SUPPLY E
ERROR NEEDLE DRIVE
RATE POINTER DRIVE
ATTITUDE INDICATOR DRIVE
PNL F6
(PNL F8) (PNL A6)
PNL F6
(PNL F8)
PNL F7
ELEVONS-DEG

DATE: 06/13/96 | NAME: BJT | VERSION#: INK: 8

AFT DDU 3

ADDRESS PLUG
DDU ADDRESS 15

DDU WIRED
ADDRESS (5 BITS)

DDU
ADDRESS
COMPARE

MIA 4
MIA 3
MIA 2
MIA 1

MANCHESTER
TO NRZ
AND
VALIDATION

MRZD
RCS
BTC
NVM
PAR
RSC
1 MHZ

RECEIVER

TIMING
AND
LOGIC
CONTROL

REC ENABLE
RESET
SYNCREC
BSY
EOM
CLK 16MHZ

XMITTER

NRZ TO
MANCHESTER
PLUS PARITY
AND SYNC

CLK
2MHZ

MUX

MIA
DATA

MIA
DATA
SELECT

DEMUX
SERIAL
TO
PARALLEL
BUFFER
AND DATA
PROCESSING

V72
H1095P
AFT ADI
CONTROL WORD
1 S/S

PARITY
AND
DATA
VALIDITY

OUTPUT
BUFFER

INPUT
PROCESSING
AND
CONTROL

CONTROL

DATA

ADDRESS

OUTPUT
STORE
19 EACH
16 X 4 BIT
RAM'S

DATA

ADDRESS

CONTROL

OUTPUT
CONTROL
AND
TIMING

16MHZ
CLOCK

DDU
CKT
LEVEL
CHECKS
AND P/S
"E"

DDU BITE

V73
K3052X
DDU GOOD
1=GOOD
1 S/S

FF3

PWR SUP A
PWR SUP B
PWR SUP C

POWER
SUPPLY
MONITOR

Z6
9.17

FROM GPC'S
B3
R1

DATA BUS 4
DATA BUS 3
DATA BUS 2
DATA BUS 1

23 FC4
22 FC3
21 FC2
20 FC1

DBC

+15VDC
+5VDC
-15VDC

+12VDC REG
ON/OFF SW

-12VDC REG
ON/OFF SW

+12VDC
+5VDC
-12VDC

TO
MIA
CKTS

+15VDC
-15VDC
+5VDC

PWR SUPPLY E
(4 LINES EACH)

BUS SELECT
DECODER

2-BIT BINARY
OUTPUT

BUS SELECT
ENCODER

750Ω

+15VDC
PWR SUPPLY E

DATA BUS

+VDC
1
2
3
4

PNL A6 S1

CONTROLLER
POWER SWITCH

Z7
9.17

A ON
A COMMON
A OFF

B ON
B COMMON
B OFF

C ON
C COMMON
C OFF

POWER SUPPLY A
DC
AC
26 VAC 1500HZ
+15, -15 VDC

POWER SUPPLY B
DC
AC

POWER SUPPLY C
DC
AC

TO
RHC
AND
THC

U Z7
9.17

POWER SUPPLY D
AC
DC
26 VAC 400 HZ
26VAC 3200 HZ
+15VDC
-15VDC
+5VDC

1
Z6

POWER SUPPLY E
DC
+5VDC
+10VDC
+15VDC
-15VDC

TO DDU
CKTS

CURRENT
LIMITER

STEP UP
REGULATOR

MMC
DDU
AFT
7.5A
PNL O16+E CB23

MMC
O16+E

MMA
DDU
AFT
7.5A
PNL O14+E CB31

MMA
O14+E

ADI OUTPUT MODULE

TIMING,
VALIDITY
CONTROL
ADDRESS

LIMIT
TEST

CHAN ENABLE

INPUT
BUFFER

D/A
CONV

R ERR OK
P ERR OK
Y ERR OK
R RT OK
P RT OK
Y RT OK

STOW
POS
BIAS
LOGIC

SAMPLE
AND HOLD
DRIVERS
AND
ANALOG
SWITCHES

R SIN OK
R COS OK
P SIN OK
P COS OK
Y SIN OK
Y COS OK

ATT DATA OK
DISCRETE

ROLL ATT SIN
ROLL ATT COS
ROLL RATE
ROLL ERROR
PITCH ATT SIN
PITCH ATT COS
PITCH RATE
PITCH ERROR
YAW ATT SIN
YAW ATT COS
YAW RATE
YAW ERROR

HSI OUTPUT MODULE

FLG DISCRETE
FLG DISCRETE

TIMING
VALIDITY
CONTROL
ADDRESS

LIMIT
TEST

CHAN ENABLE
CHAN ENABLE
CHAN ENABLE

SAMPLE
AND
HOLD
SAMPLE
AND
HOLD

INPUT
BUFFER

D/A
CONV

SAMPLE
AND
HOLD

SERIAL
BUFFER

100KHZ
BIPOLAR
SERIAL DATA

AMI OUTPUT MODULE

CONTROL
ADDRESS
GENERATOR

INPUT
BUFFER

TIMING
AND
VALIDITY
CHECK

SHIFT
REGISTER

DATA
CONT

1MHZ SERIAL
MANCHESTER II
DATA

AVVI OUTPUT MODULE

CONTROL
ADDRESS
GENERATOR

INPUT
BUFFER

TIMING
AND
VALIDITY
CHECK

SHIFT
REGISTER

DATA
CONT

1 MHZ SERIAL
MANCHESTER II
DATA

V72 H1110C AFT ADI ROLL SINE POSITION -1 TO +1 1 S/S
V72 H1113C AFT ADI ROLL COS POSITION -1 TO +1 1 S/S
V72 H1111C AFT ADI PITCH SINE POSITION -1 TO +1 1 S/S
V72 H1114C AFT ADI PITCH COS POSITION -1 TO +1 1 S/S
V72 H1112C AFT ADI YAW SINE POSITION -1 TO +1 1 S/S
V72 H1115C AFT ADI YAW COS POSITION -1 TO +1 1 S/S

DDU3

V72 R1116C AFT ADI ROLL RATE ±10 DEG/SEC 1 S/S
V72 R1117C AFT ADI PITCH RATE ±10 DEG/SEC 1 S/S
V72 R1118C AFT ADI YAW RATE ±10 DEG/SEC 1 S/S
V72 H1125C AFT ADI ROLL ATTITUDE ERROR ±20 DEG 1 S/S
V72 H1127C AFT ADI PITCH ATTITUDE ERROR ±10 DEG 1 S/S
V72 H1129C AFT ADI YAW ATTITUDE ERROR ±10 DEG 1 S/S

V73X2247E
ADI ATT
DATA VALID FLAG

V72 K2097X AFT ADI ERROR SCALE HI 1=HI 1 S/S
V72 K2098X AFT ADI ERROR SCALE MED 1=MED 1 S/S
V72 K2099X AFT ADI ERROR SCALE LO 1=LO 1 S/S

V72 K2093X AFT ADI RATE SCALE HI 1=HI 1 S/S
V72 K2094X AFT ADI RATE SCALE MED 1=MED 1 S/S
V72 K2095X AFT ADI RATE SCALE LO 1=LO 1 S/S

V72 K2101X AFT ADI ATT SEL INRTL 1=INRTL 1 S/S
V72 K2102X AFT ADI ATT SEL LVLH 1=LVLH 1 S/S
V72 K2103X AFT ADI ATT SEL REF 1=REF 1 S/S

V72 K2092X AFT ADI ATT REF PB-B 1=PRESS 1 S/S
V72 K2091X AFT ADI ATT REF PB-A 1=PRESS 1 S/S

V72 K5175X SENSE SW -Z CON A 1=-Z 1 S/S
V72 K5180X SENSE SW -Z CON B 1=-Z 1 S/S
V72 K5177X SENSE SW -Z CON C 1=-X 1 S/S

V72 K5181X SENSE SW -X CON B 1=-X 1 S/S
V72 K5176X SENSE SW -Z CON B 1=-Z 1 S/S
V72 K5182X SENSE SW -X CON C 1=-X 1 S/S

ADI
ERROR
HIGH
LOW
PNL A6 S6

ADI
RATE
HIGH
LOW
PNL A6 S7

ADI
ATTITUDE
INRTL
LVLH
REF
PNL A6 S5

SENSE
-Z
-X
PNL A6 S1

ATT
REF
PNL A6 S3

1.2K
FF 3
FF 1
FF 2

NOT USED

$V_{CNTLCA2}$
$V_{CNTLCA1}$
$V_{CNTLAB2}$
$V_{CNTLBC2}$

FROM
DDU
O2

BASIC REV E-6

DATE: 03/01/96	NAME: VSH	VERSION: BPTs 11
DATE: 03/13/96	NAME: VSH	VERSION: BPTs 12
DATE: 04/05/96	NAME: BJB	VERSION: INKs 5

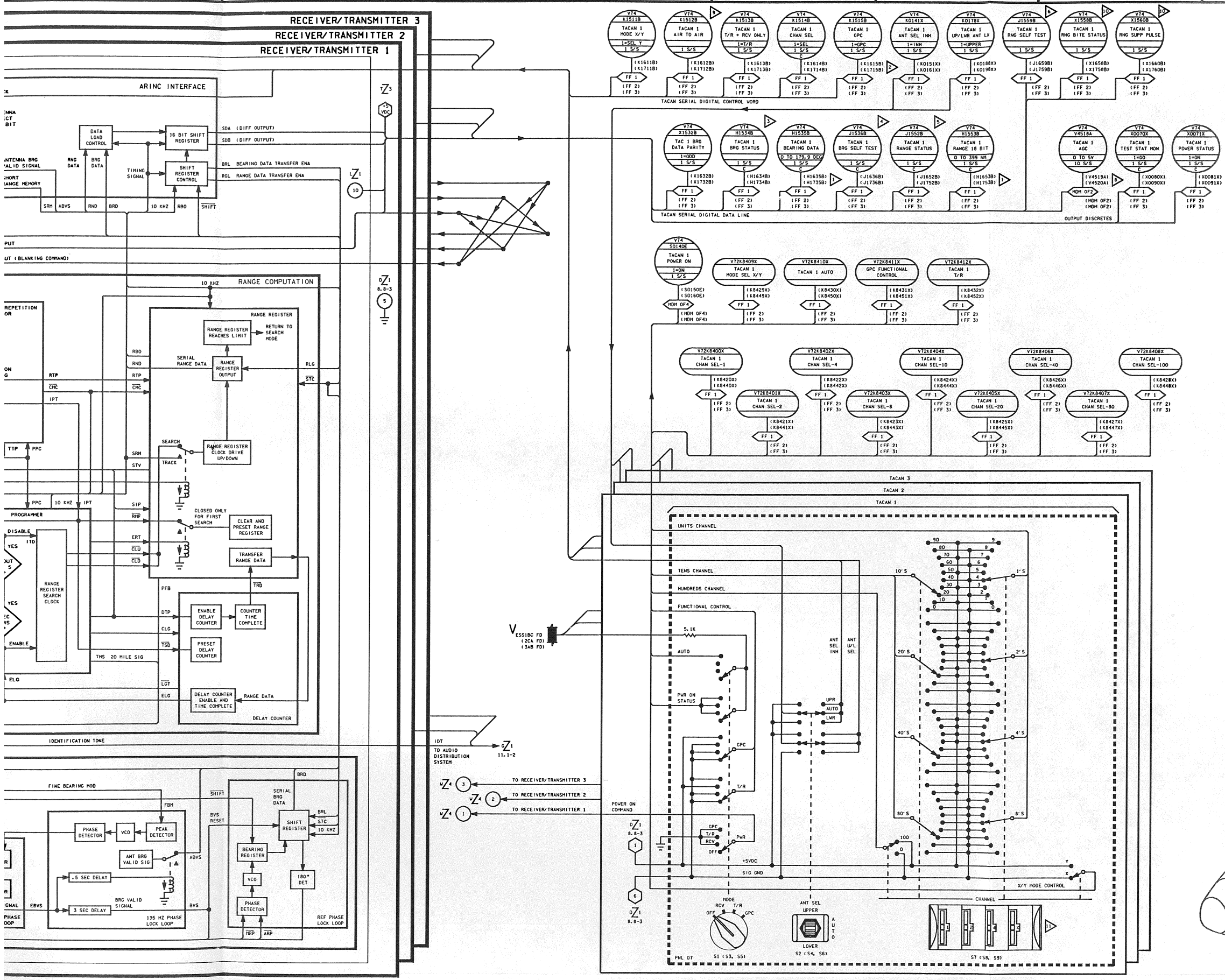

CODE	DEFINITION
	A
ABVS	ANTENNA BEARING VALID SIGNAL
AMS	ACQUISITION MEMORY SIGNAL COMPLEMENT
ARP	AUXILIARY REFERENCE PULSE
ARP	AUXILIARY REFERENCE PULSE COMPLEMENT
ASC	ANTENNA SWITCH COMMAND
ASD	ANTENNA SWITCH DRIVE
ASI	ANTENNA SWITCH INPUT
AST	ANTENNA SWITCH TRIGGER
	B
BRD	BEARING SERIAL DATA
BRL	BEARING LOAD DATA
BVS	BEARING VALID SIGNAL
	C
CBM	COURSE BEARING MODULATION
CCW	CONTINUOUS CW
CCW (DET)	CONTINUOUS CW DETECTED
CLD	CLOCK DOWN COMPLEMENT
CLG	RANGE REGISTER SEARCH CLOCK
CLU	CLOCK UP COMPLEMENT
CMC	CHANNEL MODE CHANGE COMMAND
CMC	CHANNEL MODE CHANGE COMMAND COMPLEMENT
COB	CHANNEL OFFSET BIT
CRV	COMPOSITE RECEIVED VIDEO
	D
DSGC	DECODER SLOW GAIN CONTROL
DSMO	DECODER SAMPLE AND HOLD OUTPUT
DTP	DETECTED TRANSMITTER PULSE
	E
EBVS	EARLY BEARING VALID SIGNAL
ELG	EARLY LATE GATE
ERT	ENABLE RANGE TIME
	F
FBF	FINE BEARING FILTER
FBM	FINE BEARING MODULATION
FGC	FAST GAIN CONTROL
FHZ	15 HZ
FLS	FREQUENCY SYNTHESIZER LOCK STATUS
FPC	FIRST PULSE COMMAND
FSBAD	FREQUENCY SYNTHESIZER BUFFER AMPLIFIER DIVIDER
FSBAD	FREQUENCY SYNTHESIZER BUFFER AMPLIFIER OUTPUT
FSCSP	FREQUENCY SYNTHESIZER CARRIER SWITCHED PULSE
FSCV	FREQUENCY SYNTHESIZER CONTROL VOLTAGE
FSDBE	FREQUENCY SYNTHESIZER DIVIDE BY EIGHT
FSDSX	FREQUENCY SYNTHESIZER DIVIDER SIGNAL X
FSDSY	FREQUENCY SYNTHESIZER DIVIDER SIGNAL Y
FSEV	ERROR VOLTAGE
FSGTV	TRIGGER PULSE
FSPCW (DET)	PULSED CW (DETECTED)
FSS	STATUS
	H
HFC	HIGH FREQUENCY CLOCK
HFC	HIGH FREQUENCY CLOCK COMPLEMENT
HTH	135 HZ
	I
IAS	INTERNAL ANTENNA SWITCH
IBP	INTERNAL BLANKING PULSE
IDO	IDENTIFICATION TONE OSCILLATOR (1350 HZ)
IDT	IDENTIFICATION TONE
IDTI	IDENTIFICATION TONE INPUT
INH	INHIBIT
IPT	INTERROGATION PRETRIGGER
ITD	INITIAL TARGET DETECTOR
	L
LGT	LATE GATE TIME COMPLEMENT
LOS	LOCAL OSCILLATOR SIGNAL
	M
MAR	MAIN AND AUXILIARY RESET
MRP	MAIN REFERENCE PULSE COMPLEMENT
MRS	MAIN RESET SIGNAL
	N
NDS	NOISE LEVEL DETECTOR SIGNAL
	O
OMT	ONE MINUTE TIMER
	P
PCW	PULSED CW
PFB	POWER FEEDBACK
PPC	PRECISION PULSE CLOCK
PPS	PEAK POWER STATUS
PRC	PRF CHANGE COMMAND
PSS	POWER SUPPLY STATUS

CODE	DEFINITION
	R
RBO	RANGE LSB
RECRV	RECEIVER COMPOSITE RECEIVED VIDEO
RECST	RECEIVER SELF TEST
RESGA	RECEIVER GAIN
RESGB	RECEIVER GAIN BUFFERED
RETRG	RECEIVER BLANKING TRIGGER
RGL	RANGE LOAD DATA
RMF	RANGE MAXIMUM COMPLEMENT
RMD	RANGE SERIAL DATA
RRC	RANGE RELAY COMMAND
RRS	RANGE RELAY SIGNAL
RSL	RECEIVED SIGNAL LINE
RTI	RANGE TRIGGER INHIBIT
RTI	RANGE TRIGGER INHIBIT COMPLEMENT
RTP	RANGE TRIGGER PULSE
RVM	RECEIVED VIDEO DIGITIZED
RVM	RECEIVED VIDEO DIGITIZED COMPLEMENT
RVS	RANGE VALID SIGNAL
	S
SAP	SAMPLE PULSE
SCDV	SYNTHESIZER CONTROL DIVIDER VOLTAGE
SDA	SERIAL DATA A
SDB	SERIAL DATA B
SFH	640 HZ
SGC	SLOW GAIN CONTROL
SHIFT	SHIFT COMPLEMENT
SIP	SCALED INCIDENT POWER
SIS	SAMPLE PULSE DELAY
SPC	SECOND PULSE COMMAND
SPI	SUPPRESSION PULSE INPUT
SPO	SUPPRESSION PULSE OUTPUT
SPP	SECOND PULSE OF PAIR
SPS	SINGLE PULSE SAMPLE
SRM	SHORT RANGE MEMORY
SRPV	SYNTHESIZER REFERENCE PULSE VOLTAGE
SRV	SCALED RECEIVED VIDEO
STC	SELF TEST COMMAND
STC	SELF TEST COMMAND COMPLEMENT
STM	SELF TEST MODULATION
STT	SELF TEST TRIGGER
STV	SELF TEST VALID
	T
TIS	TRANSMIT INHIBIT SIGNAL
TMS	TWENTY MILE SQUARE WAVE (4046 HZ)
TOC	TURN-ON COMMAND
T/R	TRANSMIT/RECEIVE MODE
TRC	TRANSMIT RECEIVE COMMAND
TRD	TRANSFER RANGE DATA COMPLEMENT
TSD	TRANSFER SYSTEM DELAY COMPLEMENT
TSH	270 HZ
TSL	TRANSMIT SIGNAL LINE
TTP	TRANSMITTER TRIGGER PULSE
	V
VCO	VOLTAGE CONTROLLED OSCILLATOR
	X
XAB	X MODE AUXILIARY BURST
XPP	X MODE PULSE PAIR
XYT	X/Y MODE/TEST COMMAND
	Y
YAB	Y MODE AUXILIARY BURST
YMC	Y MODE COMMAND
YMC	Y MODE COMMAND COMPLEMENT
YPP	Y MODE PULSE PAIR

(1) PUSHBUTTONS WILL REPLACE THUMBWHEELS AS FAILURES OCCUR

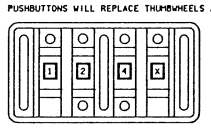

(2) NOT AVAILABLE FOR GOULD TACAN. (SEE SHEET 2 FOR DETAILS)

(3) NOT USED IN SHUTTLE APPLICATION

(4) SHADOWBOXED TM HAS RATES OF 1 S/S

(5) HARDWARE SELF-TEST FAIL LIMITS=+0.0 -0.2 NM RNG, 180 ±2.0 DEG BRG
SOFTWARE SELF-TEST FAIL LIMITS=+0.0 -0.5 NM RNG, 180 ±2.5 DEG BRG

(6) WD2, BITS 5 AND 6 OF V74M1549Px
11=IN RNG SELF TEST

(7) WD1, BITS 0 AND 1 OF V74M1549Px
00=VALID RNG DATA

(8) BITS 5 AND 6 OF V74M1531Px
11=IN BRG SELF TEST

(9) BITS 1 AND 2 OF V74M1530Px
00=VALID BRG DATA (<180°)
11=VALID BRG DATA (>180°)

(10) THIS SIGNAL DENOTES SELF-TEST COMMAND

NOTES: (4) SHADOWBOXED TM HAS RATES OF 12.5 S/S

TRANSCEIVER TO ANTENNA ASSIGNMENTS

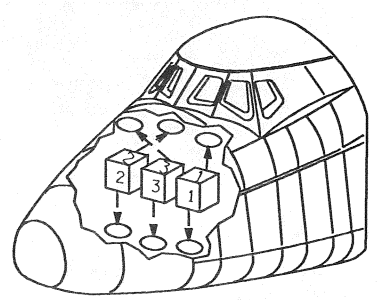

2 TAC

SIGNATURE	DATE	NATIONAL AERONAUTICS AND SPACE ADMINISTRATION LYNDON B. JOHNSON SPACE CENTER HOUSTON, TEXAS
DSGN L. DUMIS	10/23/78	
DR		
ENGR E. LIEBMAN		TACAN (GOULD)
ENGR	9/4/81	
APP	9/15/81	
MGR	9/15/81	
CADD	7-15-82	SPACE SHUTTLE / ALL
LTR E	PCN 6	126.5 X 34

DWG NO 9.2 — PAGE — SHEET 1 OF 2

BASIC REV E-6

RECEIVER
FRONT END
TUNABLE FILTER
MIXER
FIRST IF AMPLIFIER AND MIXER
SECOND IF AMPLIFIER AND VIDEO DETECTOR
SELF TEST
RECEIVED RF PULSES
(LOS)
(LOCAL OSC SIGNAL)
(63 MHZ OFFSET)
(BLANK DURING SELF TEST)
FIRST IF SIGNAL (63 MHZ)
SECOND IF SIG (11.5 MHZ)
RECEIVER GAIN BUFFERED SIGNAL
BLANKING TRIGGER
RECEIVER GAIN SIGNAL
RETRG
RESGA
RESGB
RECVR
CHANNEL SELECT BITS
CHANNEL OFFSET BIT
ACTIVATES SELF TEST
SELF TEST COMMAND
SELF TEST GATING
180° BRG SIG SIM
SELF TEST SIM DATA
FAST GAIN CONTROL
SLOW GAIN CONTROL
INTERNAL BLANKING PULSE
COMPOSITE RECEIVED VIDEO

DUPLEXER/FILTER
CIRCULATOR
TRANSMIT SIGNAL LINE (HIGH POWER RF PULSE)

FREQUENCY SYNTHESIZER
DETECTOR AND SELF TEST
CHANNEL SELECT DATA
CONTROL DIVIDER
(CLOCK SIGNAL TO DECODE CHANNEL SELECT DATA)
CARRIER SWITCH PULSE
(CONTROL VOLTAGE)
OSCILLATOR CONVERTER
X 3 FREQ MULT
VCO/BUFFER AMPLIFIER
VOLTAGE REGULATOR
DIVIDE BY EIGHT
(FREQ SYN DIVIDE BY EIGHT SIG)
CONTINUOUS WAVE SIGNAL
PULSED RF SIGNAL
GATE TRIGGER PULSES
TRANSMIT-RECEIVE COMMAND
FREQ LOCK STATUS
FREQ SYNTH STATUS
TRANSMITTER TRIGGER PULSES
1MHZ PRECISION PULSE CLOCK SIGNAL

POWER AMPLIFIER/MODULATOR
CASCADED POWER AMPLIFIER STAGES
OUTPUT ASSY
FILAMENT REGULATOR ASSEMBLY
PULSE MODULATION TRANSFORMER
SWITCH DRIVER
ONE MIN TIMER CKT
(ALLOW FOR TUBE WARMUP)
FIRST PULSE COMMAND
SECOND PULSE COMMAND
+140VDC

DATA PROCESSOR

INTERNAL CONTROL
X/Y MODE/TEST DATA
OPERATIONAL MODE DATA
CHANNEL SELECT DATA
(T/R OR AUTO)
(TEST MODE)
CHANGE MODE CHANNEL COMMAND
Y MODE CMD
T/R CMD
TRANSMIT INHIBIT SIGNAL
ANTENNA SWITCH SIGNAL

ARINC INTERFACE
UPPER ANTENNA LOCK SIGNAL
LOWER ANTENNA LOCK SIGNAL
INTERNAL ANTENNA SW SIGNAL
UPPER ANTENNA LOCK
ANTENNA SELECT INHIBIT
ANTENNA BRG VALID SIGNAL
SHORT RANGE MEMORY
DATA LOAD CONTROL
16 BIT SHIFT REGISTER
SHIFT REGISTER CONTROL
RNG DATA
BRG DATA
TIMING SIGNAL
STC – ACTIVATES SELF TEST

SELF TEST
SIMULATED RANGE AND BEARING DATA
TEST VALUES: RANGE = 0 NM, BEARING = 180°
RANGE DATA
BEARING DATA
R/T STATUS
LOGIC "0" = BITE FAILURE
RTS GOES TO ZERO FOR DURATION OF BITE TEST (4-18 SECONDS)

SUPPRESSION PULSE OUTPUT
SUPPRESSION PULSE INPUT (BLANKING COMMAND)
(PRF) PULSE REPETITION RATE GENERATOR
NOISE GEN (JITTER)
TD 60 µS
COMMENCE INTERROGATION PULSE FIRING
147/27 OSC
SEARCH AT 147 PPS TRACK AT 27 PPS
PULSE GATING

RANGE
10 KHZ
RANGE REGISTER REACHES LIMIT
SERIAL RANGE DATA
RANGE REGISTER OUTPUT
RANGE REGISTER CLOCK DRIVE UP/DOWN
SEARCH
TRACK
CLOSED ONLY FOR FIRST SEARCH
CLEAR AN PRESET RA REGISTE
TRANSFE RANGE DA
ENABLE DELAY COUNTER
COUNTER TIME COMPLETE
PRESET DELAY COUNTER
DELAY COUNTER ENABLE AND TIME COMPLETE
THS 20 MILE SIG

DECODER
CLOCK GENERATOR AND FILTER
10 MHZ GENERATOR
FREQUENCY DIVIDER
DELAY CIRCUIT
BLANKING SWITCH
ONE SHOT
ANALOG SWITCH
SIGNAL COND/SAMPLE AND HOLD
PEAK DET
LOW PASS FILTER
SCALING CIRCUIT
135 HZ BP FILTER
SAMPLE AND HOLD NETWORK
THRESHOLD AND CRV NOISE DET
PEAK POWER STATUS
RANGE RELAY SIGNAL
POWER FEEDBACK SIGNAL
NOISE LEVEL DETECTION SIGNAL

TIME BASE GENERATOR
RANGE RELAY DECODER
RESET LOGIC
PULSE PAIR DECODER
DECODING GATES
MAIN RESET
AGC AND REF PULSE GENERATOR
MAIN/AUX REF PULSE DETECTOR
HRP/ARP VALID
SLOW AGC FILTER
COARSE BRG AMPL
15 HZ BP FILTER
135 HZ BP FILTER
FGC AMPL
COARSE BRG MOD

CHANGE PRF FROM 147 TO 27
SET SHORT RANGE MEMORY
SET TRACK MEMORY
SET ACQUISITION MEMORY SCHEDULE
CHANGE FROM SEARCH TO TRACK MODE
TRACK MEMORY AND VELOCITY GENERATOR
PROGRAMMER
DISABLE
3 OUT OF 5 ?
CONTINUE IN SEARCH MODE
REC RRS ?
RANGE REGISTER SEARCH CLOCK
ENABLE

IDENTIFICATION TONE

BEARING COMPUTATION
FINE BEARING MOD
PHASE DETECTOR
VCO
SHIFT REGISTER
ANT BRG VALID SIG
.5 SEC DELAY
3 SEC DELAY
BRG VALID SIGNAL
EARLY BRG VALID SIGNAL
15 HZ PHASE LOCK LOOP
135 HZ PHASE LOCK LOOP
BRG REGISTE

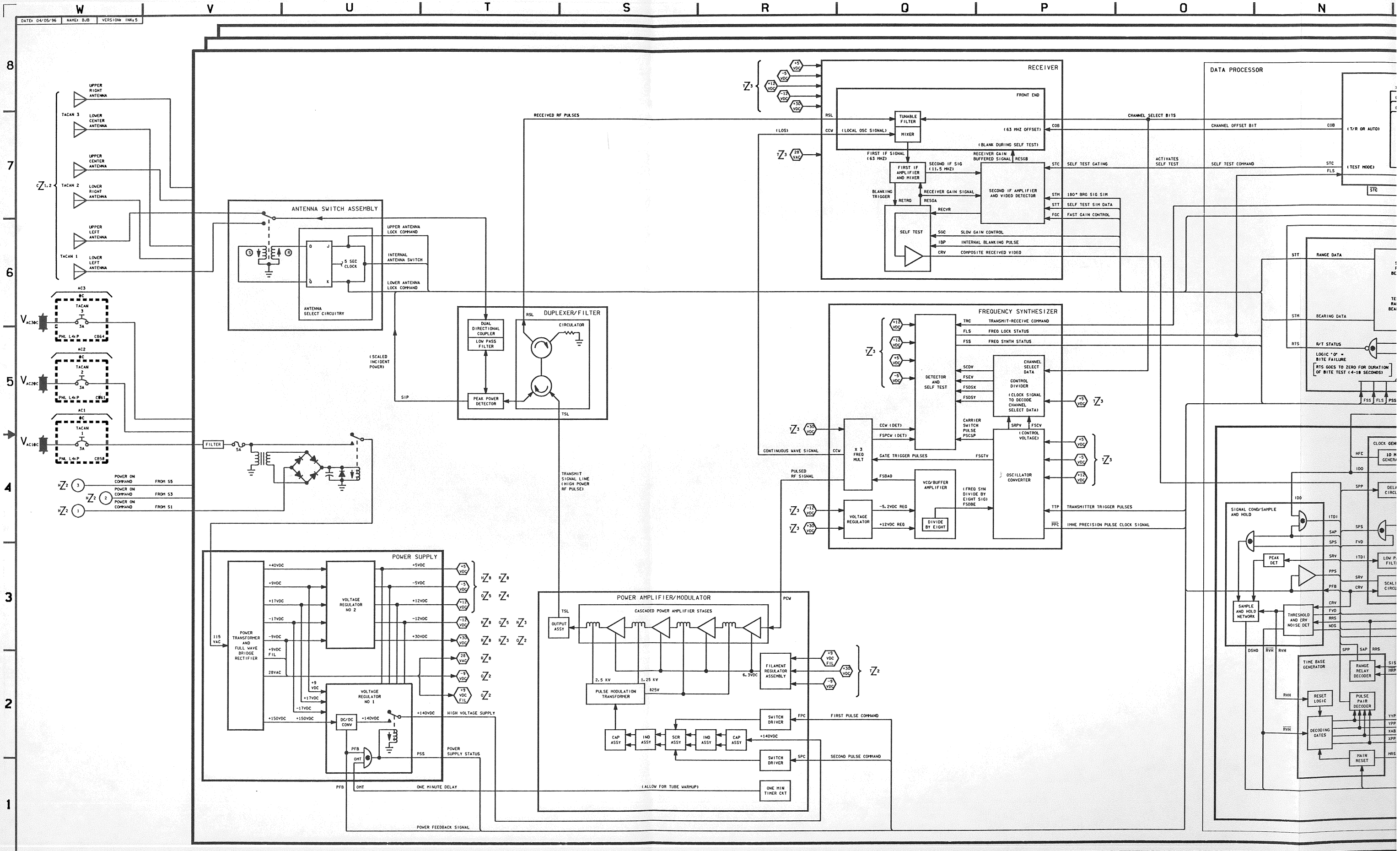

DATE: 04/05/96
NAME: BJB
VERSION: INK 5
W
V
U
T
S
R
Q
P
O
N
8
7
6
5
4
3
2
1
TACAN 3
TACAN 2
TACAN 1
UPPER RIGHT ANTENNA
LOWER CENTER ANTENNA
UPPER CENTER ANTENNA
LOWER RIGHT ANTENNA
UPPER LEFT ANTENNA
LOWER LEFT ANTENNA
ANTENNA SWITCH ASSEMBLY
ANTENNA SELECT CIRCUITRY
5 SEC CLOCK
UPPER ANTENNA LOCK COMMAND
INTERNAL ANTENNA SWITCH
LOWER ANTENNA LOCK COMMAND
RECEIVED RF PULSES
DUPLEXER/FILTER
DUAL DIRECTIONAL COUPLER
LOW PASS FILTER
PEAK POWER DETECTOR
CIRCULATOR
(SCALED INCIDENT POWER)
TRANSMIT SIGNAL LINE (HIGH POWER RF PULSE)
FILTER
POWER ON COMMAND
FROM S5
FROM S3
FROM S1
RECEIVER
FRONT END
TUNABLE FILTER
MIXER
(LOCAL OSC SIGNAL)
(63 MHZ OFFSET)
(BLANK DURING SELF TEST)
FIRST IF SIGNAL (63 MHZ)
FIRST IF AMPLIFIER AND MIXER
SECOND IF SIG (11.5 MHZ)
RECEIVER GAIN BUFFERED SIGNAL
SECOND IF AMPLIFIER AND VIDEO DETECTOR
BLANKING TRIGGER
RECEIVER GAIN SIGNAL
SELF TEST
SLOW GAIN CONTROL
INTERNAL BLANKING PULSE
COMPOSITE RECEIVED VIDEO
SELF TEST GATING
180° BRG SIG SIM
SELF TEST SIM DATA
FAST GAIN CONTROL
CHANNEL SELECT BITS
ACTIVATES SELF TEST
DATA PROCESSOR
CHANNEL OFFSET BIT
SELF TEST COMMAND
(T/R OR AUTO)
(TEST MODE)
RANGE DATA
BEARING DATA
R/T STATUS
LOGIC "0" = BITE FAILURE
RTS GOES TO ZERO FOR DURATION OF BITE TEST (4-18 SECONDS)
FREQUENCY SYNTHESIZER
TRANSMIT-RECEIVE COMMAND
FREQ LOCK STATUS
FREQ SYNTH STATUS
DETECTOR AND SELF TEST
CHANNEL SELECT DATA
CONTROL DIVIDER
(CLOCK SIGNAL TO DECODE CHANNEL SELECT DATA)
CARRIER SWITCH PULSE
(CONTROL VOLTAGE)
OSCILLATOR CONVERTER
CONTINUOUS WAVE SIGNAL
X 3 FREQ MULT
GATE TRIGGER PULSES
PULSED RF SIGNAL
VCO/BUFFER AMPLIFIER
DIVIDE BY EIGHT
VOLTAGE REGULATOR
TRANSMITTER TRIGGER PULSES
IMHE PRECISION PULSE CLOCK SIGNAL
SIGNAL COND/SAMPLE AND HOLD
PEAK DET
SAMPLE AND HOLD NETWORK
THRESHOLD AND CRV NOISE DET
TIME BASE GENERATOR
RESET LOGIC
DECODING GATES
RANGE RELAY DECODER
PULSE PAIR DECODER
MAIN RESET
POWER SUPPLY
POWER TRANSFORMER AND FULL WAVE BRIDGE RECTIFIER
VOLTAGE REGULATOR NO 2
VOLTAGE REGULATOR NO 1
DC/DC CONV
HIGH VOLTAGE SUPPLY
POWER SUPPLY STATUS
ONE MINUTE DELAY
POWER FEEDBACK SIGNAL
POWER AMPLIFIER/MODULATOR
CASCADED POWER AMPLIFIER STAGES
OUTPUT ASSY
PULSE MODULATION TRANSFORMER
FILAMENT REGULATOR ASSEMBLY
SWITCH DRIVER
FIRST PULSE COMMAND
SECOND PULSE COMMAND
CAP ASSY
IND ASSY
SCR ASSY
ONE MIN TIMER CKT
(ALLOW FOR TUBE WARMUP)

BASIC REV E-6

DATE: 03/01/96	NAME: VSH	VERSION: BPT: 4
DATE: 03/13/96	NAME: VSH	VERSION: BPT: 5
DATE: 04/08/96	NAME: BJB	VERSION: INK: 2

TRANSCEIVER TO ANTENNA ASSIGNMENTS

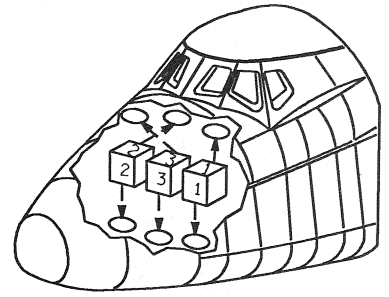

D NOT USED IN SHUTTLE APPLICATION

D ACTUAL BLANKING PULSE CIRCUIT

TACAN 1
NO CONNECTION
PRE-PROCESSOR
SUPPRESSOR

TACAN 2
NO CONNECTION
PRE-PROCESSOR
SUPPRESSOR

TACAN 3
NO CONNECTION
PRE-PROCESSOR
SUPPRESSOR

7. HARDWARE SELF TEST FAIL LIMITS = 0.0 +0.2 -0.0 NM RNG
180 ±2.0 DEG BRG

SOFTWARE SELF-TEST FAIL LIMITS = 0.0 +0.5 -0.0 NM RNG
180 ±2.5 DEG BRG

D WD2, BITS 5 AND 6 OF V74M1549P=
11 = IN RNG SELF TEST

D WD1, BITS 0 AND 1 OF V74M1549P=
00 = VALID RNG DATA

D BITS 5 AND 6 OF V74M1531P=
11 = IN BRG SELF TEST

D BITS 1 AND 2 OF V74M1530P=
00 = VALID BEARING DATA (<180 DEG)
11 = VALID BEARING DATA (>180 DEG)

2 SHADOWBOXED TM HAS RATES OF 1 S/S

NOTES: 1 SHADOWBOXED TM HAS RATES OF 12.5 S/S

D2 PUSHBUTTONS WILL REPLACE THUMBWHEELS AS FAILURES OCCUR

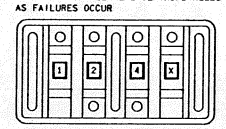

D1 WD 2, BIT 7 OF V74M1549P=
0 = SUPPRESSION PULSES "NOT" DETECTED
(FAILURE CONDITION WHEN OTHER TACAN'S ARE TRANSMITTING)

D2 WD 2, BIT 4 OF V74M1549P=
1 = BITE FAILURE

2 TAC 2

SIGNATURE	DATE	NATIONAL AERONAUTICS AND SPACE ADMINISTRATION LYNDON B. JOHNSON SPACE CENTER HOUSTON, TEXAS	
DSGN M. GILLESPIE	8/20/93		
DR		TACAN (COLLINS)	
ENGR E. LIEBMAN			
ENGR	4/5/96		
APP	4/5/96		
APP	4/5/96	SPACE SHUTTLE	DWG NO 9.2
CADD S. K. [illegible]	4/5/96	ALL	
LTR E	PCN 6	104.5 X 34	PAGE SHEET 2 OF 2

BASIC REV E-6

TACAN 3
TACAN 2
TACAN 1

UPPER RIGHT ANTENNA
TACAN 3 — LOWER CENTER ANTENNA
UPPER CENTER ANTENNA
TACAN 2 — LOWER RIGHT ANTENNA
UPPER LEFT ANTENNA
TACAN 1 — LOWER LEFT ANTENNA

EQUIVALENT BLANKING PULSE CIRCUIT

RECEIVER VIDEO
SUPPRESSION OUT
SUPPRESSION IN
MODULAR TRIGGER

PRE-PROCESSOR BLOCK DIAGRAM
SUPPRESSOR
PEAK DETECTOR
A/D LATCH
PULSE VALIDATION
TIME LATCH
SEQUENCER
TAG LATCH
CONTROL LATCH
2-PORT MEMORY 2K
INTERNAL AGE I/O
SERIAL I/O
DAC
INTERNAL AGC
RECEIVER TUNE
PROCESSOR INTERFACE
INTERNAL SERIAL CONTROL
SERIAL DATA OUT

CPU BLOCK DIAGRAM
PROCESSOR INTERFACE
IDENT TONE GENERATOR
IDENT OK
STATION ID TONE
ROM 32K
SYNTHESIZER INTERFACE
SYNTH TUNING
EEPROM 0.25K
OUTPUT LATCH
ANT SELECT/ CONTROL
SERIAL DATA
RT STAT FLAGS
RAM 2K
2-PORT MEMORY 2K
CPU 28002
OUTPUT LATCH
PROGRAM PINS
ANT SEL CONTROL
U/L ANT SEL
INPUT LATCH

RF SECTION BLOCK DIAGRAM
DETECTED/RECEIVER VIDEO
SUPPRESSION
INTERNAL AGC
RECEIVER TUNE
RECEIVER TUNE
63 MHz IF
RCVR DISRUPTOR
IF AMPLIFIER
SYNTHESIZER
RECEIVER FRONT-END
VCO TUNING V
256 TO 288 VCO FREQ
LO
962 TO 1213 MHz RCVR RF FROM ANTENNA
TR CONTROL
VCO/ BUFFER
TR SWITCH
RF TO ANTENNA SWITCH
MODULAR TRIGGER
PREDRIVER
DRIVER
FINAL
MODULATOR
POWER AMPLIFIER
+70V
ANT SELECT/ CONTROL
POWER MONITOR (SELF TEST)
LOWER LEFT ANTENNA
UPPER LEFT ANTENNA

MDM INTERFACE
MDM BIT ENABLE
SERIAL DATA OUT (CPU)
SERIAL DATA OUT (PRE-PROCESSOR)
SERIAL DATA INTERFACE CIRCUIT
SERIAL DATA (RANGE/BEARING)
RT STAT FLAGS
POWER ON STATUS INTERFACE CIRCUIT
POWER ON STATUS
MODIFIED AGC DATA
DIGITAL/ANALOG CONVERTER
AGC SCALING AND INTERFACE CIRCUIT
AGC SIGNAL
MDM TEST SIGNAL
TEST STAT MON INTERFACE CIRCUIT
TEST STATUS MONITOR
UPPER/LOWER ANTENNA SELECT
UP/LWR ANT SEL INTERFACE CIRCUIT
UPPER/LOWER ANTENNA SELECT
ANTENNA SELECT CONTROL
ANTENNA SW SELECT INTERFACE CIRCUIT
ANTENNA SWITCH INHIBIT
ANTENNA CONTROL (GPC/SWITCH → TACAN)
SERIAL DATA IN
SHIFT REGISTER
SERIAL DATA INTERFACE CIRCUIT
SERIAL DATA IN

V_{PNC} 016 — TACAN 3 — 5A — +28V — PNL 016 — CB32
V_{PNB} 015 — TACAN 2 — 5A — +28V — PNL 015 — CB42
V_{PNA} 014 — TACAN 1 — 5A — +28V — PNL 014 — CB40

POWER SUPPLY
FILTER
FILTER
TRANSFORMER
PULSE WIDTH MODULATOR
ERROR AMP
RECTIFIER/ FILTER
+5VDC
COMPARATOR
5V MON
+70V
+15V
-15V
+22V
-22V
-19V
+31V
-5V
+5V

POWER ON COMMAND, SIGNAL
POWER ON COMMAND, GROUND

S R O P O N

DATE: 04/08/96 NAME: BJB VERSION: INK 2

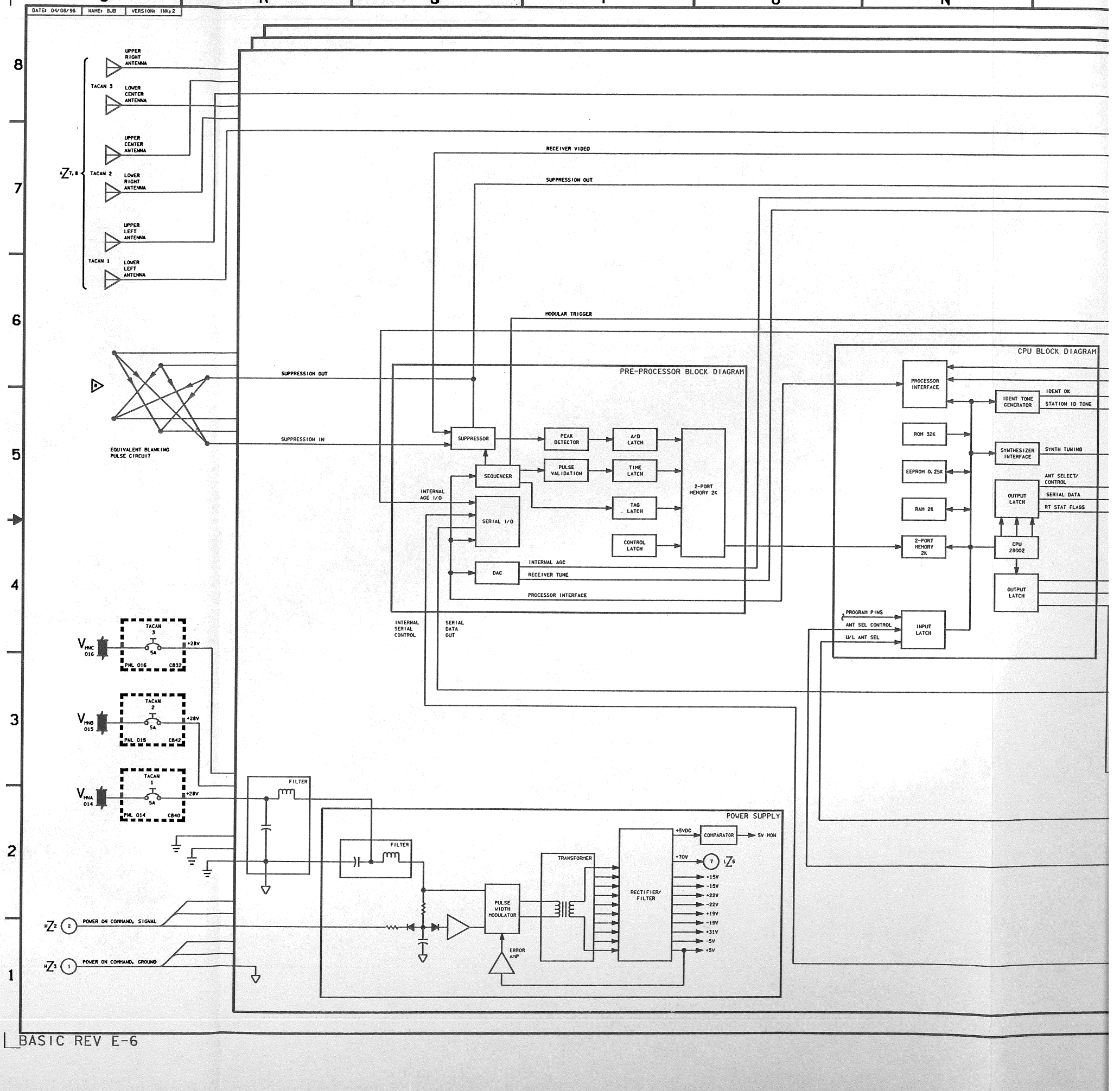

BASIC REV E-6

DATE: 11/9/87	NAME: MAG	VERSION: INK 5
DATE: 08/20/90	NAME: MAG	VERSION: INK 6
DATE: 08/29/90	NAME: VSH	VERSION: INK 7

RADAR ALTIMETER 2

RADAR ALTIMETER 1

RANGE COMPUTER

DIGITAL CONVERTER

ANALOG TRACKER

T_D (DIGITAL START PULSE)

DIGITAL STOP PULSE

START STOP M.V.

CLEAR

RESETS ON STOP PULSE

1 PULSE TO ACCUMULATOR FOR EVERY 5 CLOCK PULSES

÷5 COUNTER

EACH PULSE = 1 FOOT WHEN AVERAGED FOR 100 PERIODS

ACCUMULATOR

1 FT | 2 FT | 4 FT | 8 FT | 16 FT | 32 FT | 64 FT | 128 FT | 256 FT | 512 FT | 1024 FT | 2048 FT | 4096 FT

$T_{STOP} - T_D$ PROPORTIONAL TO ALTITUDE

CLOCK (24.5892 MHZ)

ROUNDOFF (ADD 1' IF > 3/5')

PARITY GEN

VALIDITY BIT SET

VALIDITY BIT=1

VALIDITY FLIP-FLOP

ADVANCE 1 COUNT EACH TIME THE START-STOP M.V. RESETS FROM 1 TO 0

AVERAGING ÷100 COUNTER

OUTPUT = 0 IF COUNT = 100

INITIATES ROUNDOFF CYCLE, LOAD PULSE, AND RESET CYCLE

SHIFT REGISTER LOAD PULSE

SHIFT REGISTER AND CONTROL LOGIC

SHIFT CLOCK

CLOCK RECIEVER

SERIAL DIGITAL DATA

READ CMD

LOAD RESET GEN

3. RESET CMD

1. ROUNDOFF

2. LOAD CMD

ZEROES ALTITUDE SERIAL DIGITAL WORD IN NO TRACK STATE

LOCKON

READ COMMAND

READ RECIEVER

FF1 (FF2)

RA 1 TEST V74X0174X (X0184X)

SHIFT CLOCK

V74 X1803B RA 1 PARITY 1=ODD 1 S/S (X1853B)

V74 H1804B RA 1 ALTITUDE 0-5000' 1 S/S C (H1854B)

V74 X1805B RA 1 VALIDITY 0=FAIL 1 S/S C (X1855B)

V74 X1806B RA 1 CONTROL 0=FAIL 1 S/S (X1856B)

V74 X0172X RA 1 LOCK ON 1=LOCK ON 1 S/S (X0182X)

V74 X0176X RA 1 READY 1=READY 1 S/S (X0186X)

+15.5 VDC

E_R

E_R (ANALOG INTERNAL RANGE VOLTAGE) (0-28VDC)

RATE MAGNITUDE DETECTOR

TRACK ERROR CURRENT

RATE DIRECTION DETECTION

RATE MEMORY

VOLTAGE PROPORTIONAL TO RANGE

RANGE INTEGRATOR

E_R (SEARCH GEN RETRACE (MD)

RANGE MEMORY

ANALOG ALTITUDE

TRACK=0-5VDC NO TRACK=0.1± 0.1 VDC SELF TEST=1.0VDC

FIXED OFF-SET REFERENCE CURRENT

FIXED REFERENCE VOLTAGE

NO TRACK

INHIBIT LOCK-ON IN RETRACE

SEARCH SIGNAL

SEARCH GEN INHIBIT (REMOVED .2 SEC AFTER LOSS OF TRACK)

SEARCH GENERATOR

NO TRACK (DELAYED .2 SEC)

KAGC AMP

KAGC PEAK DETECTOR

TRACK/ NO TRACK DETECTOR

TRACK/ NO TRACK LOGIC

TD 0.2 SEC (TRACK LOOP HOLD)

LOGIC MEMORY DRIVE TRACK=5V, NO TRACK=-0.5V

MEMORY DRIVE LEVEL SHIFTER

TD .1 SEC

E_R (SRC AND PULSE WIDTH WITCH INTERNAL RANGE VOLTAGE)

NO TRACK (DELAYED .3 SEC, DRIVES ANALOG OUTPUT AMP TO NO TRACK LEVEL)

RELIABILITY SIGNAL TRACK=4V, NO TRACK=-0.78V

RELIABILITY VEL SHIFTER

NOISE AGC PEAK DETECTOR

AGC AMP

AGC

ANALOG ALTITUDE IS USED FOR GROUND TESTING

NZ3 SEARCH AND AQUISITION WAVEFORMS AND TIMING

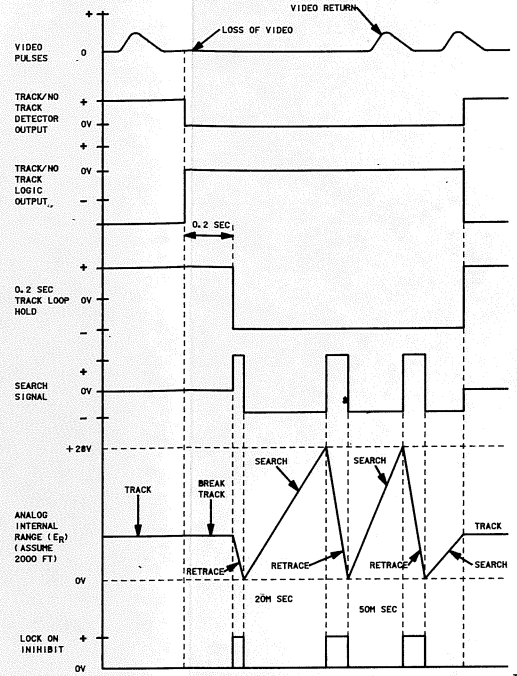

NZ4 ANALOG TRACKER WAVEFORMS AND TIMING

NOTE: ASSUME THAT ALTITUDE IS STEADILY INCREASING

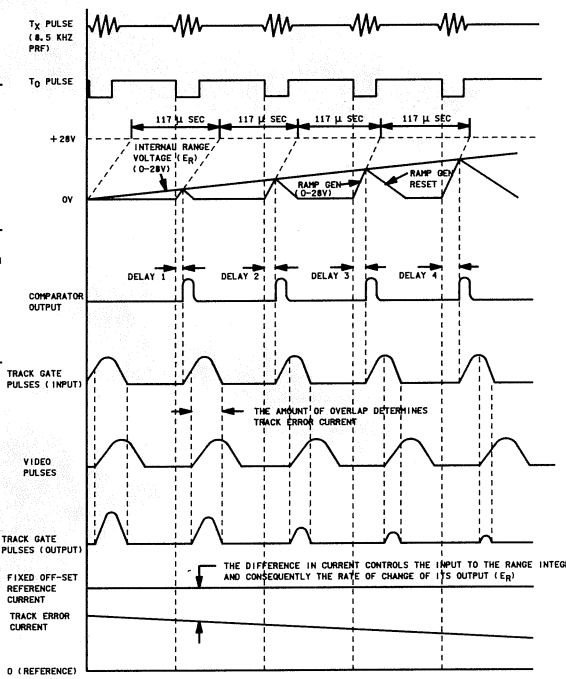

NZ6 DIGITAL TIMING RELATIONSHIPS

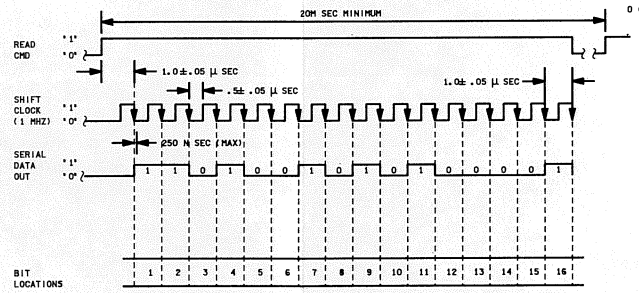

PARENT WORD FORMAT (RDR ALT NO 1-V74 H1801P/RDR ALT NO 2-V74 H1851P)

MEASUREMENT NO	BIT	DESIGNATION	LOGICAL VALUE (TRUE)
V74X1806B/X1854B	1	CONTROL	1(ALWAYS)
V74X1805B/X1854B	2	VALIDITY	1=VALID
V74H1804B/H1854B	3	DATA LSB	1=1 FOOT
	4	DATA	1=2 FEET
	5	DATA	1=4 FEET
	6	DATA	1=8 FEET
	7	DATA	1=16 FEET
	8	DATA	1=32 FEET
	9	DATA	1=64 FEET
	10	DATA	1=128 FEET
	11	DATA	1=256 FEET
	12	DATA	1=512 FEET
	13	DATA	1=1024 FEET
	14	DATA	1=2048 FEET
	15	DATA MSB	1=4096 FEET
V74X1803B/X1853B	16	PARITY ODD	1=ODD PARITY

NZ8 SENSITIVITY RANGE CONTROL (SRC) CONTROLS THE IF AMP GAIN AS A FUNCTION OF ALTITUDE. IT PREVENTS IF AMP SATURATION AT VERY LOW ALTITUDES VIA THE FOLLOWING CONTROL LEVELS:
0-28 FT: SRC HAS MAX CONTROL IN REDUCING IF AMP GAIN
28-140 FT: SRC CONTROL DECREASES LINEARLY
> 140 FT: SRC NO LONGER CONTROLS IF AMP GAIN

OZ8 DIODE SWITCH GATES PORTION OF LOCAL OSCILLATOR SIGNAL TO RF INPUT LINE TO DEVELOP A SIMULATED SELF TEST INPUT SIGNAL WHICH IS THEN PROCESSED AS AN RF RETURN SIGNAL

NZ5 SELF TEST TURNS ON TRANSISTOR WHICH PROVIDES A RADIATION INHIBIT FUNCTION BY DRAWING SUFFICIENT BIAS CURRENT TO CHANGE THE PLATE PULSE WIDTH TO NEARLY ZERO

OZ5 NOTES: T_D IS A TIME REFERENCE PULSE OBTAINED BY INSERTING A VOLTAGE-CURRENT PICK-OFF INTO THE TRANSMITTER CAVITY OSCILLATOR. IT IS USED TO START THE TIMING SEQUENCE IN THE RANGE COMPUTER CIRCUITS

3 RDR ALT

SIGNATURE		DATE	NATIONAL AERONAUTICS AND SPACE ADMINISTRATION LYNDON B. JOHNSON SPACE CENTER HOUSTON, TEXAS	
DSGN		5-2-79		
DR	J D HOLMES			
ENGR	M.T. SEVERANCE	8/17/90	RADAR ALTIMETER	
ENGR		7-30-90		
APP		8/6/90		
APP		9/4/90	SPACE SHUTTLE	DWG NO 9.3
CHK	PLAN	9-11-90	ALL	
LTR	E	PCN	93.5 X 34	PAGE SHEET 1 OF 1

BASIC REV E

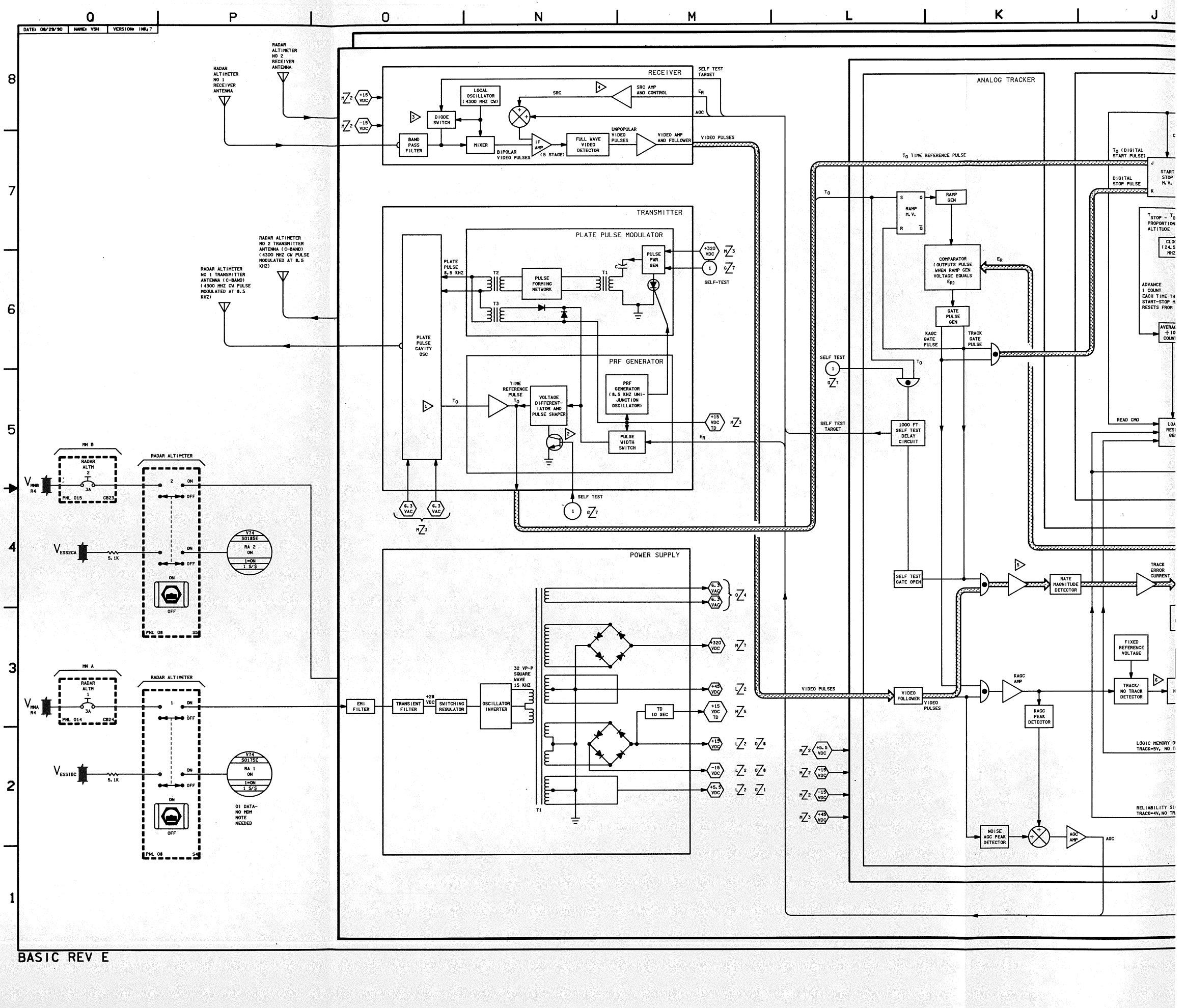
DATE: 08/29/90
NAME: VSH
VERSION: INK 7
RADAR ALTIMETER NO 1 RECEIVER ANTENNA
RADAR ALTIMETER NO 2 RECEIVER ANTENNA
RECEIVER
SELF TEST TARGET
LOCAL OSCILLATOR (4300 MHZ CW)
SRC
SRC AMP AND CONTROL
DIODE SWITCH
AGC
BAND PASS FILTER
MIXER
IF AMP (5 STAGE)
FULL WAVE VIDEO DETECTOR
UNIPOLAR VIDEO PULSES
VIDEO AMP AND FOLLOWER
VIDEO PULSES
BIPOLAR VIDEO PULSES
RADAR ALTIMETER NO 2 TRANSMITTER ANTENNA (C-BAND) (4300 MHZ CW PULSE MODULATED AT 8.5 KHZ)
RADAR ALTIMETER NO 1 TRANSMITTER ANTENNA (C-BAND) (4300 MHZ CW PULSE MODULATED AT 8.5 KHZ)
TRANSMITTER
PLATE PULSE MODULATOR
PLATE PULSE 8.5 KHZ
PULSE FORMING NETWORK
PULSE PWR GEN
SELF-TEST
PLATE PULSE CAVITY OSC
PRF GENERATOR
TIME REFERENCE PULSE
VOLTAGE DIFFERENTIATOR AND PULSE SHAPER
PRF GENERATOR (8.5 KHZ UNIJUNCTION OSCILLATOR)
PULSE WIDTH SWITCH
MN B
RADAR ALTM
PML 015
CB23
RADAR ALTIMETER
ON
OFF
VT4 S0185E
RA 2 ON
1=ON 1 S/S
PML 08
MN A
PML 014
CB2
VT4 S0175E
RA 1 ON
01 DATA-NO MDM NOTE NEEDED
POWER SUPPLY
EMI FILTER
TRANSIENT FILTER
SWITCHING REGULATOR
OSCILLATOR INVERTER
32 VP-P SQUARE WAVE 15 KHZ
TD 10 SEC
ANALOG TRACKER
T0 TIME REFERENCE PULSE
T0 (DIGITAL START PULSE)
DIGITAL STOP PULSE
RAMP M.V.
RAMP GEN
COMPARATOR (OUTPUTS PULSE WHEN RAMP GEN VOLTAGE EQUALS ER)
GATE PULSE GEN
KAGC GATE PULSE
TRACK GATE PULSE
1000 FT SELF TEST DELAY CIRCUIT
SELF TEST GATE OPEN
RATE MAGNITUDE DETECTOR
TRACK ERROR CURRENT
FIXED REFERENCE VOLTAGE
TRACK/ NO TRACK DETECTOR
VIDEO FOLLOWER
VIDEO PULSES
KAGC AMP
KAGC PEAK DETECTOR
NOISE AGC PEAK DETECTOR
AGC AMP
AGC
READ CMD
ADVANCE 1 COUNT EACH TIME TH START-STOP M RESETS FROM
LOGIC MEMORY D TRACK=5V, NO T
RELIABILITY SI TRACK=4V, NO TR

BASIC REV E

DATE: 10/12/87	NAME: TMM	VERSION: BPT: 4
DATE: 11/19/87	NAME: BJT	VERSION: INR: 11
DATE: 08/22/90	NAME: SEW	VERSION: INR: 12

SELF TEST DATA VALUES			
TIME	RANGE	ELEVATION	AZIMUTH
0-3.2 SEC	15.2 N MI ± 0.2 N MI	6.0 DEG ± 0.1 DEG	+3 DEG ± 0.1 DEG
3.2-6.4 SEC	15.2 N MI ± 0.2 N MI	6.0 DEG ± 0.1 DEG	−3 DEG ± 0.1

TRACKER/DECODER 3

TRACKER/DECODER 2

TRACKER/DECODER 1

TRACKING GATE

ACCUMULATOR GATE (AGATE)

CLEAR A (CLRA)

I CTR CLOCK

TCLK TO 16 20μS

T CTR CONTR

TCTR

B REG

MAX/MIN INTERVAL DET

I CTR CONTR

ICTR

L REG

C CTR CONTR

C CTR

CC0 CC1 CC2 CC4

RIL

INTH

CLR

ICLK

AZIMUTH SIGN

FR/FL

DATA PROCESSOR

A-CTR CLOCK

STROBE A

AUP

ADWN

A-CTR (SUM OF INTERVALS)

DATA TAPS

A=0

Q-REGISTER

SUM OF INTERVALS / NUMBER OF INTERVALS = AVERAGE INTERVAL

Q-REG CONTROL

Q16(COMP)

LDS

SQE

ADDER

(COMP)

PROGRAMMER

CLOCK BUFFER

4 MHZ

DCLK

D CTR CLOCK

PSD1

PRESET D CTR TO 1

CLEAR D

D-COUNTER (NUMBER OF INTERVALS)

LOAD D

D=8

D=128

D=4

D=6

PROG CONTROL

NO. OF INTERVALS ≥ 9

NO. OF INTERVALS ≥ 128

COMPUTE

PROGRAM MEMORY

ANDIA

EOBP

START INTERROGATE MODE (SITM)

DSQ

ELQ

VALID BEAM (VLBM)

END OF VALID DATA (EVLDT)

ANGLE FLAG GEN

AZ FLAG GEN

TEST: NO DATA FOR 0.38 SEC.

AZIMUTH FLAG (AZFLG)

AZ MULTIBEAM DETECTOR

TEST: 2 BEAMS WITHIN 64MS

MULTI-BEAM (MULTI)

EL MULTIBEAM DETECTOR

TEST: 2 BEAMS WITHIN 64MS

EL FLAG GEN

TEST: NO DATA FOR 0.38 SEC.

ELEVATION FLAG (ELFLG)

CSPER

2MS

EVLDT

AZG

VLBM

ELG

8MS

MDM INTERFACE

MDM DATA (ANGLES AND DISTANCE)

ANGLE OR DISTANCE DATA AVAILABLE

AZIMUTH GATE

ELEVATION GATE

DISTANCE GATE

DISTANCE SHIFT REGISTER

ELEVATION SHIFT REGISTER

AZIMUTH SHIFT REGISTER

FR/FL

AZIMUTH FLAG (AZIMUTH VALIDITY)

ELEVATION FLAG (ELEVATION VALIDITY)

BIT 2 (ANGLE OR RANGE TEST)

BITE FLAG (AGC/XTAL CURRENT FAIL)

DISTANCE FLAG (RANGE VALIDITY)

PARITY

DATA SELECTOR AND MULTIPLEXER

MANCHESTER CODE GEN

SERIAL DATA

PARITY GEN

DATA WORD

TIMING AND CONTROL

RECEIVER

MESSAGE DISCRETE (GATE)

WORD DISCRETE (GATE)

BIT ON

CLOCK

8 MHZ OSC

FREQUENCY DIVIDER

8 MHZ

4 MHZ

2 MHZ

1 MHZ

.5μS

.25μS

.125μS

.064μS

.032μS

.016μS

1 MS

2 MS

4 MS

8 MS

V74 M10128 MLS 1 AZ DATA -32 TO +32 DEG 1 S/S C (M1112B) (M1212B)

V74 X1013B MLS 1 AZ TEST 1 = TEST 1 S/S C (X1113B) (X1213B)

V74 X1014B MLS 1 AZ VALIDITY 1=NONVALID 1 S/S C (X1114B) (X1214B)

V74 X1031B MLS 1 EL XT CUR FAIL 1 = FAIL 1 S/S C (X1131B) (X1231B)

V74 M10328 MLS 1 EL DATA 0 TO 32 DEG 1 S/S C (M1132B) (M1232B)

V74 X1033B MLS 1 EL TEST 1 = TEST 1 S/S C (X1133B) (X1233B)

V74 X1034B MLS 1 EL VALIDITY 1=NONVALID 1 S/S C (X1134B) (X1234B)

V74 X1051B MLS 1 RNG XT CUR FAIL 1 = FAIL 1 S/S C (X1151B) (X1251B)

V74 M1052B MLS 1 RNG DATA 0 TO 20.7 NM 1 S/S C (M1152B) (M1252B)

V74 X1053B MLS 1 RNG TEST 1 = TEST 1 S/S C (X1153B) (X1253B)

V74 X1054B MLS 1 RNG VALIDITY 1=NONVALID 1 S/S C (X1154B) (X1254B)

FF1 (FF2) (FF3)

MESSAGE REQUEST

WORD REQUEST

MLS 1 TEST V74K0108X (K0118X) (K0128X)

1. NOMINAL MLS HARDWARE LIMITS: AZ −15 TO +15 DEG (GND STA COVERAGE) EL 0 TO 30 DEG (GND STA COVERAGE) RNG 0 TO 19.9 NM (NAV SET LIMIT)
2. MLS WARMUP TIME: 3 MIN
3. MLS FDIR TRACKING TESTS LIMITS: RANGE 2000 FT AZIMUTH 0.5 DEG ELEVATION 0.4 DEG
4. THE PARENT WORDS OF THE PARAMETERS SHOWN, ARE ON THE DOWNLIST 1 S/S: MLS1(2,3) AZ WORD V74M1010P(1110P,1210P) EL WORD V74M1030P(1130P,1230P) RNG WORD V74M1050P(1150D,1250P)

CODE	DEFINITION
	A
ACQ	ACQUISITION MODE
AGATE	ACCUMULATOR CLOCK GATE
AGC	AUTOMATIC GAIN CONTROL
ANDIA	ANGLE OR DISTANCE AVAILABLE
AZFLG	AZIMUTH FLAG
AZG	AZIMUTH GATE
AZV	AZIMUTH VIDEO
	B
BFLG	BUILT IN TEST FLAG
BIT	BUILT IN TEST
BIT 2	BUILT IN TEST 2
BITON	BUILT IN TEST ON
BITTRIG	BUILT IN TEST TRIGGER PULSES
	C
CC1	CONTROL COUNTER 1 OUTPUT
CC2	CONTROL COUNTER 2 OUTPUT
CC4	CONTROL COUNTER 4 OUTPUT
CC0	CONTROL COUNTER GATE
CHN 1	CHANNEL 1
CHN 2	CHANNEL 2
CHN 3	CHANNEL 3
CHN 4	CHANNEL 4
CHN 5	CHANNEL 5
CHN 6	CHANNEL 6
CHN 7	CHANNEL 7
CHN 8	CHANNEL 8
CHN 9	CHANNEL 9
CHN 10	CHANNEL 10
CLRB	CLEAR B REGISTER
CLRA	CLEAR A REGISTER
CLRD	CLEAR D COUNTER
CLR11	CLEAR 1 COUNTER 1
Cn	CONTROL PULSE *n
COMP	COMPUTE MODE
CSA	CHANNEL SELECT A INPUT
CSB	CHANNEL SELECT B INPUT
CSC	CHANNEL SELECT C INPUT
CSP	CHANNEL SELECT PARITY INPUT
CSPER	CHANNEL SELECT PARITY ERROR
	D
D2	DATA COUNTER 2 BIT
D4	DATA COUNTER 4 BIT
D = 4	DATA COUNTER EQUALS 4
D = 6	DATA COUNTER EQUALS 6
DAGC	DISTANCE AGC
DATRG	DATA TRIGGER
DATT	DATA TAP
DCLK	DATA COUNTER CLOCK
DIV	DIVISION OPERATION
Dn	DATA COUNTER BINARY BIT n
DPCB	DATA PROCESSOR CONTROL B BIT
DSEVD	DISTANCE END OF VALID DATA
DSF128	DISTANCE FLAG COUNTER 128 BIT
DSF256	DISTANCE FLAG COUNTER 256 BIT
DSFLG	DISTANCE FLAG
DSG	DISTANCE GATE
DSQT	DEVELOP SQUITTER
DSSUB	DISTANCE SUBTRACT OPERATION
DSV	DISTANCE VIDEO
	E
ELG	ELEVATION GATE
ELFLG	ELEVATION FLAG
ELV	ELEVATION VIDEO
EOBCLK	END OF BEAM CLOCK
EOBP	END OF BEAM PULSE
EVLDT	END OF VALID DATA
	F
FR/FL	(HIGH) FLY RIGHT, OR (LOW) FLY LEFT
	G
GAGC	GLIDESLOPE AGC
GMLV	GATED HIGH LEVEL VIDEO
GINP	GATED INTERROGATE PULSE
GINT 2	GATED INTERROGATE 2 PULSE
GINT 2	GATED INTERROGATE *2 PULSE
GLLV	GATED 2 LOW LEVEL VIDEO
GRSE	GATED RESET

CODE	DEFINITION
	I
I1	I COUNTER 1 BIT
ICLK	I COUNTER CLOCK
IDTRG	IDENTIFY TRIGGER
IGTE	I COUNTER CLOCK GATE
IGTE	INTERVAL GATE
IMAX	INTERVAL IS A MAXIMUM
I>MIN	INTERVAL GREATER THAN MINIMUM
INTG	INTERROGATE GATE
INTH	INTERROGATE MODE
	L
LAGC	LOCALIZER AGC
LAZV	LEFT AZIMUTH VIDEO (FLY LEFT)
LNVD	LINEAR VIDEO
	M
MDMDT	MDM DATA TAP
MSG	MESSAGE
MSGIN	MESSAGE INPUT
MULTI	MULTI BEAM
	N
nMHZ	n MEGA HERTZ CLOCK
nMS	CLOCK WITH n MILLISECOND PERIOD
nUS	CLOCK WITH n MICROSECOND PERIOD
	P
PDEVA	PERCENTAGE DEVIATION AVAILABLE
PLUS GS	PLUS GLIDESLOPE OUTPUT
POS	REPOSITION ANSWER
PROS	SYSTEM PROCESSING
PROS	SYSTEM PROCESSING
PSD1	PRESET DATA COUNTER TO 1
PS/SB	POSITION OR SUBTRACT OPERATION
	Q
QLLV	QUANTIZED LOW LEVEL VIDEO
	R
RAZV	RIGHT AZIMUTH VIDEO (FLY RIGHT)
RECY	RECYCLE
RIB	READ I COUNTER INTO B REGISTER
RIL	READ I COUNTER INTO L REGISTER
RSAD	RESET ANGLE DATA
RSHD	RESET HOLD
RTRK	RESET TRACK MODE
	S
SCLK	SELECTED CLOCK
SIGN	SIGN OF THE INTERVAL
SITM	START INTERROGATE MODE
SIVD	STRETCHED IDENTIFIED VIDEO
SRCH	SEARCH MODE
SRLDT	SERIAL DATA
STEN	SPECIAL TEST EQUIPMENT ENABLE
STP1	STOP 1 COUNTER
STPT	STOP 1 COUNTER
STRC	START CONTROL COUNTER
SUB	SUBTRACT OPERATION
SUB-1	SUBTRACT-1 OPERATION
	T
T=0	T COUNTER EQUALS TO 0
T4	T COUNTER 4 BIT
T8	T COUNTER 8 BIT
T16	T COUNTER 16 BIT
TCLK	T COUNTER CLOCK
TG	TRACK GATE
TLG	TRACK LEVEL GATE
TRK	TRACK MODE
TV	TRACKED VIDEO
TVAL	TRACK GATE VALIDATED
	V
VID	DECODED VIDEO
VLBM	VALID BEAM
VLDM	VALID BEAM
	W
WRDSC	WORD DISCREET

SERIAL DATA FORMAT

TEST STATUS BITS (ALL)
0 = NOT IN TEST
1 = PERFORMING SELF TEST

VALIDITY BITS (ALL)
0 = VALID DATA
1 = NON VALID DATA

AZIMUTH ANGLE WORD

WORD SYNC | SIGN | 13 | 8 | 4 | 2 | 1 | .5 | .25 | .125 | .064 | .032 | .016 | SPARE | SPARE | VALIDITY | PARITY

SIGN BIT
0 = PLUS OR FLY LEFT (RIGHT OF CENTERLINE)
1 = MINUS OR FLY RIGHT (LEFT OF CENTERLINE)

ELEVATION ANGLE WORD

WORD SYNC | SIGN | 13 | 8 | 4 | 2 | 1 | .5 | .25 | .125 | .064 | .032 | .016 | SPARE | SPARE | VALIDITY | PARITY

SIGN BIT FOR ELEVATION AND RANGE WORDS
0 = NORMAL DATA
1 = AGC FAILURE DURING SELF-TEST, OR MIXER CRYSTAL CURRENT FAILURE

RANGE WORD

WORD SYNC | SIGN | 16 | 8 | 4 | 2 | 1 | .5 | .25 | .125 | .064 | .032 | .016 | SPARE | SPARE | VALIDITY | PARITY

FLAG (INVALID) CONDITIONS

AZ/EL { OR NO DATA FOR 380 MS; OR 2 AZ OR 2 EL WITHIN 64 MS; OR ≥8 OR ≥128 CONSECUTIVE PULSE PAIRS

DISTANCE { OR NO DATA FOR 200 MS; OR ≥8 REPLIES TO 16 INTERROGATIONS

UNFLAG (VALIDITY) REQUIREMENTS

8 CONSECUTIVE VALID BEAMS

1 VALID REPLY

4 MLS

SIGNATURE		DATE
DSGN	J. D HOLMES	6/6/79
DR		
ENGR	J.M. WEBB	8/17/90
ENGR		9/4/90
APP		9/10/90
		9/10/90
CHK(PLAN.S)	K Kimbrell	9/11/90

NATIONAL AERONAUTICS AND SPACE ADMINISTRATION LYNDON B. JOHNSON SPACE CENTER HOUSTON, TEXAS

MICROWAVE SCANNING BEAM LANDING SYSTEM

SPACE SHUTTLE | DWG NO 9.4

ALL

LTR E | PCN | 126.5 X 34 | PAGE | SHEET 1 OF 1

BASIC REV E

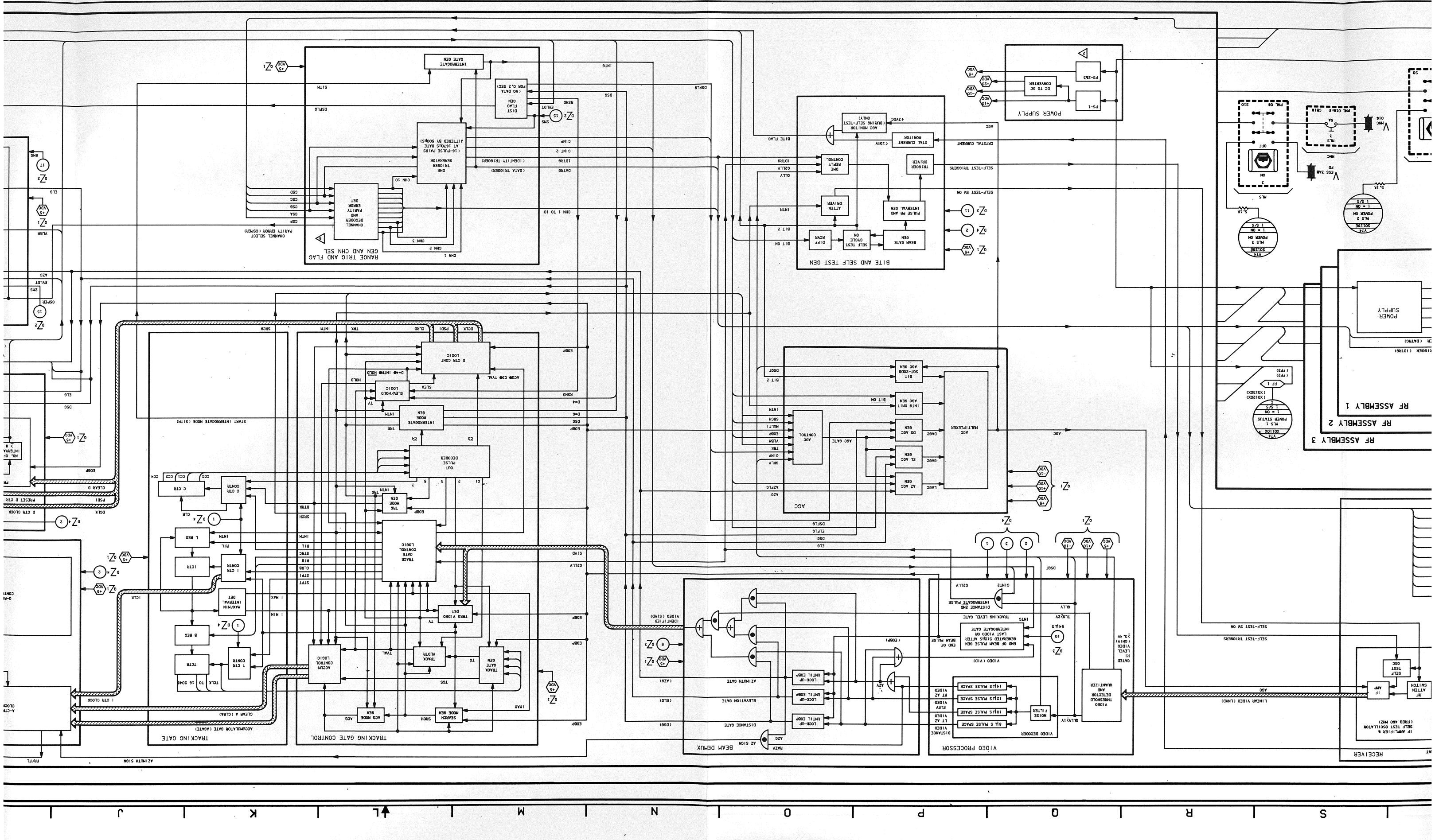
POWER SUPPLY
BITE AND SELF TEST GEN
RANGE TRIG AND FLAG GEN AND CHN SEL
TRACKING GATE CONTROL
TRACKING GATE
BEAM DEMUX
AGC
VIDEO PROCESSOR
RECEIVER
RF ASSEMBLY 1
RF ASSEMBLY 2
RF ASSEMBLY 3
IF AMPLIFIER & SELF TEST OSCILLATOR (FREQ 460 MHZ)
POWER SUPPLY
DC TO DC CONVERTER
PS-1
PS-2&3
+5VDC
+10VDC
-10VDC
+15VDC
-15VDC
+13VDC
AGC MONITOR (DURING SELF-TEST ONLY)
XTAL CURRENT MONITOR
DME REPLY CONTROL
DME TRIGGER DRIVER
ATTEN DRIVER
PULSE PR AND INTERVAL GEN
BEAM GATE GEN
SELF TEST CYCLE ON
DIFF REVR
CRYSTAL CURRENT
SELF-TEST TRIGGERS
SELF-TEST SW ON
BIT FLAG
BIT ON
INTM
DME TRIGGER GENERATOR (16-PULSE PAIRS AT 16TGLS RATE JITTERED BY 500/S)
DIST FLAG GEN (NO DATA FOR 0.2 SEC)
INTERROGATE GATE GEN
CHANNEL DECODER AND PARITY ERROR DET
CHANNEL SELECT
PARITY ERROR (CSPER)
CHN 1 TO 10
CHN 1
CHN 2
CHN 3
CHN 10
DATRG
IDTRG
GINT 2
GINT
GLLY
AGC
CRYSTAL CURRENT
SELF-TEST TRIGGERS
SELF-TEST SW ON
BIT FLAG
BIT ON
INTM
DSOT
DSTLG
ELFLG
DSG
ELG
AZFLG
AZG
DSHD
D=4
D=6
COBP
SRCH
MULTI
VLBM
DMLY
GINP
TRK
DAGC
LAGC
EL AGC GEN
AZ AGC GEN
DS AGC GEN
RT AZ VIDEO
ELEV VIDEO
LT AZ VIDEO
DISTANCE VIDEO
8 BIT SAT-2008 AGC GEN
INTO XMIT AGC GEN
AGC MULTIPLEXER
AGC CONTROL
AGC GATE
AGC
AZ
RAZV
AZ SIGN
AZIMUTH GATE
ELEVATION GATE
DISTANCE GATE
LOCK-UP UNTIL COBP
IDENTIFIED VIDEO (SIVD)
SIVD
GZLLY
TLG-2V
64µS
10
END OF BEAM PULSE GENERATED 512µS AFTER LAST VIDEO ON
TRACKING LEVEL GATE
DISTANCE 2ND INTERROGATE PULSE
GINT2
VIDEO (VID)
GATED HI LEVEL VIDEO (GHIV) 2.4V
VIDEO THRESHOLD DETECTOR AND QUANTIZER
VIDEO DECODER
NOISE FILTER
8µS PULSE SPACE
12µS PULSE SPACE
10µS PULSE SPACE
14µS PULSE SPACE
LINEAR VIDEO (LNEG)
IF AMP
RF SWITCH
SELF TEST OSC
SELF-TEST SW ON
SELF-TEST TRIGGERS
TRIGGER (IDTRG)
DATRG
DME TRIGGER GENERATOR (16-PULSE PAIRS AT 16TGLS RATE JITTERED BY 500/S)
DIST FLAG GEN (NO DATA FOR 0.2 SEC)
INTERROGATE GATE GEN
CHANNEL DECODER AND PARITY ERROR DET
CHANNEL SELECT
PARITY ERROR (CSPER)
CHN 1 TO 10
CHN 1
CHN 2
CHN 3
CHN 10
DATRG
IDTRG
GINT 2
GINT
S1TM
DSFLG
DSG
RSHD
EVLOT
2MS
CSD
CSC
CSB
CSA
CSP
ELG
VLBM
AZG
CSPER
INTERROGATE MODE 2 &
NO. OF PULSES IN INTERROGATE MODE
D CTR CLOCK
PRESET D CTR
CLEAR D
PSDI
DCLK
D CTR CLOCK
COBP
START INTERROGATE MODE (S1TM)
ACQUISITION GATE (AQGTD)
CLEAR A (CLRA)
I CTR CLOCK
TCLK TO 16 2048
TCLK
D CTR CONT LOGIC
D=4Ø INTM HOLD
SLEW/HOLD LOGIC
SLEW
HOLD
INTERROGATE MODE GEN
TRK MODE GEN
OUT PULSE DECODER
C1 C2 C3 C4
C CTR
CCLR
CC1 CC2
CC4
L REG
ICTR
I CTR CONTR
MAX/MIN INTERVAL DET
B REG
TCTR
T CTR CONTR
ACCUM CONTROL LOGIC
TRACK GATE CONTROL LOGIC
TRKD VIDEO DET
TRACK VLDTR
TRACK GATE GEN
SEARCH MODE GEN
ACQ MODE GEN
ACQ
TSG
TVLAL
TG
TV
RTRK
SRCH
RIL
STMC
RIB
CLRB
STPI
I MAX
I MIN
IMAX
ACCB CØB TVAL
ACQB INTMB HOLD
EOBP
PSDI
CLRD
TRK
INTM
SRCH
DCLK
AZIMUTH SIGN
RR/FL
ELG
DSG
DSFLG
S1TM
INTM
TRK
EOBP
RSHD
D=4
D=6
DSG
EOBP
EVLOT
2MS
S1VD
GZLLY
TRKD VIDEO DET
TRACK VLDTR
TRACK GATE GEN
SEARCH MODE GEN
ACQ MODE GEN
TSG
TG
TV
IMAX
(EOBP)
(AZG)
(ELG)
(DSG)
(DSOT)
(GHIV)
(FP2)
(FP3)
FP 1
(XO120X)
(XO110X)
XO110X
PS 1
POWER STATUS
1 = ON
0 = S/S
V74
501136
PWR ON
PWR 1
POWER ON
1 = ON
0 = S/S
V74
501136
PWR ON
1 = ON
0 = S/S
PWR 2
POWER ON
1 = ON
0 = S/S
PWR 3
POWER ON
1 = ON
0 = S/S
PWR 4
POWER ON
1 = ON
0 = S/S
PWR 5
POWER ON
1 = ON
0 = S/S
PWR

DATE: 08/22/90 | NAME: JEW | VERSION: INR: 12

W V U T S R Q P O N

8 7 6 5 4 3 2 1

GROUND STATION RADIATION

PARAMETER	TIME ALLOCATION	COVERAGE AZIMUTH	COVERAGE ELEVATION
DISTANCE	40.000 MS	±15 DEG	0 TO 23 DEG
GUARD	14.875 MS	---	---
AZIMUTH	44.290 MS	±15 DEG	0 TO 23 DEG
GUARD	14.875 MS	---	---
ELEVATION	85.960 MS	±20 DEG	0 TO 30 DEG
	200.000 MS/DATA CYCLE		

TIME ALLOCATION

DISTANCE	G	AZIMUTH	G	ELEVATION

200 MS

DISTANCE SOLICIT SIGNAL (14 PULSE PAIRS/SCAN)

AZIMUTH SIGNAL

ELEVATION SIGNAL

DISTANCE INTERROGATE SIGNAL (16 PULSE PAIRS/SCAN)

DISTANCE REPLY SIGNAL

RECEIVER

RUNWAY	CHANNEL
KSC15	8
KSC 33	6
EDW 17	6
EDW 22	8
NOR 17	8
VAFB 12	TBD
VAFB 30	TBD
DAKAR 1	8

CH NO.	R'CD SIGNAL FREQ-GHZ
1	15.412
2	15.436
3	15.484
4	15.508
5	15.532
6	15.568
7	15.592
8	15.616
9	15.664
10	15.688

LOCAL OSCILLATOR	14.952 GHZ
CHAN 1	14.976 GHZ
CHAN 2	15.024 GHZ
CHAN 3	15.048 GHZ
CHAN 4	15.072 GHZ
CHAN 5	15.108 GHZ
CHAN 6	15.132 GHZ
CHAN 7	15.156 GHZ
CHAN 8	15.204 GHZ
CHAN 9	15.228 GHZ
CHAN 10	

CRYSTAL CURRENT

MIXER

IF AMPLIFIER & SELF TEST OSCILLATOR (FREQ 460 MHZ)

RF ATTEN SWITCH

IF AMP

SELF TEST OSC

ISOLATOR

RF FILTER

LIMITER

LINEAR VIDEO (LNVD)

AGC

SELF-TEST TRIGGERS

SELF-TEST SV ON

VIDEO PROCESSOR

VIDEO THRESHOLD DETECTOR AND QUANTIZER

GATED HI LEVEL VIDEO (GHIV) ≥3.4V

QLLV≥1V

VIDEO DECODER

NOISE FILTER

8µS PULSE SPACE

10µS PULSE SPACE

12µS PULSE SPACE

14µS PULSE SPACE

DISTANCE VIDEO

LT AZ VIDEO

ELEV VIDEO

RT AZ VIDEO

VIDEO (VID)

END OF BEAM PULSE GEN GENERATED 51µS AFTER LAST VIDEO OR INTERROGATE GATE

END OF BEAM PULSE

INTG

TRACKING LEVEL GATE

TLG≥2V

QLLV

DISTANCE 2ND INTERROGATE PULSE

G1NT2

G2LLV

DSQT

BEAM DEMUX

RAZV

AZ SIGN

AZG

LOCK-UP UNTIL EOBP

DISTANCE GATE

(DSG)

ELEVATION GATE

(ELG)

AZIMUTH GATE

(AZG)

(EOBP)

IDENTIFIED VIDEO (SIVD)

AGC

AZG

AZFLG

GNLV

GINP

TRK

VLBM

EOBP

MULTI

SRCH

INTM

AZ AGC GEN

EL AGC GEN

DS AGC GEN

INTG XMIT AGC GEN

BIT SOT-200B AGC GEN

AGC MULTIPLEXER

AGC CONTROL

AGC GATE

BIT ON

BIT 2

DSQT

ELG

DSG

ELFLG

DSFLG

DSFLG

BITE AND SELF TEST GEN

BEAM GATE GEN

SELF TEST CYCLE ON

DIFF RCVR

PULSE PR AND INTERVAL GEN

ATTEN DRIVER

TRIGGER DRIVER

DME REPLY CONTROL

XTAL CURRENT MONITOR

<15mV

AGC MONITOR (DURING SELF-TEST ONLY)

<3VDC

BIT ON

BIT 2

INTM

QLLV

G2LLV

IDTRG

BITE FLAG

POWER SUPPLY

PS-1

PS-243

DC TO DC CONVERTER

MLS

CHANNEL

CSA

CSB

CSC

CSD

CSP

PNL 08

S11

RF ASSEMBLY 3

RF ASSEMBLY 2

RF ASSEMBLY 1

MODULATOR

CHANNEL NO.	PULSE PAIR Δ T (DATA TRIG-ID TRIG)
1	11µS
2	13µS
3	15µS
4	17µS
5	19µS
6	21µS
7	23µS
8	25µS
9	27µS
10	29µS

IDENTITY TRIGGER (IDTRG)

DATA TRIGGER (DATRG)

+280 VDC

+15 VDC

+7 VDC

+5 VDC

-8 VDC

POWER SUPPLY

MAGNETRON

(15.460 GHZ) (0.3µS PULSE) (2.0 KW PEAK)

ANT	Z_0	X_0
2	367.20	261.55
3	368.52	261.36
1	369.26	261.27

MSBLS ANTENNAS (KU-BAND)

ORBITER UPPER FUSELAGE

V74 X0110X MLS 1 POWER STATUS 1 = ON 1 S/S

(X0120X) (X0130X)

FF 1

(FF2) (FF3)

V74 S0109E MLS 1 POWER ON 1 = ON 1 S/S

V74 S0119E MLS 2 POWER ON 1 = ON 1 S/S

V74 S0129E MLS 3 POWER ON 1 = ON 1 S/S

5.1K

$V_{ESS\ 1BC}$ FD

$V_{MNA\ 014}$

MNA

PNL 014E CB25

$V_{ESS\ 2CA}$ FD

$V_{MNB\ 015}$

MNB

PNL 015E CB24

$V_{ESS\ 3AB}$ FD

$V_{MNC\ 016}$

MNC

PNL 016E CB18

PNL 08 S8

PNL 08 S9

PNL 08 S10

BASIC REV E

DATE: 05/23/87	NAME: JB	VERSION: BPT: 3
DATE: 11/02/87	NAME: VCO	VERSION: INK: 2
DATE: 08/22/90	NAME: SEV	VERSION: INK: 3

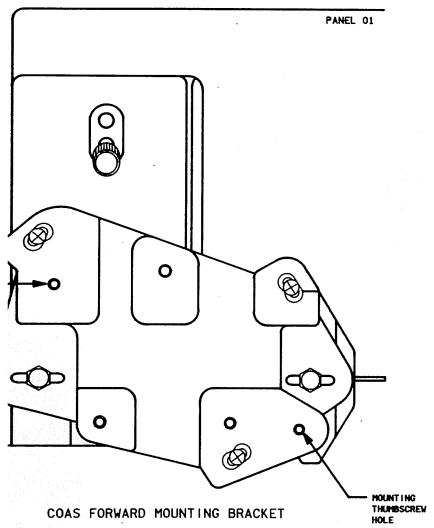

COAS FORWARD MOUNTING BRACKET

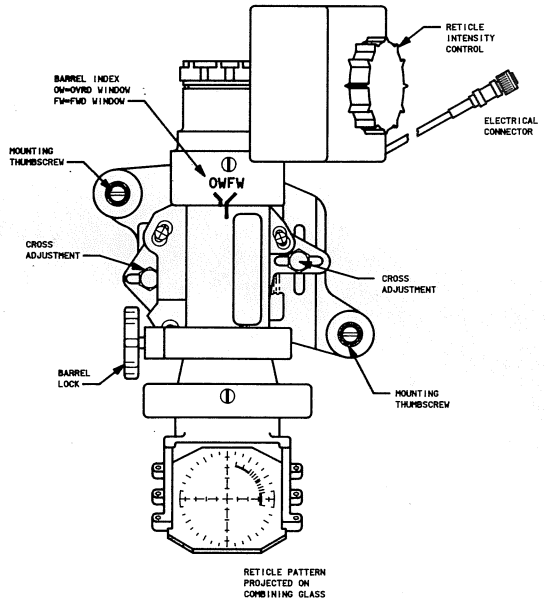

COAS (OPERATIONAL VIEW)

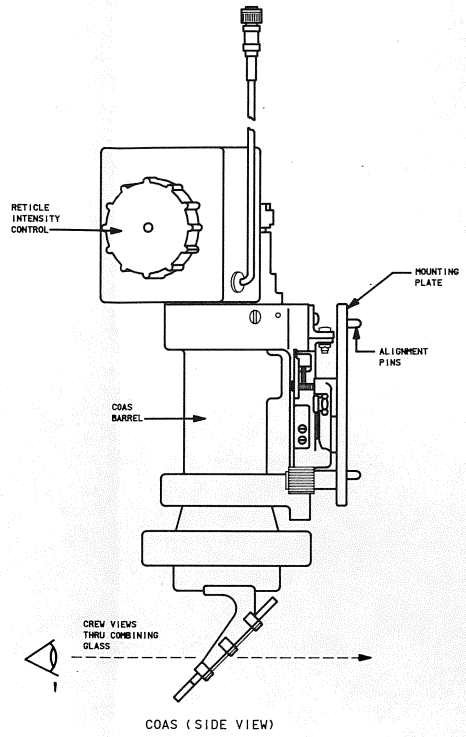

COAS (SIDE VIEW)

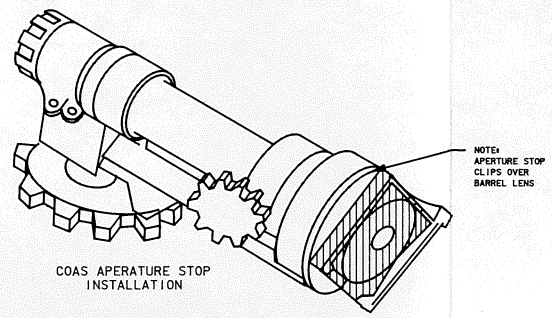

COAS APERATURE STOP INSTALLATION

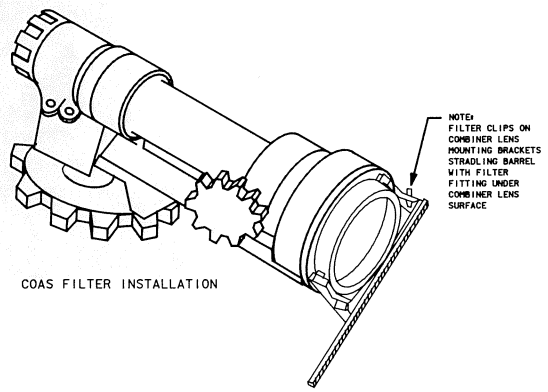

COAS FILTER INSTALLATION

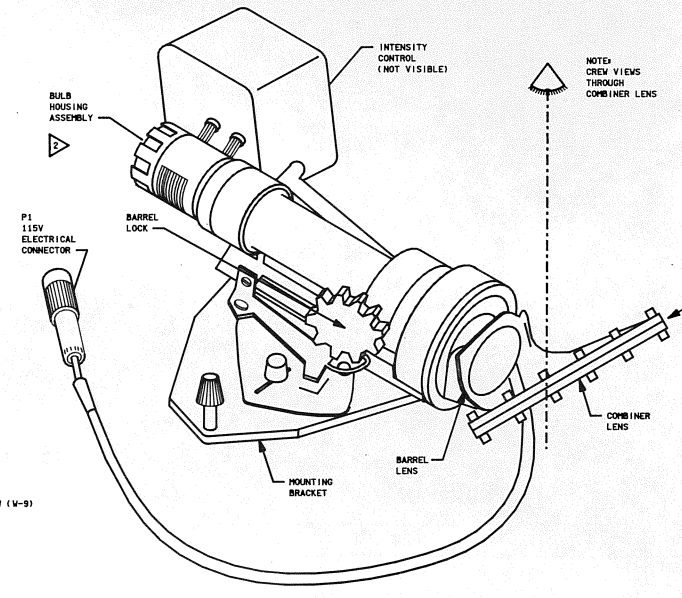

CREWMAN OPTICAL ALIGNMENT SIGHT

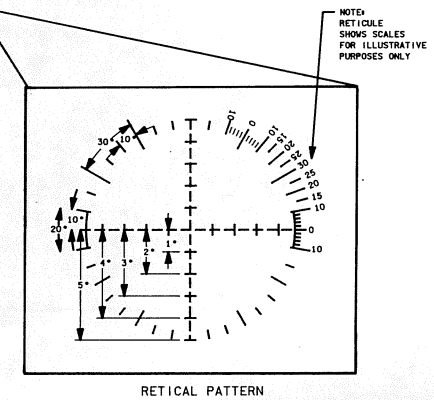

RETICAL PATTERN

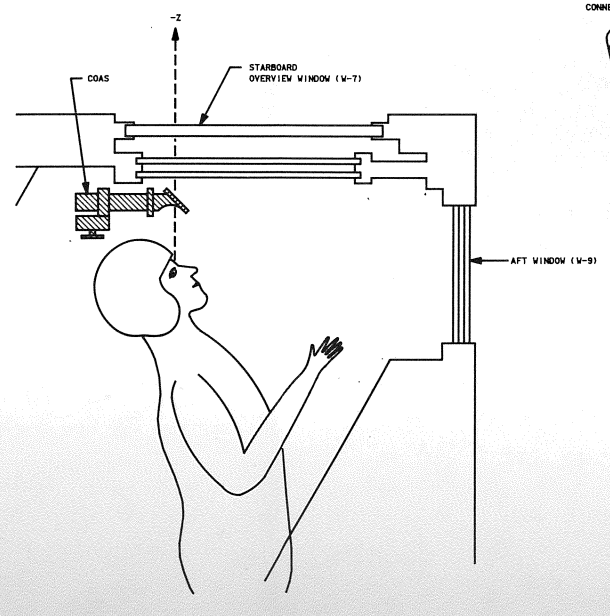

AFT STATION (-Z AXIS)

▷ CONTINGENCY PROCEDURE
- CAN REMOVE LIGHT BULB AND SHINE A FLASHLIGHT THROUGH THE BARRELL TO ILLUMINATE RETICLE
- RETICLE BRIGHTNESS CAN BE CONTROLLED BY VARYING THE ANGLE OF THE FLASHLIGHT

NOTES: ▷
- AUTOMATIC RESET ON AMBIENT TEMPERATURE
- COAS MOUNTS IN DOCKING WINDOW (-Z AXIS) OR FORWARD WINDOW (+X AXIS) AND CAN BE STOWED DURING MANEUVERS
- COAS RETAINS CALIBRATION WITH REMOUNTING IN SAME WINDOW
- 2 SPARE BULBS ARE SUPPLIED IN CARRYING CASE

5 COAS

COAS CONFIGURATION AND OPERATION

SIGNATURE	DATE	NATIONAL AERONAUTICS AND SPACE ADMINISTRATION LYNDON B. JOHNSON SPACE CENTER HOUSTON, TEXAS
DSGN LMB	5/29/75	
DR		
ENGR M.T. SEVERANCE	8/17/90	COAS
ENGR	7-5-90	
APP	7/6/90	
APP	7/6/90	SPACE SHUTTLE / DWG NO 9.5
CHKD PLAN 5 X 8 OVERSIZE	9-5-90	ALL
LTR E PCN		93.5 X 34 / PAGE / SHEET 1 OF 1

BASIC REV E

DATE= 08/22/90 | NAME= SEV | VERSION= INK.3

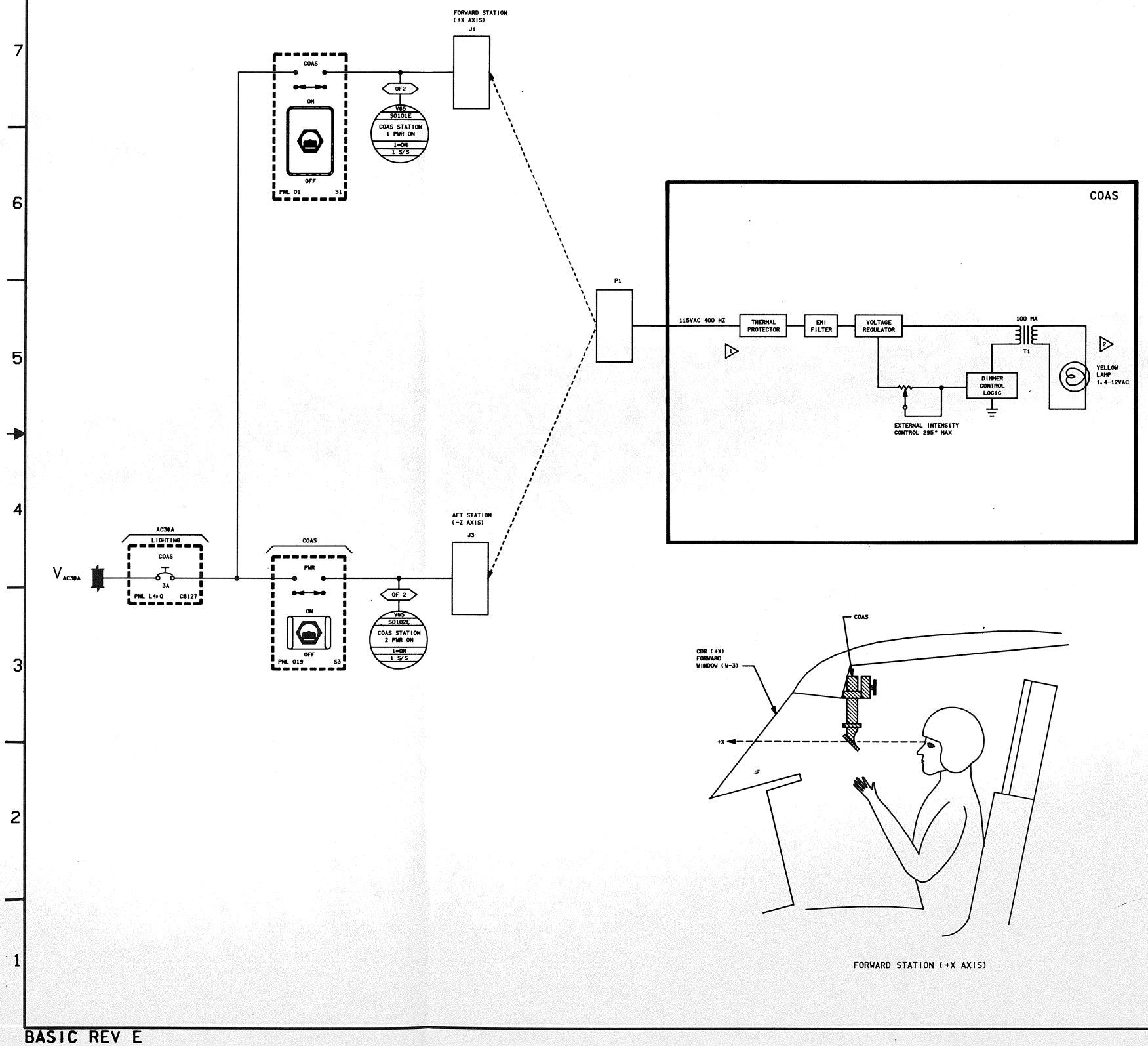

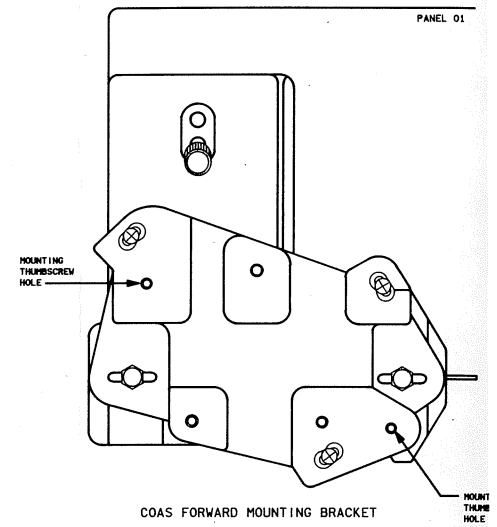

COAS FORWARD MOUNTING BRACKET

FORWARD STATION (+X AXIS)

BASIC REV E

DATE: 08/22/95	NAME: MDU	VERSION: BPT.8
DATE: 01/10/96	NAME: LAM	VERSION: INK.5
DATE: 03/22/96	NAME: VSH	VERSION: INK.6

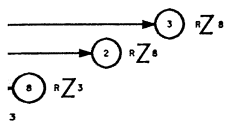

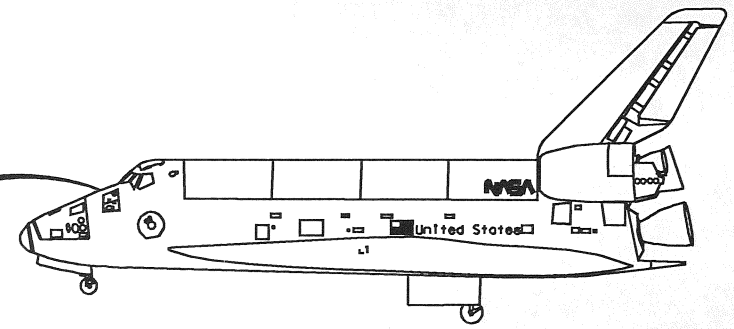

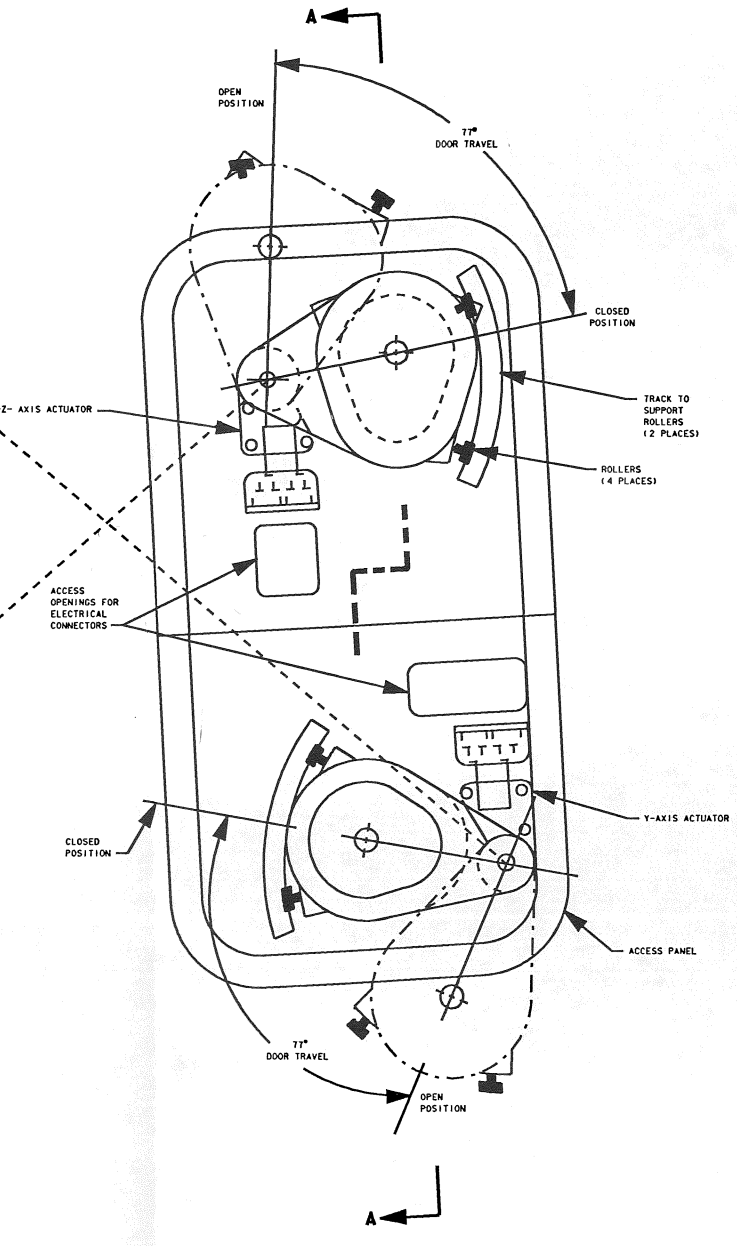

VIEW LOOKING INBOARD

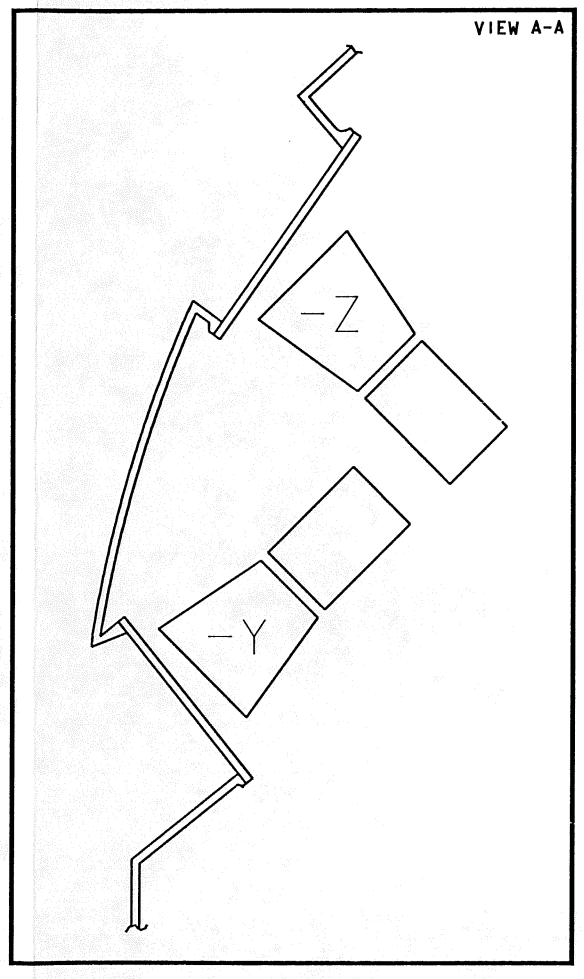

NOTES: 1. THREE POLES OF EACH HYBRID RELAY ARE SHOWN ON THIS DRAWING AND ARE USED FOR MOTOR ROTATION CONTROL. EACH RELAY CONTAINS A FOURTH POLE USED FOR OPERATIONAL STATUS WHICH IS SHOWN ON DRAWING 2.4-1

6 STAR 1

SIGNATURE	DATE	NATIONAL AERONAUTICS AND SPACE ADMINISTRATION LYNDON B. JOHNSON SPACE CENTER HOUSTON, TEXAS	
DSGN V. DOGGETT	1/10/79		
DR V. DOGGETT	1/10/79	STAR TRACKER	
ENGR E. TRLICA			
ENGR	4/24/96		
APP	4/24/96		
APP	7/1/96	SPACE SHUTTLE	DWG NO 9.6
CADS	7/5/96	ALL	
LTR E	PCN 6	104.5 X 34	PAGE SHEET 1 OF 3

BASIC REV E-6

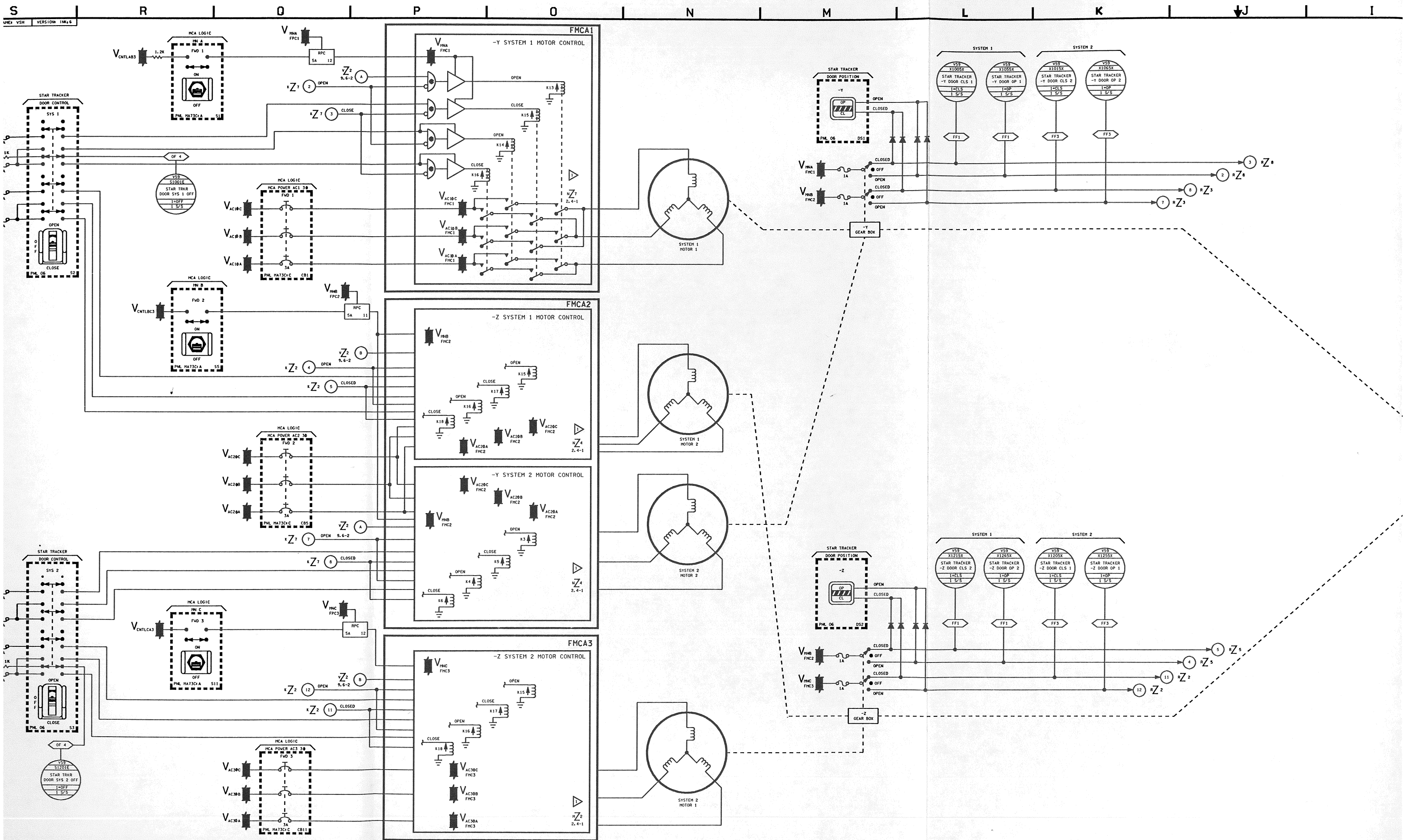

S R Q P O N M L K J I
FMCA1
-Y SYSTEM 1 MOTOR CONTROL
FMCA2
-Z SYSTEM 1 MOTOR CONTROL
-Y SYSTEM 2 MOTOR CONTROL
FMCA3
-Z SYSTEM 2 MOTOR CONTROL
STAR TRACKER DOOR CONTROL
STAR TRACKER DOOR POSITION
MCA LOGIC
SYSTEM 1
SYSTEM 2
SYSTEM 1 MOTOR 1
SYSTEM 1 MOTOR 2
SYSTEM 2 MOTOR 2
SYSTEM 2 MOTOR 1
-Y GEAR BOX
-Z GEAR BOX

DATE: 03/22/96 | NAME: VSH | VERSION: INK6

FMCA1 -Y SYSTEM 1 MOTOR CONTROL

FMCA2 -Z SYSTEM 1 MOTOR CONTROL

-Y SYSTEM 2 MOTOR CONTROL

FMCA3 -Z SYSTEM 2 MOTOR CONTROL

STAR TRACKER DOOR CONTROL SYS 1

STAR TRACKER DOOR CONTROL SYS 2

STAR TRACKER DOOR POSITION -Y

STAR TRACKER DOOR POSITION -Z

MCA LOGIC MCA POWER AC1 3Φ FWD 1

MCA LOGIC MCA POWER AC2 3Φ FWD 2

MCA LOGIC MCA POWER AC3 3Φ FWD 3

SYSTEM 1 MOTOR 1

SYSTEM 1 MOTOR 2

SYSTEM 2 MOTOR 2

SYSTEM 2 MOTOR 1

-Y GEAR BOX

-Z GEAR BOX

BASIC REV E-6

DATE:	NAME:	VERSION:
DATE: 09/28/93	NAME: VSH	VERSION: INK: 10
DATE: 09/29/93	NAME: VSH	VERSION: INK: 11
DATE: 10/04/93	NAME: JDF	VERSION: INK: 12

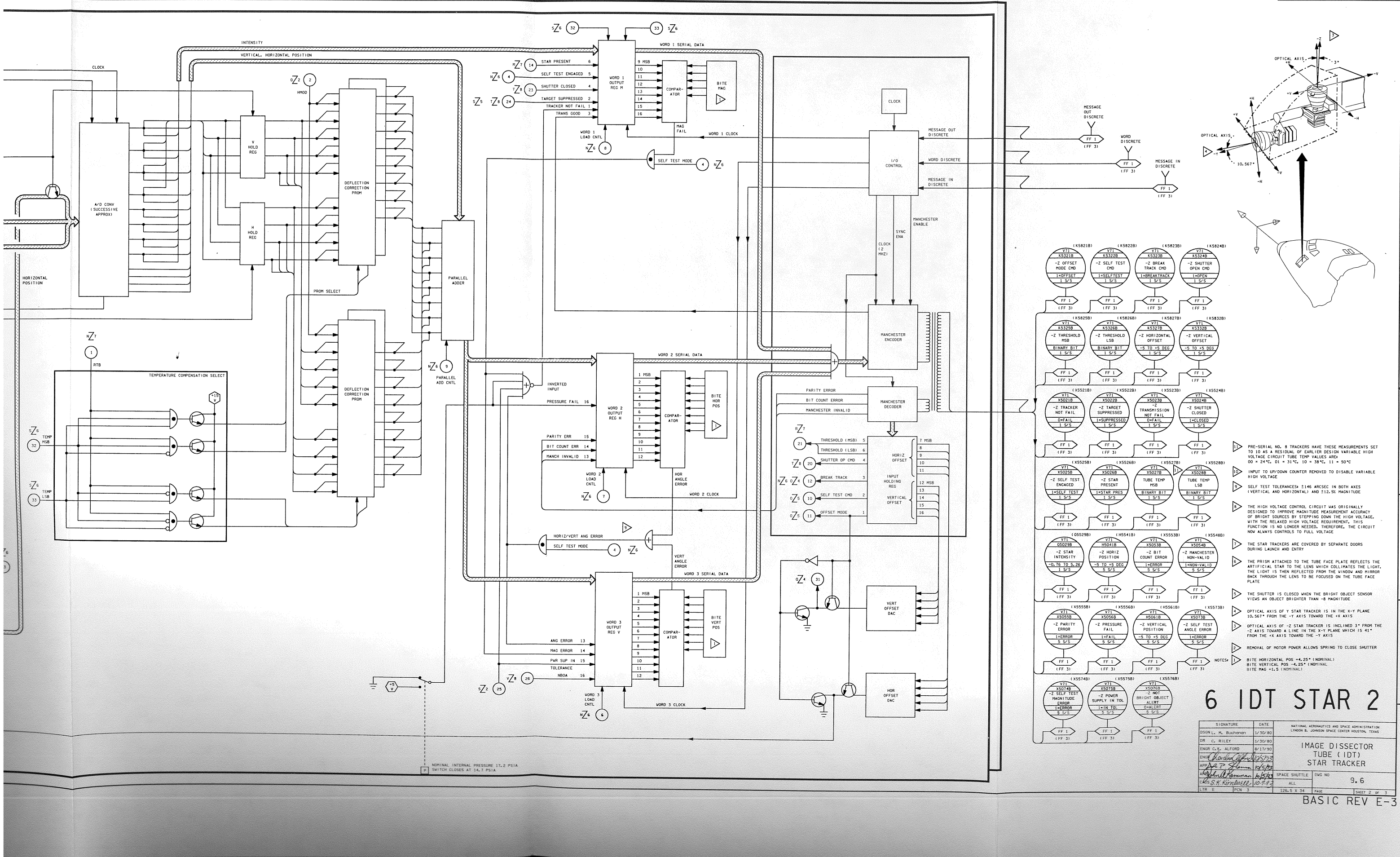

NOTES:

1. PRE-SERIAL NO. 8 TRACKERS HAVE THESE MEASUREMENTS SET TO 10 AS A RESIDUAL OF EARLIER DESIGN VARIABLE HIGH VOLTAGE CIRCUIT TUBE TEMP VALUES ARE: 00 = 24°C, 01 = 31°C, 10 = 38°C, 11 = 50°C
2. INPUT TO UP/DOWN COUNTER REMOVED TO DISABLE VARIABLE HIGH VOLTAGE
3. SELF TEST TOLERANCES: ±146 ARCSEC IN BOTH AXES (VERTICAL AND HORIZONTAL) AND ±12.5% MAGNITUDE
4. THE HIGH VOLTAGE CONTROL CIRCUIT WAS ORIGINALLY DESIGNED TO IMPROVE MAGNITUDE MEASUREMENT ACCURACY OF BRIGHT SOURCES BY STEPPING DOWN THE HIGH VOLTAGE. WITH THE RELAXED HIGH VOLTAGE REQUIREMENT, THIS FUNCTION IS NO LONGER NEEDED. THEREFORE, THE CIRCUIT NOW ALWAYS CONTROLS TO FULL VOLTAGE
5. THE STAR TRACKERS ARE COVERED BY SEPARATE DOORS DURING LAUNCH AND ENTRY
6. THE PRISM ATTACHED TO THE TUBE FACE PLATE REFLECTS THE ARTIFICIAL STAR TO THE LENS WHICH COLLIMATES THE LIGHT. THE LIGHT IS THEN REFLECTED FROM THE WINDOW AND MIRROR BACK THROUGH THE LENS TO BE FOCUSED ON THE TUBE FACE PLATE
7. THE SHUTTER IS CLOSED WHEN THE BRIGHT OBJECT SENSOR VIEWS AN OBJECT BRIGHTER THAN -8 MAGNITUDE
8. OPTICAL AXIS OF Y STAR TRACKER IS IN THE X-Y PLANE 10.567° FROM THE -Y AXIS TOWARD THE +X AXIS
9. OPTICAL AXIS OF -Z STAR TRACKER IS INCLINED 3° FROM THE -Z AXIS TOWARD A LINE IN THE X-Y PLANE WHICH IS 41° FROM THE +X AXIS TOWARD THE -Y AXIS
10. REMOVAL OF MOTOR POWER ALLOWS SPRING TO CLOSE SHUTTER
11. BITE HORIZONTAL POS +4.25° (NOMINAL)
    BITE VERTICAL POS -4.25° (NOMINAL
    BITE MAG +1.5 (NOMINAL)

6 IDT STAR 2

SIGNATURE		DATE	
DSGN	L. M. Buchanan	1/30/80	NATIONAL AERONAUTICS AND SPACE ADMINISTRATION LYNDON B. JOHNSON SPACE CENTER HOUSTON, TEXAS
DR	C. RILEY	1/30/80	
ENGR	C.K. ALFORD	8/17/90	IMAGE DISSECTOR TUBE (IDT) STAR TRACKER
ENGR	[signature]	10/5/93	
APP	[signature]	10/5/93	
APP	[signature]	10/5/93	SPACE SHUTTLE
APP	[signature]	10.7.93	ALL
LTR	E	PCN	3

DWG NO 9.6

126.5 X 34

PAGE SHEET 2 OF 3

BASIC REV E-3

POWER SUPPLY

220 VAC

+60V

VOLTAGE REGULATOR

VOLTAGE MULTIPLIER

HIGH VOLTAGE CONTROL (NO LONGER USED)

SCAN OSCILLATOR

TRACK ENABLE

HORIZONTAL DEFLECTION AMP

HORIZONTAL SUMMING AMP

HORIZ POSITION DETECTOR

VERTICAL DEFLECTION AMP

VERTICAL SUMMING AMP

VERT POSITION DETECTOR

TRAILING EDGE ENABLE

LEADING EDGE PULSE

TRAILING EDGE PULSE

TRACK PATTERN SIZE CONTROL

TRAILING EDGE SAMPLE PULSE

LEADING EDGE SAMPLE PULSE

THRESHOLD DETECTOR

PEAK DETECTOR

MASTER CONTROL UNIT

END OF CONVERSION

A/D CONV (SUCCESSIVE APPROX)

TEMPERATURE COMPENSATION

INTENSITY

VERTICAL POSITION

HORIZONTAL POSITION

CLOCK

TRACK

H MOD

V MOD

RTB

TLD

OFFSET H

V OFFSET

STAIRCASE GENERATOR

≈ 175 STEPS IN FULL FIELD SEARCH ≈ 17 STEPS IN OFFSET MODE

VIDEO SAMPLE ENABLE

FIELD OF VIEW DISCRIMINATOR

RETRACE BLANKING (RTB)

START CONV

PROCESSING SEQUENCER

PARALLEL ADD CTL

WORD 1 LOAD CTL

WORD 2 LOAD CTL

WORD 3 LOAD CTL

SELF TEST MODE

OFFSET MODE CMD

SELF TEST CMD

TOT SUPP

TUBE TEMP ENCODER

TEMP LSB

TEMP MSB

DEFLECTION SELECTION LOGIC

H MOD (DESCENDING RAMP) BI LEVEL

AMPLITUDE CONTROL

FREE RUNNING OSC ≈ 7.5 KHZ IN SEARCH ≈ 24 KHZ IN TRACK

DIVIDE BY 8 COUNTER

COUNTER ENABLE

UP DOWN COUNTER (2 BITS)

HIGH VOLTAGE CONTROL SIGNAL

CAPACITANCE VOLTAGE MULTIPLIER (X2)

CAPACITANCE VOLTAGE MULTIPLIER (X7)

TRIMMING CIRCUIT

POWER SUPPLY BITE

(POWER SUPPLY IN TOLERANCE)

PSS

THRESHOLD (CMD) (MSB)

THRESHOLD (LSB)

THRESHOLD LEVEL GENERATOR

V PEAK

VIDEO FILTER

VIDEO ENABLE

STAR PRESENT

50 KC CLOCK

1 MS

2 MS

10 MS

5 MS

10µ SEC

BREAK TRK

FOV

SET

CLR

J

K

Q

D

CX

CMD

S

R

P

O

N

M

L

K

J

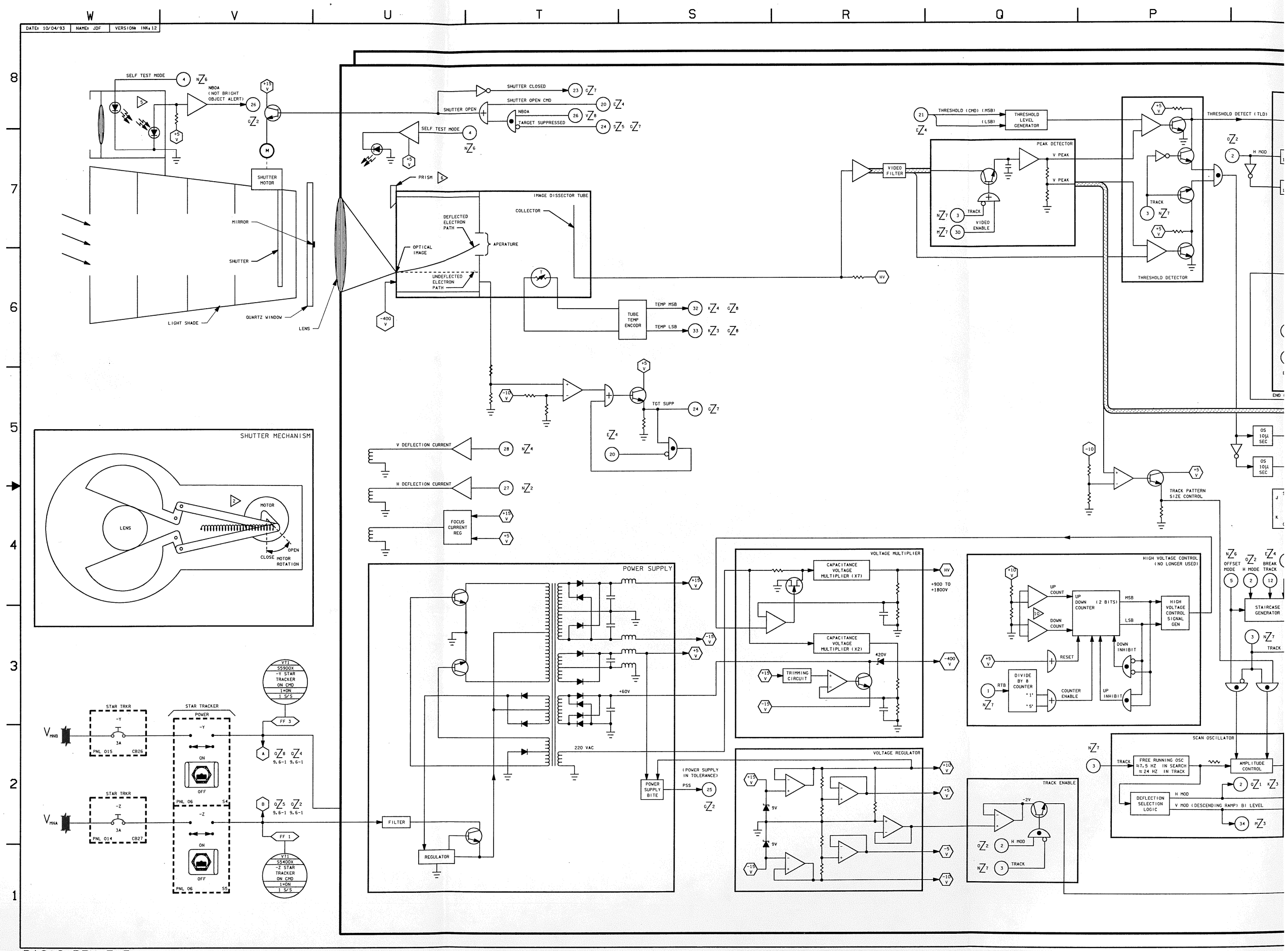

DATE: 10/04/93
NAME: JDF
VERSION: INK:12
SELF TEST MODE
NBOA (NOT BRIGHT OBJECT ALERT)
SHUTTER MOTOR
MIRROR
SHUTTER
LIGHT SHADE
QUARTZ WINDOW
LENS
SHUTTER CLOSED
SHUTTER OPEN CMD
SHUTTER OPEN
TARGET SUPPRESSED
PRISM
IMAGE DISSECTOR TUBE
COLLECTOR
DEFLECTED ELECTRON PATH
APERATURE
OPTICAL IMAGE
UNDEFLECTED ELECTRON PATH
TUBE TEMP ENCODR
TEMP MSB
TEMP LSB
TGT SUPP
V DEFLECTION CURRENT
H DEFLECTION CURRENT
FOCUS CURRENT REG
THRESHOLD (CMD) (MSB)
(LSB)
THRESHOLD LEVEL GENERATOR
VIDEO FILTER
PEAK DETECTOR
V PEAK
TRACK
VIDEO ENABLE
THRESHOLD DETECT (TLD)
H MOD
THRESHOLD DETECTOR
TRACK PATTERN SIZE CONTROL
SHUTTER MECHANISM
MOTOR
LENS
CLOSE
OPEN
MOTOR ROTATION
POWER SUPPLY
220 VAC
+60V
FILTER
REGULATOR
POWER SUPPLY BITE
(POWER SUPPLY IN TOLERANCE)
PSS
VOLTAGE MULTIPLIER
CAPACITANCE VOLTAGE MULTIPLIER (X7)
CAPACITANCE VOLTAGE MULTIPLIER (X2)
TRIMMING CIRCUIT
+900 TO +1800V
VOLTAGE REGULATOR
HIGH VOLTAGE CONTROL (NO LONGER USED)
UP COUNT
DOWN COUNT
UP DOWN COUNTER (2 BITS)
MSB
LSB
HIGH VOLTAGE CONTROL SIGNAL GEN
DOWN INHIBIT
RESET
DIVIDE BY 8 COUNTER
COUNTER ENABLE
UP INHIBIT
RTB
STAIRCASE GENERATOR
OFFSET MODE
H MODE
BREAK TRACK
TRACK
SCAN OSCILLATOR
FREE RUNNING OSC ≈7.5 HZ IN SEARCH ≈24 HZ IN TRACK
AMPLITUDE CONTROL
DEFLECTION SELECTION LOGIC
H MOD
V MOD (DESCENDING RAMP) BI LEVEL
TRACK ENABLE
STAR TRKR
STAR TRACKER
POWER
ON
OFF
FF 3
FF 1
V71 S5900X -Y STAR TRACKER ON CMD 1=ON 1 S/S
V71 S5400X -Z STAR TRACKER ON CMD 1=ON 1 S/S

BASIC REV E-3

DATE: 09/07/93	NAME: VSH	VERSION INK: 1
DATE: 09/28/93	NAME: VSH	VERSION INK: 2

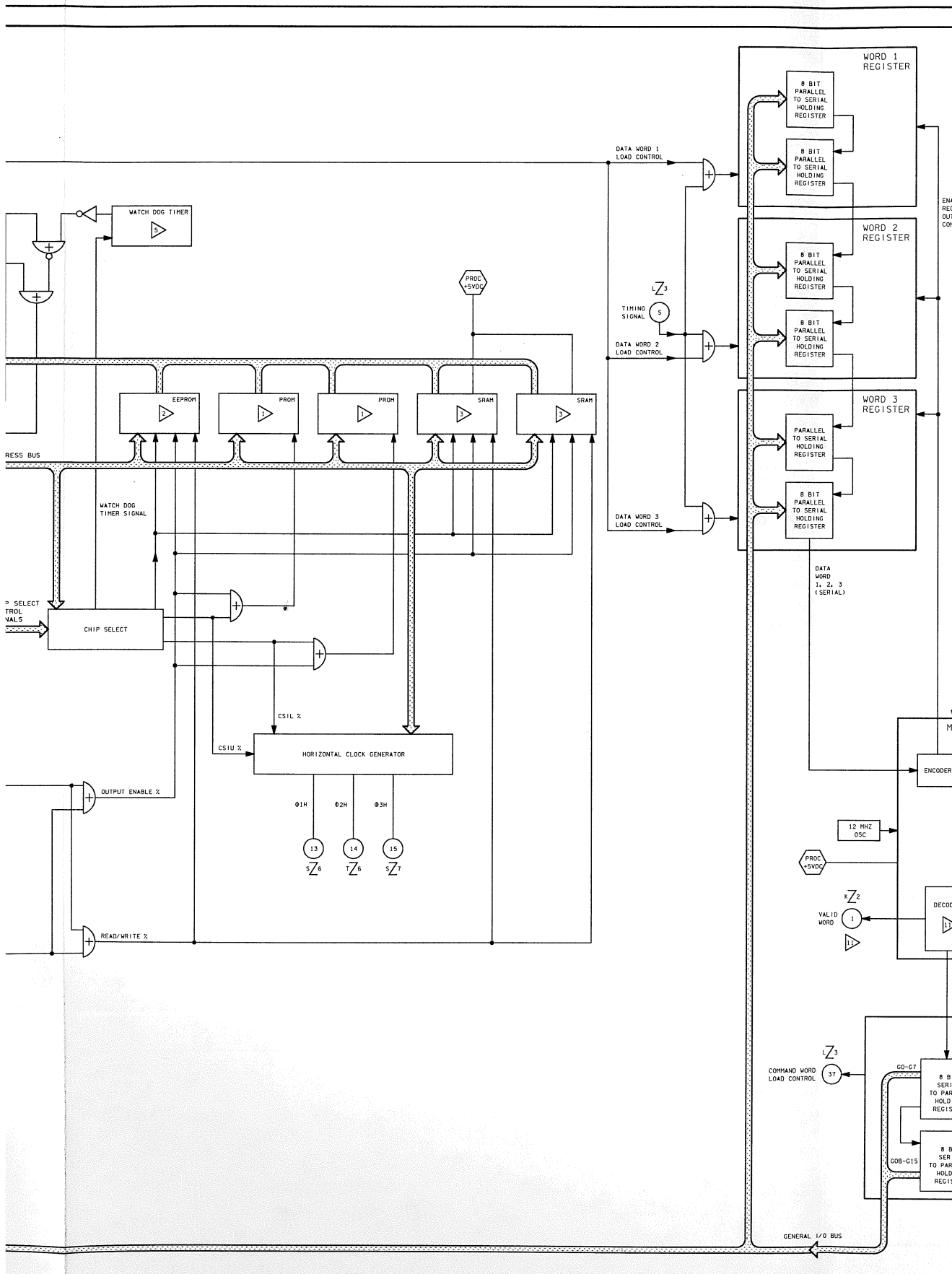

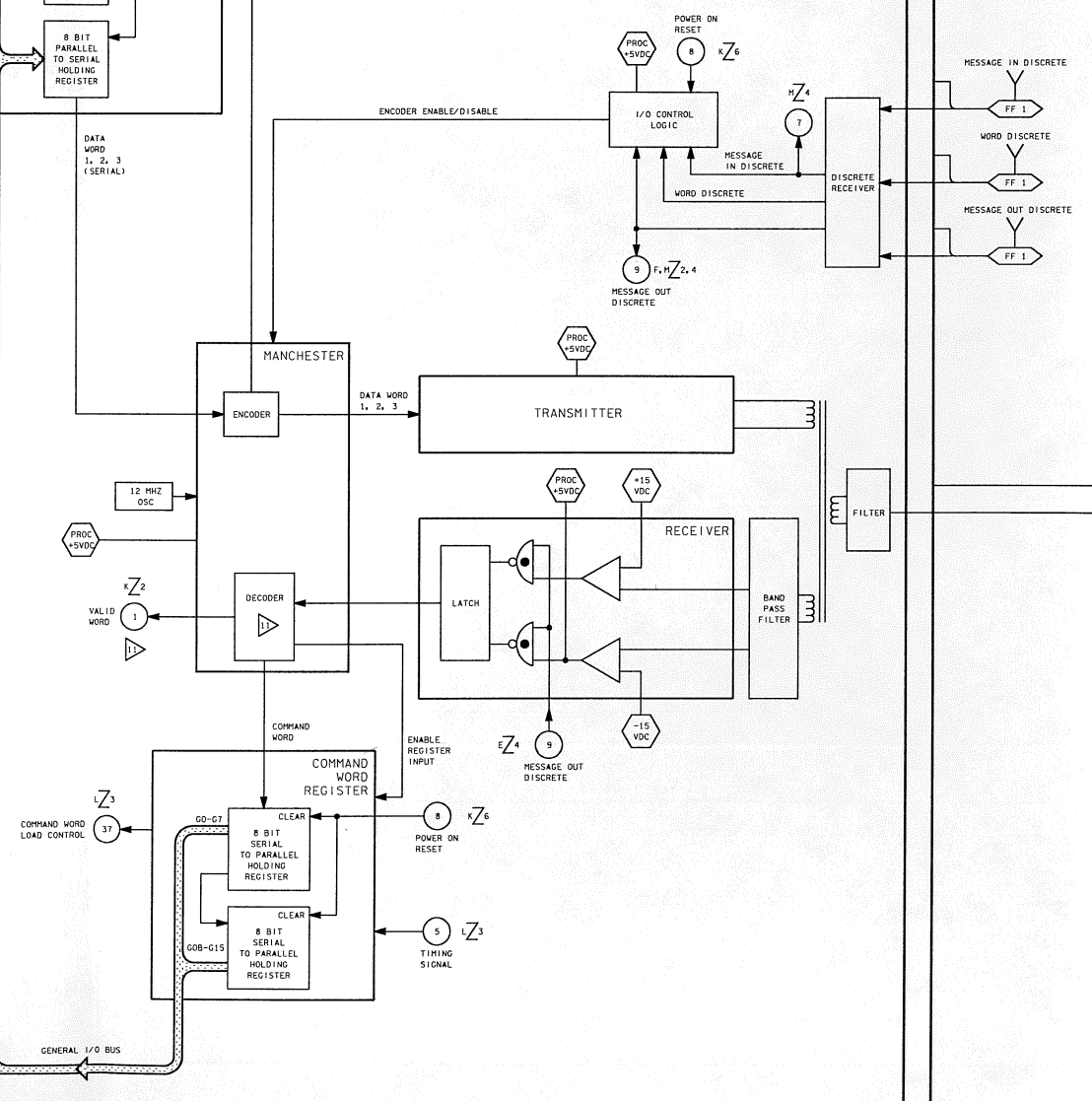

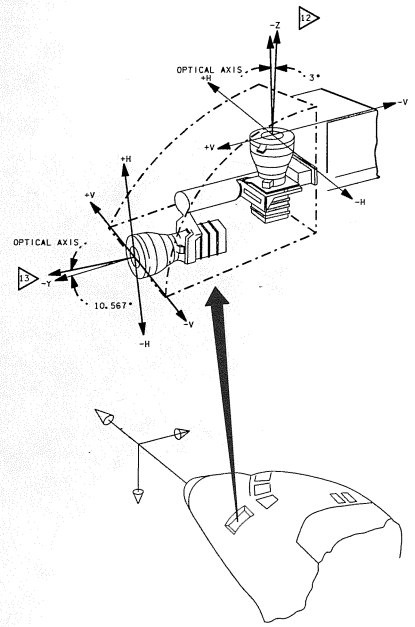

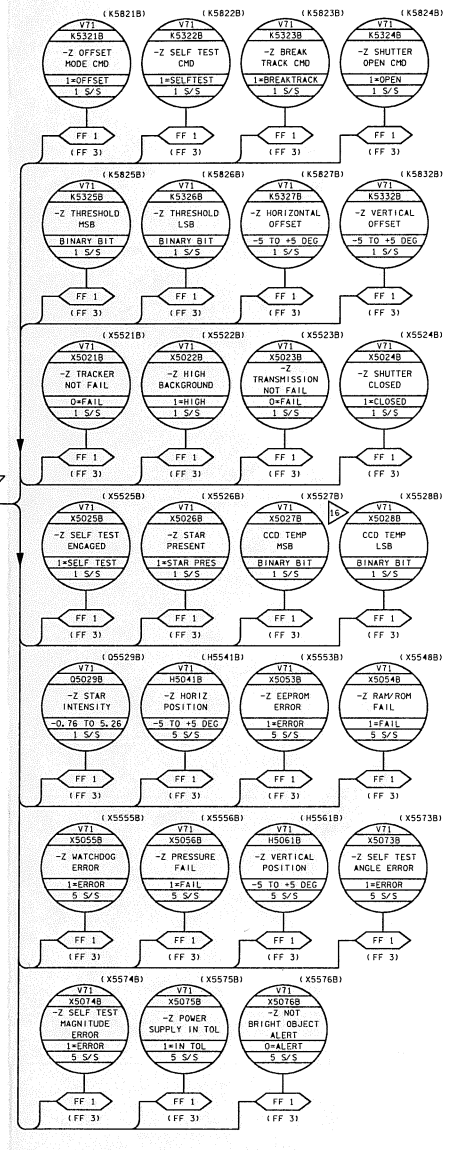

16 ANY FAILURE IN THE THERMOELECTRIC COOLER (TEC) WHICH DISRUPTS IT COOLING CAPABILITY, WOULD BE DETECTED BY THE CCD TEMPERATURE SENSORS WHICH WILL SET THE APPROPRIATE DATA BITS AS FOLLOWS:

ZONES	TEMP RANGE	MSB	LSB
0	<3° C	0	0
1	3 TO 11° C	0	1
2	11 TO 23° C	1	0
3	>23° C	1	1

15 REMOVAL OF MOTOR POWER ALLOWS SPRING TO CLOSE SHUTTER

14 THE PRISM ATTACHED TO THE TUBE FACE PLATE REFLECTS THE ARTIFICAL STAR TO THE LENS WHICH COLLIMATES THE LIGHT. THE LIGHT IS THEN REFLECTED FROM THE WINDOW AND MIRROR BACK THROUGH THE LENS

13 OPTICAL AXIS OF Y STAR TRACKER IS IN THE X-Y PLANE 10.567° FROM THE -Y AXIS TOWARD THE +X AXIS

12 OPTICAL AXIS OF -Z STAR TRACKER IS INCLINED 3° FROM THE -Z AXIS TOWARD A LINE IN THE X-Y PLANE WHICH IS 41° FROM THE +X AXIS TOWARD THE -Y AXIS

11 THE MANCHESTER DECODER CHECKS THE COMMAND WORD FOR A BIT COUNT ERROR, PARITY ERROR OR MANCHESTER ERROR. AN ERROR WILL BE ANNUNCIATED VIA THE "VALID WORD" BIT IF ONE OF THESE ERRORS IS DETECTED, WHICH ONE OF THE THREE ERRORS WAS FOUND CAN NOT BE DIFFERENTIATED

10 THE MICROPROCESSOR WILL ANNUNCIATE A STAR TRACKER FAIL BITE IF THE CCD TEMPERATURE EXCEEDS 23 DEGREES CELSIUS, THE TRACKER WILL CONTINUE TO OPERATE

9 THE THERMAL ELECTRONIC COOLER (TEC) MAINTAINS THE TEMPERATURE OF THE CCD AT 20 DEGREES CELSIUS

8 HIGH BACKGROUND PROTECTION PROVIDES TWO LEVELS OF PROTECTION

LEVEL 1: SET WHEN MICROPROCESSOR RECOGNIZES A MEASURED MAGNITUDE BRIGHTER THAN 2.00 (120 COUNTS). THE MICROPROCESSOR SETS THE HORIZONTAL AND VERTICAL POSITION TO ZERO. THE STAR PRESENT DISCRETE IS INHIBITED. THE SHUTTER REMAINS OPEN. NOTE: THE SHUTTER CAN BE COMMANDED OPEN AND THE TRACKER WILL TRACK STARS BUT THE ACCURACY MAY BE OUTSIDE OF THE 60 ARC SEC SPECIFICATION

LEVEL 2: WHEN MICROPROCESSOR RECOGNIZES A MAGNITUDE BRIGHTER THAN -0.765 (255 COUNTS), IT ISSUES A TARGET SUPPRESS (TS) SIGNAL WHICH CLOSES THE STAR TRACKER SHUTTER. NOTE: THE TS SIGNAL DOES NOT LATCH BUT THE SHUTTER WILL REMAIN CLOSED UNTIL A STAR IS EXPECTED IN THE FOV

7 THE CHARGED COUPLE DEVICE (CCD) CONTAINS THE 512 X 512 PIXEL SILICON CHIP (APPROXIMATELY 1 CM² IN SIZE) USED TO SENSE STAR LIGHT

6 THE POWER ON RESET ENSURES THAT THE MICROPROCESSOR IS INITIALIZED IN THE PROPER STATE WHEN POWER IS APPLIED

5 THE WATCHDOG TIMER REBOOTS THE MICROPROCESSOR IF THE MICROPROCESSOR FAILS TO CLEAR THE WATCHDOG TIMER COUNTER EVERY 270 MS. THE WATCHDOG TIMER'S FUNCTION IS TO RESET THE MICROPROCESSOR IN THE EVENT IT BECOMES STUCK IN AN INFINITE LOOP

4 EACH MUX CARD SWITCH POSITION IS MUTUALLY EXCLUSIVE AND IS UNDER THE CONTROL OF THE MICROPROCESSOR. THE POSITION OF THE MUX CARD SWITCH DETERMINES WHICH PARAMETER WILL BE SAMPLED BY THE MICROPROCESSOR

3 RANDOM ACCESS MEMORY (RAM) IS USED FOR TEMPORARY MEMORY STORAGE. THE CONTENTS OF RAM ARE LOST WHEN THE TRACKER LOSES POWER

2 ELECTRICALLY ERASABLE PROGRAMMABLE READ ONLY MEMORY (EEPROM) STORES TRACKER CALIBRATION COEFFICIENTS IN FOUR REDUNDANT LOCATIONS. MICROPROCESSOR USES CYCLIC REDUNDANCY TO VERIFY INTEGRITY OF MEMORY LOCATIONS

NOTES: 1 PROGRAMMABLE READ ONLY MEMORY (PROM) STORES THE MICROPROCESSOR OPERATING CODE

6 SSST 3

SIGNATURE		DATE	NATIONAL AERONAUTICS AND SPACE ADMINISTRATION LYNDON B. JOHNSON SPACE CENTER HOUSTON, TEXAS	
DSGN	S. DAWSON	8/23/93		
DR	M. URDIALES	8/24/93	SOLID STATE STAR TRACKER (SSST)	
ENGR	L. STALLARD			
ENGR	[signature]	9/21/93		
APP	[signature]	10/5/93		
APP	[signature]	10/7/93	SPACE SHUTTLE	DWG NO 9.6
CADS	S.K. Kimbrell	10-8-93	ALL	
LTR E	PCN 3		126.5 X 34	PAGE SHEET 3 OF 3

BASIC REV E-3

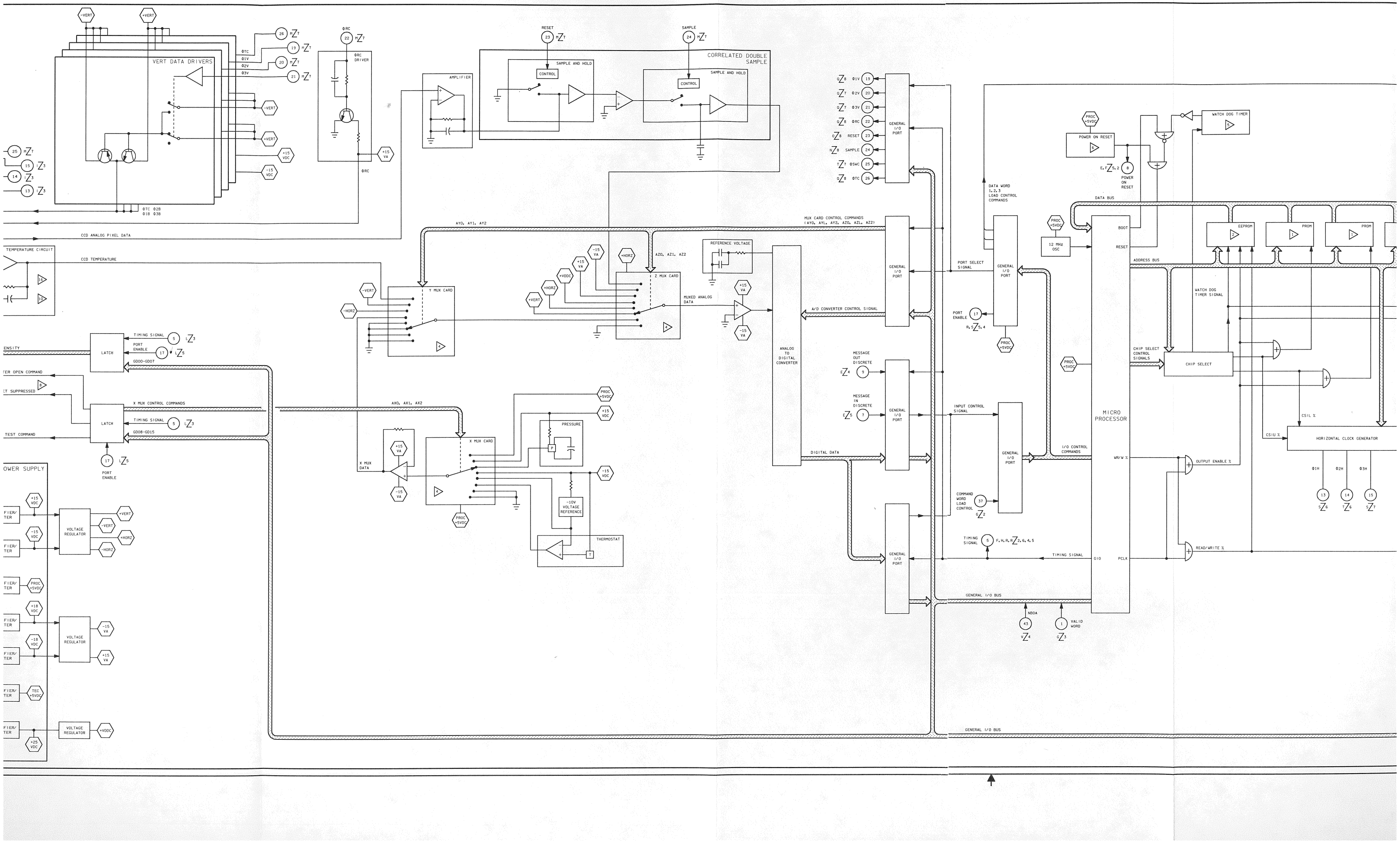
VERT DATA DRIVERS
ΦTC Φ1V Φ2V Φ3V
ΦTC Φ2B
Φ1B Φ3B
ΦRC DRIVER
ΦRC
AMPLIFIER
RESET
SAMPLE
CORRELATED DOUBLE SAMPLE
SAMPLE AND HOLD
CONTROL
CCD ANALOG PIXEL DATA
TEMPERATURE CIRCUIT
CCD TEMPERATURE
AY0, AY1, AY2
AZ0, AZ1, AZ2
Y MUX CARD
Z MUX CARD
REFERENCE VOLTAGE
MUXED ANALOG DATA
ANALOG TO DIGITAL CONVERTER
A/D CONVERTER CONTROL SIGNAL
DIGITAL DATA
MUX CARD CONTROL COMMANDS (AY0, AY1, AY2, AZ0, AZ1, AZ2)
GENERAL I/O PORT
MESSAGE OUT DISCRETE
MESSAGE IN DISCRETE
PORT SELECT SIGNAL
PORT ENABLE
DATA WORD 1, 2, 3 LOAD CONTROL COMMANDS
INPUT CONTROL SIGNAL
I/O CONTROL COMMANDS
COMMAND WORD LOAD CONTROL
TIMING SIGNAL
GENERAL I/O BUS
NBOA
VALID WORD
MICRO PROCESSOR
BOOT
RESET
DATA BUS
ADDRESS BUS
EEPROM
PROM
PROM
WATCH DOG TIMER
POWER ON RESET
12 MHz OSC
WATCH DOG TIMER SIGNAL
CHIP SELECT CONTROL SIGNALS
CHIP SELECT
CSIL %
CSIU %
HORIZONTAL CLOCK GENERATOR
Φ1H
Φ2H
Φ3H
WR/W %
OUTPUT ENABLE %
READ/WRITE %
GIO
PCLK
LATCH
X MUX CONTROL COMMANDS
GD08-GD15
X MUX DATA
X MUX CARD
PRESSURE
-10V VOLTAGE REFERENCE
THERMOSTAT
VOLTAGE REGULATOR
POWER SUPPLY

DATE: 09/28/93 | NAME: VSH | VERSION: INK# 2

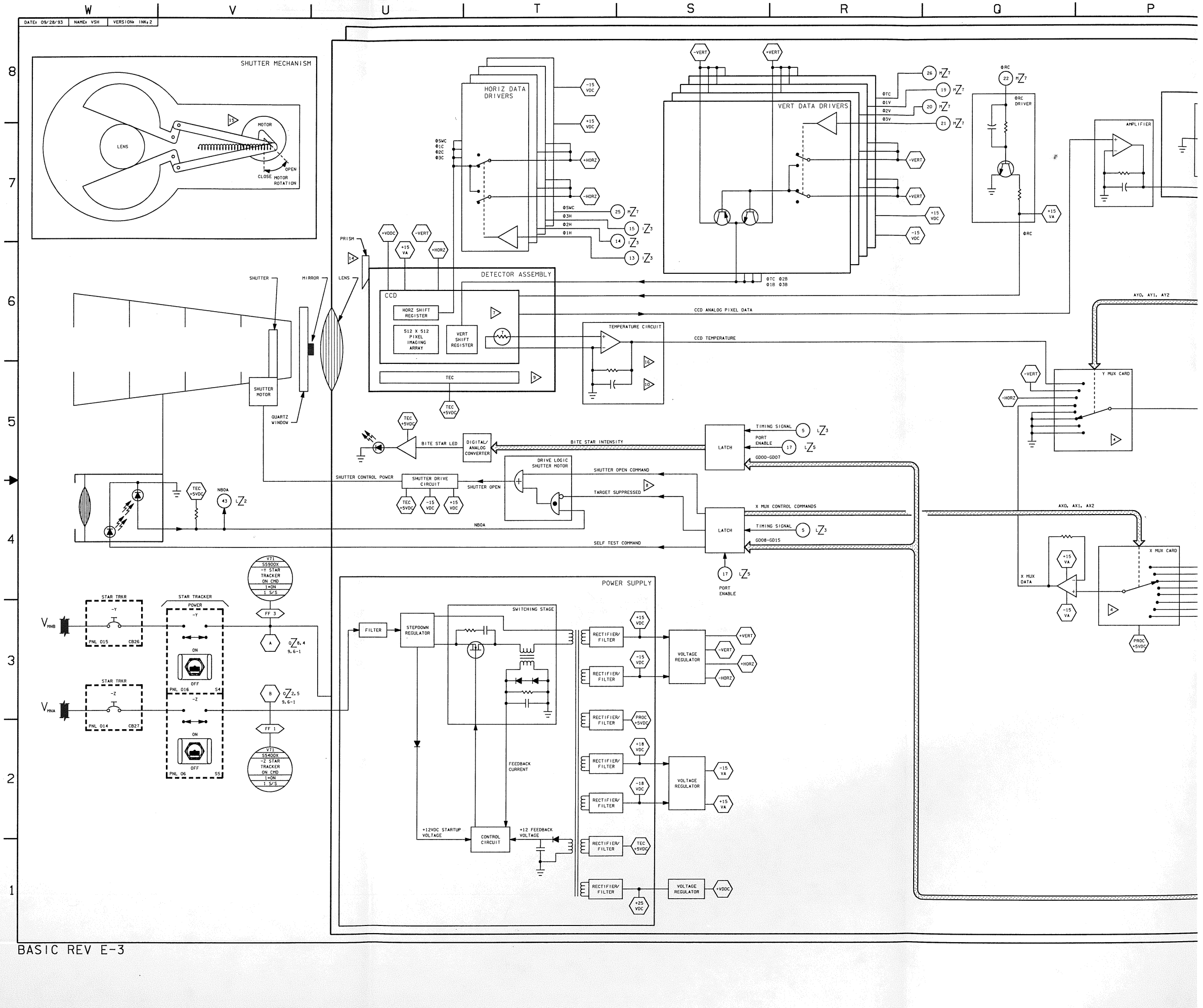

BASIC REV E-3

DATE: 08/05/94	NAME: JMB	VERSION: BPT.2
DATE: 08/10/94	NAME: MAG	VERSION: INK.1
DATE: 08/30/94	NAME: MDU	VERSION: INK.2

IMU 3
IMU 2
IMU 1

PLATFORM ELECTRONICS NO. 1

STARTUP SEQUENCER (CAGE, START, GYROS, CLOSE GIMBAL GYRO LOOPS, ISSUE IN OPERATE)
- CAGE OR AND P
- CAGE IN AND A2
- START GYROS
- SWITCH GYROS TO RUN
- IN OPERATE

CURRENT MONITOR (OUT OF TOLERANCE) → 125 MSEC DELAY
19.2 KHZ
GIMBAL LOOP FL

PLATFORM ELECTRONICS NO. 2

IN OPERATE

3 CHANNEL TEMPERATURE CONTROL AMP
- PLATFORM TEMP SAFE
- <156.5 ±3°F
- >146.5 ±3°F
- >150 ±3°F
- PLATFORM TEMP READY
- VERTICAL GYRO TEMP
- AZIMUTH GYRO TEMP
- AZIMUTH TCA
- VERTICAL TCA
- GIMBAL TCA
- GIMBAL TEMP
- 28 VDC
- PULSE WIDTH MODULATOR

19.2 KHZ INNER ROLL DEMOD
- COARSE
- FINE

DIGITAL I/O

INPUT SYSTEM STATUS AND BITE DISCRETES → INPUT SYSTEM DISCRETE REGISTER

OUTPUT SYSTEM DISCRETE REGISTER
- PITCH Δ SWITCH
- GYRO SLEW ±X,Y,Z
- GYPTO ±X,Y,Z
- BITE SUM FAIL

WATCHDOG TIMER
WATCHDOG TIMER OVERFLOW

I/O BITE DETECTION
I/O FAIL

INTERRUPT CONTROL

16 BIT ACCUMULATOR (+X, -X, +Y, -Y, +Z, -Z)
READ AND RESET
200 HZ

MUX
- MSG OUT
- MSG IN
- WORD

MICRO CONTROLLER

MANCHESTER TO PARALLEL CONVERTER
COMPARITOR (TRANSMIT ONLY)
PARALLEL TO MANCHESTER SERIAL CONVERTER
RCV
XMIT

END AROUND COMPARE FL

5 VDC
TEMP READY
TEMP SAFE

TRANSMISSION WORD 1 FAIL
TRANSMISSION WORD 2 FAIL
PARITY, GAP, MANCHESTER ERROR DETECTION
COMM GOOD

MUX FAIL
- MUX STARTUP TEST FL
- DMA PARALLEL TEST FL
- DMA GRANT TEST FL
- DMA REQUEST FL

MUX BITE

WATCHDOG TIMER OVERFLOW
BITE SUM FAIL
HAINS GOOD
CIRCUIT CARD OVERTEMP
MUX CARD OVERTEMP DETECTION

MEMORY CARD
- PROM OPERATIONAL FLIGHT PROGRAM CODE
- DYNAMIC RAM WORKING STORAGE
- EE PROM EE NOR RELATED DATA FOR POST FLIGHT ANALYSIS

A/D CONVERTER

DC A/D
AC A/D
A/D MICRO-PROCESSOR
MAIN CPU BUS
COMPOSITE GIMBAL ANGLES
1X/8X DELTA > .7°
RESOLVER MISSING (6)
- AZ 8X
- AZ 1X
- PIT 8X
- PIT 1X
- OR 8X
- OR 1X

A/D PROM FL
- DC OFFSET FL
- AC OFFSET FL
- DC GAIN FL
- AC GAIN FL
- A/D RAM FL

CPU CARD

MAIN CPU
- DC/DC FL
- MUX FL
- RESOLVER FL
- CIRCUIT CARD OVERTEMP
- DISC PWR SUP FL
- PLATFORM FL
- A/D FL
- DGTL SBSY FL

→ BITE SUM FAIL

- PULSE ACCUM FL (PWR ON)
- RAM PATTERN FL (PWR ON)
- MEM ERR CORR SELF TEST (PWR ON)
- DOR WRAP AROUND FL
- MTU TAG TIMER FL
- MULTIPLE BIT ERROR
- CPU INST SET TEST FL
- DIVIDE BY ZERO
- FLOATING POINT OVERFLOW
- SQ ROOT OF NEG NUMBER
- PROM CHECK SUM FL
- EE PROM CHECK SUM FL (PWR ON)

→ DGTL SBSY FL

- DC CHANNEL FL
- AC CHANNEL FL
- A/D CONVETER INT FL
- GIMBAL ANG CHECK SUM FL

→ A/D FL

- DAL VOLTAGE FL
- PULSE ACCUM OVERFLOW
- 1X/8X DELTA > .7°
- IR > ±1° XCPT IN GIMBAL FLIP
- SEQUENCER TEST FL (PWR ON)
- GWS FL
- GIMBAL LOOP FL

→ PLATFORM FL

CARD OVERTEMP DETECT

NAVIGATION BASE
IMU 2 IMU 3
11°
$-X_B$

MESSAGE IN DISCRETE
MESSAGE OUT DISCRETE
WORD DISCRETE
FF 1 (FF2) (FF3)

V71 X20218 IMU 1 HAINS GOOD 1=GOOD 1 S/S C (X3021B) (X4021B)	V71 X20228 IMU 1 MUX FAIL 1=FAIL 1 S/S C (X3022B) (X4022B)	V71 X20238 IMU 1 A/D FAIL 1=FAIL 1 S/S C (X3023B) (X4023B)	V71 X20248 IMU 1 PLATFORM FAIL 1=FAIL 1 S/S C (X3024B) (X4024B)	V71 X20258 IMU 1 DGTL SBSY FAIL 1=FAIL 1 S/S C (X3025B) (X4025B)	V71 X20268 IMU 1 DC/DC CARD FAIL 1=FAIL 1 S/S C (X3026B) (X4026B)
V71 X20278 IMU 1 DSCRT PWR SUP FAIL 1=FAIL 1 S/S C (X3027B) (X4027B)	V71 X20288 IMU 1 RSVLR FAIL 1=FAIL 1 S/S C (X3028B) (X4028B)	V71 X20298 IMU 1 CRCT CARD OVERTEMP 1=OVERTEMP 1 S/S C (X3029B) (X4029B)	V71 X20308 IMU 1 TRANS WD 1 FAIL 1=FAIL 1 S/S C (X3030B) (X4030B)	V71 X20318 IMU 1 TRANS WD 2 FAIL 1=FAIL 1 S/S C (X3031B) (X4031B)	V71 X20328 IMU 1 D1/D8 SEQ 1=HIGH 1 S/S C (X3032B) (X4032B)
V71 X20338 IMU 1 D2 SEQ 1=CAGE 1 S/S C (X3033B) (X4033B)	V71 X20348 IMU 1 D3 SEQ 1=OFF 1 S/S C (X3034B) (X4034B)	V71 X20358 IMU 1 D4 SEQ 1=CAGE 1 S/S C (X3035B) (X4035B)	V71 X20368 IMU 1 D5 SEQ 1=LOW 1 S/S C (X3036B) (X4036B)	R20408 IMU 1 OMEGA R -120 TO +120°/HR 1 S/S C (R3040B) (R4040B)	H20608 IMU 1 INNER ROLL/R BX 348.5 TO 11.5 S S/S C (H3060B) (H4060B)
V71 H20808 IMU 1 OUTER ROLL/X 1X 0 TO 360 DEG S S/S C (H3080B) (H4080B)	V71 H21008 IMU 1 OUTER ROLL/X 8X 0 TO 45 DEG S S/S C (H3100B) (H4100B)	V71 H21208 IMU 1 PITCH/Y 1X 0 TO 360 DEG S S/S C (H3120B) (H4120B)	V71 H21408 IMU 1 PITCH/Y 8X 0 TO 45 DEG S S/S C (H3140B) (H4140B)	V71 H21608 IMU 1 AZIMUTH/Z 1X 0 TO 360 DEG S S/S C (H3160B) (H4160B)	V71 H21808 IMU 1 AZIMUTH/Z 8X 0 TO 45 DEG S S/S C (H3180B) (H4180B)
V71 L22008 IMU 1 ACCUM VX FT/SEC S S/S C (L3200B) (L4200B)	V71 L22208 IMU 1 ACCUM VY FT/SEC S S/S C (L3220B) (L4220B)	V71 L22408 IMU 1 ACCUM VZ FT/SEC S S/S C (L3240B) (L4240B)	V71 H2260P IMU 1 ECHO 1 OCTAL 1 S/S C (H3260P) (H4260P)	V71 H2280P IMU 1 ECHO 2 OCTAL 1 S/S C (H3280P) (H4280P)	V71 K25478 IMU 1 SLEW Z NEG 1=NEGATIVE 1 S/S C (K3547B) (K4547B)
V71 K25218 IMU 1 TORQUE X +0.0 TO +7.5ARCSEC 1 S/S C (K3521B) (K4521B)	V71 K25268 IMU 1 TORQUE Y +0.0 TO +7.5ARCSEC 1 S/S C (K3526B) (K4526B)	V71 K25318 IMU 1 TORQUE Z +0.0 TO +7.5ARCSEC 1 S/S C (K3531B) (K4531B)	V71 K25418 IMU 1 ACCEL SCALE FACTOR 1=HIGH 1 S/S C (K3541B) (K4541B)	V71 K25438 IMU 1 SLEW X NEG 1=NEGATIVE 1 S/S C (K3543B) (K4543B)	V71 K25458 IMU 1 SLEW Y NEG 1=NEGATIVE 1 S/S C (K3545B) (K4545B)
V71 K25428 IMU 1 SLEW X POS 1=POSITIVE 1 S/S C (K3542B) (K4542B)	V71 K25448 IMU 1 SLEW Y POS 1=POSITIVE 1 S/S C (K3544B) (K4544B)	V71 K25468 IMU 1 SLEW Z POS 1=POSITIVE 1 S/S C (K3546B) (K4546B)			
V71 X240** IMU 1 IN OPR MODE 1=OPERATE 1 S/S C (X3403) (X4403)	V71 X2404X IMU 1 PLATFORM TEMP READY 1=READY 1 S/S C (X3404X) (X4404X)	V71 X2405X IMU 1 PLATFORM TEMP SAFE 1=SAFE 1 S/S C (X3405X) (X4405X)			
V71 X2406X IMU 1 TEMP READY ALWAYS 1 1 S/S C (X3406X) (X4406X)	V71 X2407X IMU 1 TEMP SAFE ALWAYS 1 1 S/S C (X3407X) (X4407X)	V71 X2401X IMU 1 COMMUNICATIONS GOOD 1=GOOD 1 S/S C (X3401X) (X4401X)			
V71 K2576X IMU 1 OPER MODE CMD 1=ON 1 S/S C (K3576X) (K4576X)					

(FF 2) (FF 3) FF 1

1. THE REDUNDANT RATE AXIS IS IN THE XY PLANE INCLINED 26.5° FROM THE +X AXIS TOWARD THE +Y AXIS
2. BFS FAILS IF LOGIC 0
3. THE PARENT WORDS FOR THE DISCRETE SIGNALS OF IMU 1 (2,3) ARE V71H2020P (H3020P, H4020P) OPS 9 DOWNLIST AT 5 S/S
4. AS THE PITCH GIMBAL APPROACHES ±90 DEGREES ANY SMALL DEVIATION IN INNER ROLL WILL CAUSE VERY HIGH OUTER ROLL RATES AS THE OUTER ROLL LOOP TRIES TO NULL INNER ROLL. THIS IS A NATURAL GIMBAL FLIP AND PREVENTS THE PITCH GIMBAL FROM EXCEEDING ±90 DEGREES. FOR PURE PITCH MOTION THERE WILL BE NO INNER ROLL SIGNAL TO INITIATE THIS NATURAL GIMBAL FLIP. IF THE PITCH GIMBAL REACHES ±92 DEGREES THE HAINS CPU ISSUES THE PITCH SWITCH DISCRETE CAUSING THE OUTER ROLL LOOP GAIN TO BE GREATLY INCREASED SO THAT ANY SIGNAL, INCLUDING NOISE, WILL GENERATE A GIMBAL FLIP
5. THIS PARAMETER IS DERIVED FROM A LINEAR PICKOFF RATHER THAN AN ACTUAL 8X RESOLVER. FOR GPC TRANSPARENCY THE HAINS CPU FORMATS IT AS AN 8X RESOLVER. ITS DOWNLIST FORMAT IS THE SAME AS THE OTHER 8X RESOLVERS, BUT HARDWARE LIMITS THE RANGE TO 12.5 DEGREES EITHER SIDE OF ZERO. DISPLAY SCALING REMOVES THE FACTOR OF 8 AND PROVIDES A MODULO 360 REPRESENTATION WHERE -1 DEGREE APPEARS AS 359 DEGREES
6. THE DOWNLIST FORMAT FOR THIS PARAMETER IS THE SAME AS THE OTHER 1X RESOLVERS, HARDWARE LIMITS THE RANGE TO 112.5 DEGREES EITHER SIDE OF ZERO DEGREES
7. THE DOWNLIST SCALING OF THESE PARAMETERS IS 0 TO 360 DEGREES. THEY ARE RESCALED TO A RANGE OF 0 TO 45 FOR DISPLAY TO REMOVE THE FACTOR OF 8
8. HAINS TELEMETRY DOES NOT REFLECT ACTUAL HARDWARE 8X AND 1X RESOLVER DATA. THE HAINS CPU (WHICH CREATES THE DOWNLIST) RECEIVES ONLY THE COMPOSITE ANGLE FROM THE A/D CONVERTER. FOR GPC TRANSPARENCY THE HAINS CPU DERIVES, FROM THE COMPOSITE ANGLE, 1X AND 8X ANGLES WHICH DIFFER ONLY IN SCALE AND TRUNCATION UNLESS THE A/D CONVERTER DETECTS A HARDWARE 1X/8X DIFFERENCE OF >0.7 DEGREE IN WHICH CASE THE 1X VALUE IS INCREASED BY 5 DEGREES
9. HAINS VELOCITY CHANNELS HAVE ONLY A SINGLE GAIN OF 0.0075 FT/SEC/PULSE. FOR FLIGHT SOFTWARE TRANSPARENCY THE HAINS CPU SCALES THE OUTPUT TO 0.034 FT/SEC/PULSE FOR LOW GAIN AND 0.00075 FT/SEC/PULSE FOR HIGH GAIN AS REQUESTED BY THE GPC

NOTES: 10. VELOCITY DATA OUTPUT OVERFLOWS BEYOND 2257.6 FOR LOW GAIN AND BEYOND 225.76 FOR HIGH GAIN

7 HAINS 1

SIGNATURE		DATE	NATIONAL AERONAUTICS AND SPACE ADMINISTRATION LYNDON B. JOHNSON SPACE CENTER HOUSTON, TEXAS
DSGN	V. S. HUNTER	6/17/94	
DR			INERTIAL MEASUREMENT UNIT-HAINS
ENGR	C. K. ALFORD		
ENGR	Charles Alford 8/22/94		
APP	Chris J. Hunter 8/22/94		SPACE SHUTTLE
APP	John A. Hammond 8/22/94		ALL
CHG	S.K. Kimbrough 9-7-94		

DWG NO 9.7
LTR E PCN 4
126.5 X 34
PAGE SHEET 1 OF 1

BASIC REV E-4

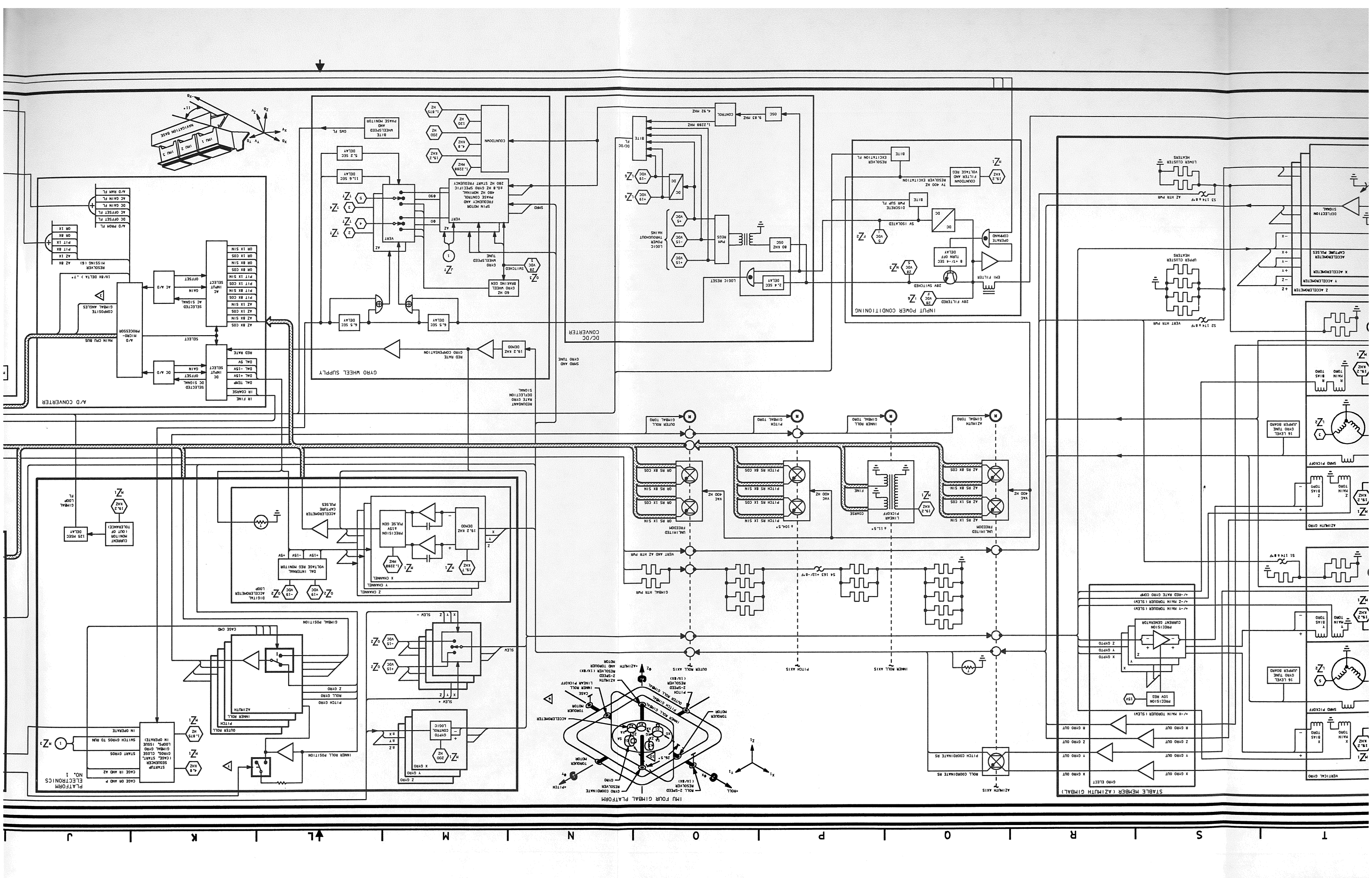
A/D CONVERTER
GYRO WHEEL SUPPLY
DC/DC CONVERTER
INPUT POWER CONDITIONING
IMU FOUR GIMBAL PLATFORM
STABLE MEMBER (AZIMUTH GIMBAL)
PLATFORM ELECTRONICS NO. 1
OUTER ROLL AXIS
PITCH AXIS
INNER ROLL AXIS
AZIMUTH AXIS
NAVIGATION BASE
IMU 1
IMU 2
IMU 3
T
S
R
Q
P
O
N
M
L
K
J

DATE: 08/30/94 | NAME: MDU | VERSION: INRx 2

W V U T S R Q P O N

8 7 6 5 4 3 2 1

IMU POWER

$V_{CNTLCA2}$

$V_{CNTLCA3}$

3 ON OFF

PML Q16 S10

V_{MNA} FPC1

V_{MNC} FPC3

RPC 10A

RPC 10A

FF3 V77 X4257X IMU 3 POWER ON CMD B 1=ON 1 S/S

GF3 V76 X4256E PCA IMU NO. 3 RPC C ON 1=ON 1 S/S

GF1 V76 X4253E PCA IMU NO. 3 RPC A ON 1=ON 1 S/S

OF3 V76 X4254E PCA IMU NO. 2 RPC C ON 1=ON 1 S/S

IMU POWER

$V_{CNTLBC1}$

$V_{CNTLBC2}$

2 ON OFF

PML 015 S10

V_{MNC} FPC3

V_{MNB} FPC2

RPC 10A

RPC 10A

FF2 V77 X3575X IMU 2 POWER ON, CMD B 1=ON 1 S/S

OF2 V76 X4253E PCA IMU NO. 2 RPC B ON 1=ON 1 S/S

FF1 V77 X3575X IMU 1 POWER ON CMD B 1=ON 1 S/S

OF1 V76 X4250E PCA IMU NO. 1 RPC A ON 1=ON 1 S/S

IMU POWER

$V_{CNTLAB1}$

$V_{CNTLAB2}$

1 ON OFF

PML 014 S11

V_{MNA} FPC1

V_{MNB} FPC2

RPC 10A

RPC 10A

OF2 V76 X4251E PCA IMU NO. 1 RPC B ON 1=ON 1 S/S

STABLE MEMBER (AZIMUTH GIMBAL)

VERTICAL GYRO

X PICK OFF

19.2 KHZ

X MAIN TORQ

X BIAS TORQ

SMRD PICKOFF

16 LEVEL GYRO TUNE JUMPER BOARD

Y PICK OFF

Y MAIN TORQ

Y BIAS TORQ

S1 174 ± 8°F

AZIMUTH GYRO

Z PICK OFF

Z MAIN TORQ

Z BIAS TORQ

SMRD PICKOFF

16 LEVEL GYRO TUNE JUMPER BOARD

R PICK OFF

R MAIN TORQ

R BIAS TORQ

GYRO ELECT

X GYRO OUT

Y GYRO OUT

Z GYRO OUT

R GYRO OUT

+/-X MAIN TORQUER (SLEW)

PRECISION 10V REG

15V

PRECISION CURRENT GENERATOR

X GYPTO

Y GYPTO

Z GYPTO

+/-Y MAIN TORQUER (SLEW)

+/-Z MAIN TORQUER (SLEW)

+/-RED RATE GYRO COMP

X GYRO OUT

Y GYRO OUT

Z GYRO OUT

R GYRO OUT

Z ACCELEROMETER

Y ACCELEROMETER

X ACCELEROMETER

ACCELEROMETER CAPTURE PULSES

+Z −Z +Y −Y +X −X

19.2 KHZ

DEFLECTION SIGNAL

S2 174 ± 8°F VERT HTR PWR

UPPER CLUSTER HEATERS

S3 174 ± 8°F AZ HTR PWR

LOWER CLUSTER HEATERS

AZIMUTH AXIS

ROLL COORDINATE RS

PITCH COORDINATE RS

AZIMUTH GIMBAL TORQ

IMU FOUR GIMBAL PLATFORM

+ROLL

ROLL 2-SPEED RESOLVER (1X/8X)

GYRO COORDINATE RESOLVER

GYRO

+PITCH

TORQUER MOTOR

26.5°

ACCELEROMETER

TORQUER MOTOR

INNER ROLL GIMBAL

PITCH GIMBAL

OUTER ROLL GIMBAL

TORQUER MOTOR

CASE

INNER ROLL LINEAR PICKOFF

PITCH 2-SPEED RESOLVER (1X/8X)

AZIMUTH 2-SPEED RESOLVER (1X/8X) AND TORQUER MOTOR

+AZIMUTH

INNER ROLL AXIS

PITCH AXIS

OUTER ROLL AXIS

GIMBAL HTR PWR

S4 163 +12/-8°F

VERT AND AZ HTR PWR

UNLIMITED FREEDOM

AZ RS 1X SIN

AZ RS 1X COS

AZ RS 8X SIN

AZ RS 8X COS

VAC 400 HZ

19.2 KHZ

LINEAR PICKOFF

± 11.5°

COARSE

FINE

± 104.5°

PITCH RS 1X SIN

PITCH RS 1X COS

PITCH RS 8X SIN

PITCH RS 8X COS

OR RS 1X SIN

OR RS 1X COS

OR RS 8X SIN

OR RS 8X COS

INNER ROLL GIMBAL TORQ

PITCH GIMBAL TORQ

OUTER ROLL GIMBAL TORQ

INPUT POWER CONDITIONING

EMI FILTER

28V FILTERED

28 VDC F

28V SWITCHED

28 VDC S

8 +1/-4 SEC TURN OFF DELAY

OPERATE COMMAND

DC DC

5V ISOLATED

5 VDC

DISCRETE PWR SUP FL

BITE

19.2 KHZ

COUNTDOWN FILTER AND VOLTAGE REG

7V 400 HZ RESOLVER EXCITATION

RESOLVER EXCITATION FL

BITE

DC/DC CONVERTER

2.4 SEC DELAY

LOGIC RESET

80 KHZ OSC

PWM REGS

+15 VDC

-15 VDC

+5 VDC

LOGIC POWER THROUGHOUT HAINS

DC DC

+15 VDC

-15 VDC

DC/DC FL

BITE

OSC 9.83 MHZ

CONTROL

1.2288 MHZ

4.92 MHZ

SMRD AND GYRO TUNE

SMRD

REDUNDAN RATE GYR DEFLECTI SIGNAL

28 VDC S SWIT

BASIC REV E-4

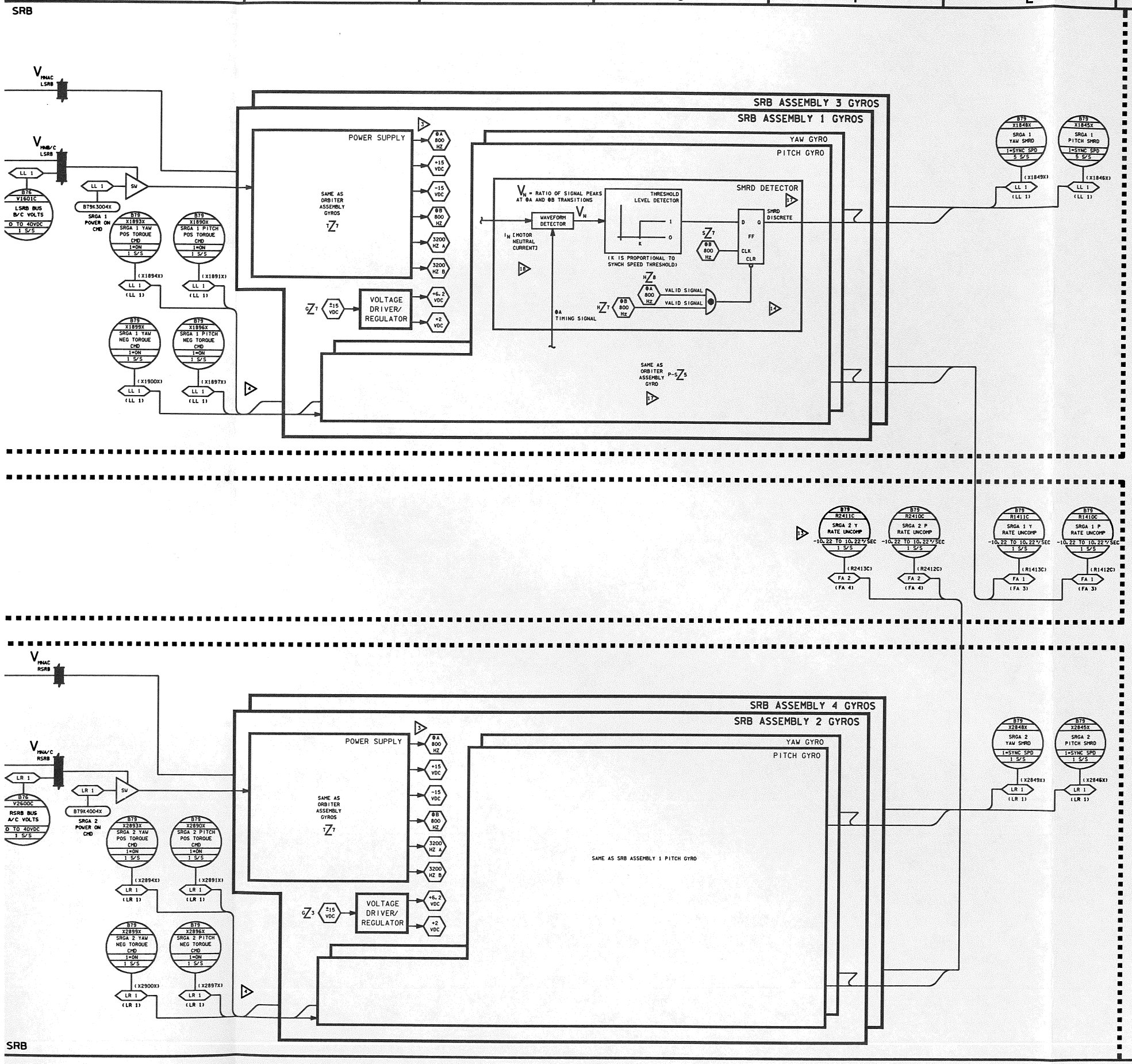

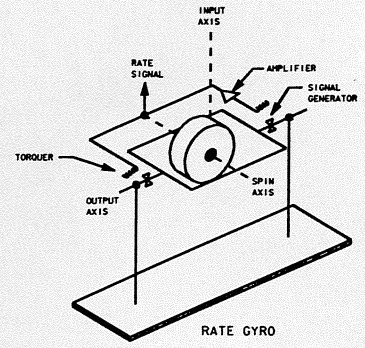

RATE GYRO

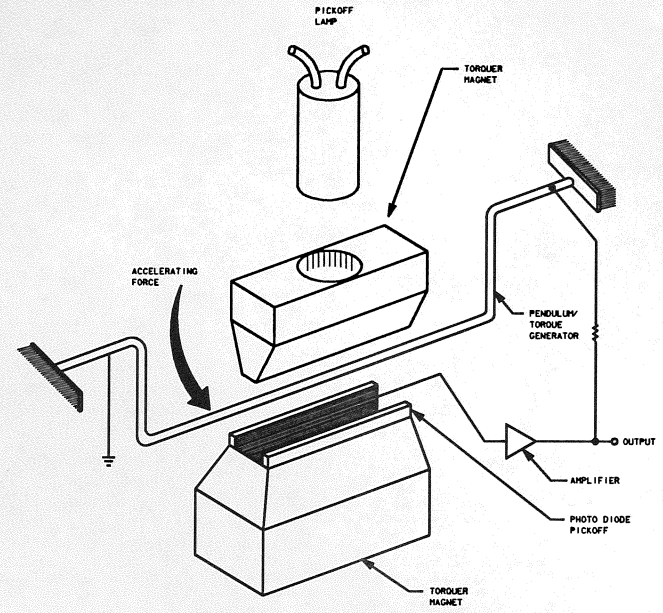

ACCELEROMETER

(1) AA LOCATIONS (ORBITER COORDINATES):

	X	Y	Z
AA 1	382.8	-6.8	398.2
AA 2	381.7	5.6	406.4
AA 3	381.7	11.6	406.4
AA 4	382.8	-12.8	398.2

(2) ORBITER RGA LOCATIONS (ORBITER COORDINATES):

	X	Y	Z
RGA 1	1304.5	15.0	295.25
RGA 2	1304.5	21.0	295.25
RGA 3	1304.5	-21.0	295.25
RGA 4	1304.5	-15.0	295.25

(3) THE SPIN MOTOR RUN DETECTOR (SMRD) CIRCUIT INDICATES THAT THE RATE GYRO IS SPINNING AT ITS SYNCHRONOUS SPEED OF 24000 RPM. THE SMRD CIRCUIT WILL INDICATE AN INVALID SIGNAL AT 98 PERCENT OR 102 PERCENT OF THE SPIN MOTOR SYNCHRONOUS SPEED. FOR POWER LOSS TO THE RATE GYRO MOTOR (THE SMRD CIRCUITRY REMAINS POWERED), THE SMRD SIGNAL IS MAINTAINED FOR APPROXIMATELY 17.6 SECONDS BEFORE BEING SET INVALID

(4) SRB RGA COMPENSATED RATES:

		LIMITS LOW/HIGH
SRGA 1 COMP PITCH RATE	V95R4260C	-10.22/10.22
SRGA 1 COMP YAW RATE	V95R4261C	-10.22/10.22
SRGA 2 COMP PITCH RATE	V95R4262C	-10.22/10.22
SRGA 2 COMP YAW RATE	V95R4263C	-10.22/10.22
SRGA 3 COMP PITCH RATE	V95R4270C	-10.22/10.22
SRGA 3 COMP YAW RATE	V95R4271C	-10.22/10.22
SRGA 4 COMP PITCH RATE	V95R4272C	-10.22/10.22
SRGA 4 COMP YAW RATE	V95R4273C	-10.22/10.22

(5) ORBITER RGA COMPENSATED RATES:

		LIMITS LOW/HIGH
RGA 1 COMP ROLL RATE	V95R4001C	-40.96/40.88
RGA 2 COMP ROLL RATE	V95R4002C	-40.96/40.88
RGA 3 COMP ROLL RATE	V95R4003C	-40.96/40.88
RGA 4 COMP ROLL RATE	V95R4004C	-40.96/40.88
RGA 1 COMP PITCH RATE	V95R4031C	-20.48/20.44
RGA 2 COMP PITCH RATE	V95R4032C	-20.48/20.44
RGA 3 COMP PITCH RATE	V95R4033C	-20.48/20.44
RGA 4 COMP PITCH RATE	V95R4034C	-20.48/20.44
RGA 1 COMP YAW RATE	V95R4061C	-20.48/20.44
RGA 2 COMP YAW RATE	V95R4062C	-20.48/20.44
RGA 3 COMP YAW RATE	V95R4063C	-20.48/20.44
RGA 4 COMP YAW RATE	V95R4064C	-20.48/20.44

(6) BMA COMPENSATED ACCELERATION:

		LIMITS LOW/HIGH
AA 1 LATERAL	V95A4101C	-32.88/32.88
AA 2 LATERAL	V95A4102C	-32.88/32.88
AA 3 LATERAL	V95A4103C	-32.88/32.88
AA 4 LATERAL	V95A4104C	-32.88/32.88
AA 1 NORMAL	V95A4151C	-131.53/131.53
AA 2 NORMAL	V95A4152C	-131.53/131.53
AA 3 NORMAL	V95A4153C	-131.53/131.53
AA 4 NORMAL	V95A4154C	-131.53/131.53

(7) AA WARMUP TIME: 5 MIN

(8) RGA WARMUP TIME: 2 MIN

(9) AA SELF TEST LIMITS: (ZERO SENSED ACCEL)
LATERAL 16.1 ± 1.7 FPS 2
NORMAL 64.4 ± 6.7 FPS 2

(10) RGA SELF TEST LIMITS: (ZERO SENSED RATES)

	HIGH TEST	LOW TEST
ROLL	+20 ± 1.12	-20± 1.12 DEG/SEC
PITCH	+10 ± 0.56	-10± 0.56 DEG/SEC
YAW	+10 ± 0.56	-10± 0.56 DEG/SEC

(11) AA TRACKING TEST TOL (1-LOADS):

	NORMAL TOL	LATERAL TOL
OPS 1,6	0.063 G	0.08 G
OPS 3	0.2 G	0.13 G
IMVS	0.00 G	0.03 G

(12) RGA TRACKING TEST TOL (1-LOADS):

(|SEL RATE|) (LSF) + (CON) DEG/SEC

ORB RGA

ROLL		
OPS 1,6	0.08	0.80
OPS 3	0.089	1.19
PITCH/YAW		
OPS 1,6	0.065	0.55/0.63
OPS 3	0.060	0.65
ROLL		
IMVS		0.595
PITCH/YAW		
IMVS		0.322
SRB RGA		
PITCH/YAW		
OPS 1	0.05	0.45
IMVS		0.325

(A) TRO CMDS TO SRGA 1 AND 2 NOT ON DOWNLIST IN G1

(B) 0A LEADS 0B BY 90°

(C) SMRD DISCRETES DRIVE THE CRT DISPLAY (SPEC 041/OPS 8) STAT COLUMN (SMRD=PWR OFF OR GYRO NOT IN SYNC, BLANK=PWR ON AND GYRO IN SYNC)

NOTES: (A) MOTOR NEUTRAL CURRENT PICKOFF RESISTOR IS PHYSICALLY LOCATED IN POWER SUPPLY. IT IS SHOWN HERE IN THE GYRO FOR SIMPLICITY

(D) SHAPE OF MOTOR NEUTRAL CURRENT WAVEFORM IS PROPORTIONAL TO SYNCHRONOUS MOTOR OPERATION

(E) SRB SMRD DETECTOR LOGIC APPLIES TO KRYTOX RGAs ONLY

8 RGA/BMA

SIGNATURE	DATE	NATIONAL AERONAUTICS AND SPACE ADMINISTRATION LYNDON B. JOHNSON SPACE CENTER HOUSTON, TEXAS
DSGN L. DUMIS	10/26/78	
DR		
ENGR E. LIEBMAN		RATE GYROS/BODY MOUNTED ACCELEROMETERS
ENGR E. Liebman	7/26/96	
APP	7/24/96	
APP	7/24/96	SPACE SHUTTLE
CADS S. K. Eckelkamp	7-29-96	ALL
LTR E PCN 6		126.5 X 34

DUG NO 9.8

PAGE SHEET 1 OF 1

DATE: 08/09/95	NAME: JMB	VERSION: BPT: 10
DATE: 08/14/95	NAME: LAM	VERSION: INK: 11
DATE: 07/25/96	NAME: MDU	VERSION: INK: 12

BASIC REV E-6

ORBITER ASSEMBLY 4 ACCELEROMETERS
ORBITER ASSEMBLY 3 ACCELEROMETERS
ORBITER ASSEMBLY 2 ACCELEROMETERS
ORBITER ASSEMBLY 1 ACCELEROMETERS
POWER SUPPLY
LATERAL ACCELEROMETER
NORMAL ACCELEROMETER
ORBITER ASSEMBLY 4 GYROS
ORBITER ASSEMBLY 3 GYROS
ORBITER ASSEMBLY 2 GYROS
ORBITER ASSEMBLY 1 GYROS
POWER SUPPLY
SHRD DETECTOR
ROLL GYRO
PITCH GYRO
YAW GYRO
RH SRB
ORB
LH SRB

DATE= 07/25/96 | NAME= MDU | VERSION# IN#=12

W V U T S R Q P O N

8 7 6 5 4 3 2 1

ORBITER ASSEMBLY 4 GYROS
ORBITER ASSEMBLY 3 GYROS
ORBITER ASSEMBLY 2 GYROS
ORBITER ASSEMBLY 1 GYROS
YAW GYRO
PITCH GYRO
ROLL GYRO

RGA
RGA 4
RGA 3
RGA 2
RGA 1
ON
OFF
PNL 015A S13
PNL 016A S2
PNL 015A S2
PNL 014A S2
RPC
3A
0A1
0A2
0A3
V79 S1844E RGA 4 PWR CMD C ON 1=ON 1 S/S
V76 X4296E RGA 4 RPC C ON 1=ON 1 S/S
V79 S1835E RGA 3 PWR CMD C ON 1=ON 1 S/S
V79 S1834E RGA 2 PWR CMD B ON 1=ON 1 S/S
V79 S1829E RGA 1 PWR CMD A ON 1=ON 1 S/S
V76 X4293E RGA 1 RPC A ON 1=ON 1 S/S
V76 X4294E RGA 1 RPC B ON 1=ON 1 S/S
1.2K
MM B
MM A
ACCEL 2
ACCEL 1
PNL 015E CB27
PNL 014E CB28
3A
V79 S2007E AA 2 PWR CMD B ON 1=ON 1 S/S
V79 S2004E AA 1 PWR CMD A ON 1=ON 1 S/S
0F4

ACCEL 4
ACCEL 3
PNL 015F S14
PNL 016F S14
OF 2
OF 3
OF1
OF3
V76 X4300E AA 4 RPC B ON 1=ON 1 S/S
V79 S2015E AA 4 PWR CMD C ON 1=ON 1 S/S
V76 X4299E AA 4 RPC C ON 1=ON 1 S/S
V76 X4298E AA 3 RPC A ON 1=ON 1 S/S
V79 S2010E AA 3 PWR CMD C ON 1=ON 1 S/S
V76 X4297E AA 3 RPC A ON 1=ON 1 S/S

POWER SUPPLY
3200 HZ
FREQUENCY DIVIDER (÷ 2)
6400 HZ OSCILLATOR
TO PWR SPLY CKTS A
5VDC 6.2VDC 17VDC
POWER SUPPLY REGULATOR
FILTER
FREQUENCY DIVIDER (÷ 4) AND DRIVER
0A 800 HZ 0°
-180°
0B 800 HZ -90°
-270°
PHASE A DETECTOR AND DRIVER
PHASE B DETECTOR AND DRIVER
+15V REGULATOR
-15V REGULATOR
BUFFER AMP
PHASE SHIFT DRIVER
180° OUT OF PHASE
POWER AMP
MICROSYN SUPPLY
DEMOD REF
0A 800 HZ
0B 800 HZ
3200 HZ A
3200 HZ B
+15 VDC
-15 VDC
±15 VDC
VOLTAGE DRIVER/ REGULATOR
+6.2 VDC
+3 VDC

V79 K1902C RG 1 YAW TRQ CMD -20 TO +20°/SEC 1 S/S (K1907C) (K1912C) (K1917C) FA 1 (FA 2) (FA 3) (FA 4)
V79 K1901C RG 1 PITCH TRQ CMD -20 TO +20°/SEC 1 S/S (K1906C) (K1911C) (K1916C) FA 1 (FA 2) (FA 3) (FA 4)
V79 K1900C RG 1 ROLL TRQ CMD -40 TO +40°/SEC 1 S/S (K1905C) (K1910C) (K1915C) FA 1 (FA 2) (FA 3) (FA 4)

CURRENT AMP
TORQUER
MOTOR
24K RPM
MICROSYN SIGNAL GENERATOR
BITE BUFFER
V > | 50 MV |
AC AMP
PHASE SENSITIVE DEMODULATOR
COMPENSATION AMP
PREFILTER LOW PASS 50 RAD/SEC
DRIVER AMP
BUFFER AMP HIGH
BUFFER AMP LOW

PHASE SENSITIVE DEMODULATOR
LOW PASS FILTER 12 HZ
SMRD DETECTOR
AC AMP
DETECTOR
FILTER
COMPARATOR
BUFFER AMP
INHIBIT CONTROL DELAY ~ 0.1 SEC
+6.2 VDC
+3 VDC
±15 VDC

V79 X1862Z RG 1 YAW SMRD 1=SYNC SPD 1 S/S (X1867X) (X1872X) (X1877X) FA 1 (FA 2) (FA 3) (FA 4)
V79 X1861X RG 1 PITCH SMRD 1=SYNC SPD 1 S/S (X1866X) (X1871X) (X1876X) FA 1 (FA 2) (FA 3) (FA 4)
V79 X1860X RG 1 ROLL SMRD 1=SYNC SPD 1 S/S (X1865X) (X1870X) (X1875X) FA 1 (FA 2) (FA 3) (FA 4)

V79 R1832C RG 1 Y RATE UNCOMP -20.44 TO 20.44°/SEC 1 S/S (R1837C) (R1842C) (R1847C) FA 1 (FA 2) (FA 3) (FA 4)
V79 R1831C RG 1 P RATE UNCOMP -20.44 TO 20.44°/SEC 1 S/S (R1836C) (R1841C) (R1846C) FA 1 (FA 2) (FA 3) (FA 4)
V79 R1830C RG 1 R RATE UNCOMP -40.88 TO 40.88°/SEC 1 S/S (R1835C) (R1840C) (R1845C) FA 1 (FA 2) (FA 3) (FA 4)

RGA (4) 1307 BULKHEAD
AA (4) AVIONIC
RH SRB
PITCH RATE POSITIVE
YAW RATE POSITIVE
LATERAL ACCELERATION POSITIVE
NORMAL ACCELERATION NEGATIVE
+Y_B
+Z_B
RGA (2) FWD SKIRT

ORBITER ASSEMBLY 4 ACCELEROMETERS
ORBITER ASSEMBLY 3 ACCELEROMETERS
ORBITER ASSEMBLY 2 ACCELEROMETERS
ORBITER ASSEMBLY 1 ACCELEROMETERS
LATERAL ACCELEROMETER
NORMAL ACCELEROMETER

POWER SUPPLY
FILTER
REG
DC TO DC AC CONV
-15 VDC
+15 VDC
+5 VDC

V79 K2080X AA 1 LAT ACCEL BITE 1=ON 1 S/S (K2083X) (K2086X) (K2089X) FF 1 (FF 2) (FF 3) (FF 4)
V79 K2081X AA 1 NORM ACCEL BITE 1=ON 1 S/S (K2084X) (K2087X) (K2090X) FF 1 (FF 2) (FF 3) (FF 4)

PICKOFF LAMP
PENDULUM/ TORQUE GENERATOR
N
S
PHOTO DIODE PICKOFF
BITE AMP
CURRENT AMP
PREFILTER LOW PASS 50 RAD/SEC
BUFFER AMP
+5 VDC
±15 VDC

V79 A2040C AA 1 LAT ACC UNCOMP -1.02 TO 1.02 G 1 S/S (A2043C) (A2046C) (A2049C) FF 1 (FF 2) (FF 3) (FF 4)
V79 A2041C AA 1 NORM ACC UNCOMP -4.09 TO 4.09 G 1 S/S (A2044C) (A2047C) (A2049C) FF 1 (FF 2) (FF 3) (FF 4)

BASIC REV E-6

DATE:	NAME:	VERSION:
DATE: 08/18/90	NAME: MAG	VERSION: INR: 13
DATE: 07/28/94	NAME: PSD	VERSION: INR: 14
DATE: 08/04/94	NAME: VSH	VERSION: INR: 15

ADTA 4

ADTA 2

ADTA 3

ADTA 1

TRANSDUCER PaU

TRANSDUCER PaC

TRANSDUCER PaL

TRANSDUCER PS

TRANSDUCER TEMP

SERIAL SHIFT REGISTER

20 BIT BINARY COUNTER

SENSOR WINDOW

PS DATA SELECT

PS MEMORY SELECT

1 MHZ CLOCK

PS CONTROL

READ ONLY MEMORY (24 WORDS BY 16 BITS)

RESET

SHIFT ENABLE

COUNTER ENABLE

MEMORY

OFFSET

SLOPE

A/D TEST

TEMP BRIDGE

TT HI

TT LO

POWER SUPPLY TEST

PWR SUPPLY

POWER SUPPLY INTERNAL 5V REG

OSCILLATOR/RAMP GENERATOR

45V ZENER

EMI FILTER

500 KHZ CLOCK

CLOCK GENERATOR

4 MHZ CRYSTAL OSCILLATOR

2 MHZ

1 MHZ

500 KHZ

REG ALL ZEROS

FRAME MARK

SENSOR WINDOW

COUNTER

36K COUNT

38K COUNT

A/D CONVERTER

ADDRESSABLE SWITCH

POLARITY DETECTOR

CONTROL LOGIC

A/D SWITCHING LADDER

SEQUENTIAL APPROXIMATION REGISTER

BIT 7-18 I/O DATA

DISCRETE INPUT BUFFER

LOW TEST CMD

HIGH TEST CMD

DIGITAL OUTPUT

PARALLEL SERIAL OUT STORAGE BUFFER

MANCHESTER ENCODER

OUTPUT CONTROL

MESSAGE DISCRETE (GATE)

WORD DISCRETE (GATE)

SERIAL DIGITAL DATA

ADTA SELF TEST LIMITS

	HI TEST	LO TEST
P_S	0.814 ±.001	24.888 ±.001 INHG
PaC	5.475 ±.002	29.528 ±.002 INHG
PaU	2.742 ±.002	21.710 ±.002 INHG
PaL	1.710 ±.002	14.715 ±.002 INHG
T	173.98 ±.02	16.52 ±.02 DEG C
PS DOT	1.383 ±.0015	5.589±.0015 INHG/MIN

I/O DATA PRE-SIGNAL FLOW DATA BUS

SERIAL TO PARALLEL CONVERTER

DIGITAL PROCESSOR

I/O DATA

ADDRESS AND CONTROL

CPU

CPU DATA

READ ONLY MEMORY 1536 20 BIT WORDS

READ/WRITE MEMORY 512 10 BIT HALF-WORDS

A/D COMPLETE

START A/D

ANALOG ADDRESS (4 BITS)

PS SELECT

PaC SELECT

PaL SELECT

PaU SELECT

DATA SELECT

MEMORY SELECT

DISCRETE INPUT SELECT

I/O DEVICE SELECTOR LOGIC

STORAGE BUFFER UPDATE

ADTA 1 LOW TEST CMD (X8301X) (X7801X) (X8801X) VT1K7301X (FF 3) (FF 2) (FF 4) FF 1

ADTA 1 HIGH TEST CMD (X8302X) (X7802X) (X8802X) VT1K7302X (FF 3) (FF 2) (FF 4) FF 1

NAV SENSOR FAIL V72X4580X FF 3 C&W ELECTRONICS (RED) AIR DATA PML F7

INPUT VBOX4840X ADTA DILEMMA | MOD GRX | TEST | ZONE B4, A4

VT1 XT021B (X8021B) (X7521B) (X8521B) ADTA 1 GOOD 1=GOOD 1 S/S C FF 1 (FF 3) (FF 2) (FF 4)

VT1 XT024B (X8034B) (X7534B) (X8534B) ADTA 1 DISC INPUTS 1=GOOD 1 S/S C FF 1 (FF 3) (FF 2) (FF 4)

VT1 XT023B (X8023B) (X7523B) (X8523B) ADTA 1 HIGH TEST MODE 1=ON 1 S/S FF 1 (FF 3) (FF 2) (FF 4)

VT1 XT024B (X8024B) (X7524B) (X8524B) ADTA 1 LOW TEST MODE 1=ON 1 S/S FF 1 (FF 3) (FF 2) (FF 4)

VT1 XT025B (X8025B) (X7525B) (X8525B) ADTA 1 PGL GOOD 1=GOOD 1 S/S FF 1 (FF 3) (FF 2) (FF 4)

VT1 XT026B (X8026B) (X7526B) (X8526B) ADTA 1 PGU GOOD 1=GOOD 1 S/S FF 1 (FF 3) (FF 2) (FF 4)

VT1 XT027B (X8027B) (X7527B) (X8527B) ADTA 1 PGC GOOD 1=GOOD 1 S/S FF 1 (FF 3) (FF 2) (FF 4)

VT1 XT028B (X8028B) (X7528B) (X8528B) ADTA 1 PS GOOD 1=GOOD 1 S/S FF 1 (FF 3) (FF 2) (FF 4)

VT1 XT029B (X8029B) (X7529B) (X8529B) ADTA 1 A/D CONV GOOD 1=GOOD 1 S/S FF 1 (FF 3) (FF 2) (FF 4)

VT1 XT030B (X8030B) (X7530B) (X8530B) ADTA 1 ELEC GOOD 1=GOOD 1 S/S FF 1 (FF 3) (FF 2) (FF 4)

VT1 XT031B (X8031B) (X7531B) (X8531B) ADTA 1 TEMP CKT GOOD 1=GOOD 1 S/S FF 1 (FF 3) (FF 2) (FF 4)

VT1 XT032B (X8032B) (X7532B) (X8532B) ADTA 1 SUM CHK GOOD 1=GOOD 1 S/S FF 1 (FF 3) (FF 2) (FF 4)

VT1 XT033B (X8033B) (X7533B) (X8533B) ADTA 1 PWR SUP GOOD 1=GOOD 1 S/S FF 1 (FF 3) (FF 2) (FF 4)

VT1 PT040B (P8040B) (P7540B) (P8540B) ADTA 1 STATIC PRESS -36 TO +36 INHG 12.5 S/S C FF 1 (FF 3) (FF 2) (FF 4)

VT1 PT140B (PB140B) (PT640B) (PB640B) ADTA 1 PGU -52 TO +52 INHG 12.5 S/S C FF 1 (FF 3) (FF 2) (FF 4)

VT1 PT080B (P8080B) (P7580B) (P8580B) ADTA 1 PGC -52 TO +52 INHG 12.5 S/S C FF 1 (FF 3) (FF 2) (FF 4)

VT1 TT100B (T8100B) (T7600B) (T8600B) ADTA 1 TOTAL TEMP -655 TO +655 °C 1 S/S C FF 1 (FF 3) (FF 2) (FF 4)

VT1 PT120B (PB120B) (PT620B) (PB620B) ADTA 1 PGL -52 TO +52 INHG 12.5 S/S C FF 1 (FF 3) (FF 2) (FF 4)

WORD REQUEST FF 1 (FF 3) (FF 2) (FF 4)

MESSAGE REQUEST FF 1 (FF 3) (FF 2) (FF 4)

MN C ADTA 4 5A CB20

MN B ADTA 2 5A PML 015E CB25

MN C ADTA 3 5A CB19

MN A ADTA 1 5A PML014E CB26

V_{MNB} 015

V_{MNA} 014

VT1 ST300X (S830OX) (S780OX) (S880OX) ADTA 1 PWR ON CMD 1=ON 1 S/S FF 1 (FF 3) (FF 2) (FF 4)

△1 SELF TEST EXERCISES STORED VALUES IN THE DIGITAL PROCESSOR AND PERFORMS A PRESSURE COMPARISON TEST. TOLERANCES ARE GIVEN FOR THE STORED DIGITAL PROCESSOR VALUES TO ALLOW FOR BINARY TO DECIMAL CONVERSION. MISCOMPARES IN THE PRESSURE COMPARISON TEST ARE ANNUNCIATED THROUGH BITE

△6 PS DOT (IN HG/MIN) IS NOT USED

△5 ADTA 1,2 AT 12.5 S/S
ADTA 3,4 AT 1 S/S

△4 ADTA WARMUP TIME: 2 SEC

△3 MOTORS DRIVE THROUGH A DIFFERENTIAL ASSEMBLY

△2 VT1MT020P (M8020P, M7520P, M8520P) ADTA 1 (3,2,4) MODE STATUS. THE ADTA DISCRETE EVENT OUTPUTS ARE SERIAL DIGITAL DATA OF THE MODE STATUS (PARENT) WORD

NOTES: △1 FAILURES ARE DETERMINED BY COMPARING PARAMETER DIFFERENCES TO A CALCULATED THRESHOLD. FAILURES ARE DIRECTLY ISOLATED BY FDIR SOFTWARE, AND DILEMMAS MUST BE RESOLVED BY THE CREW

9 ADS

SIGNATURE	DATE	NATIONAL AERONAUTICS AND SPACE ADMINISTRATION LYNDON B. JOHNSON SPACE CENTER HOUSTON, TEXAS
DSGN VICKI S. DOGGETT	10/15/79	
DR		
ENGR KEVIN A. DUNN		AIR DATA SYSTEM
ENGR		
APP	8/16/94	
APP	8/9/94	SPACE SHUTTLE — DWG NO 9.9
APP	8-9-94	ALL
LTR E	PCN 4	126.5 X 34 — PAGE — SHEET 1 OF 1

BASIC REV E-4

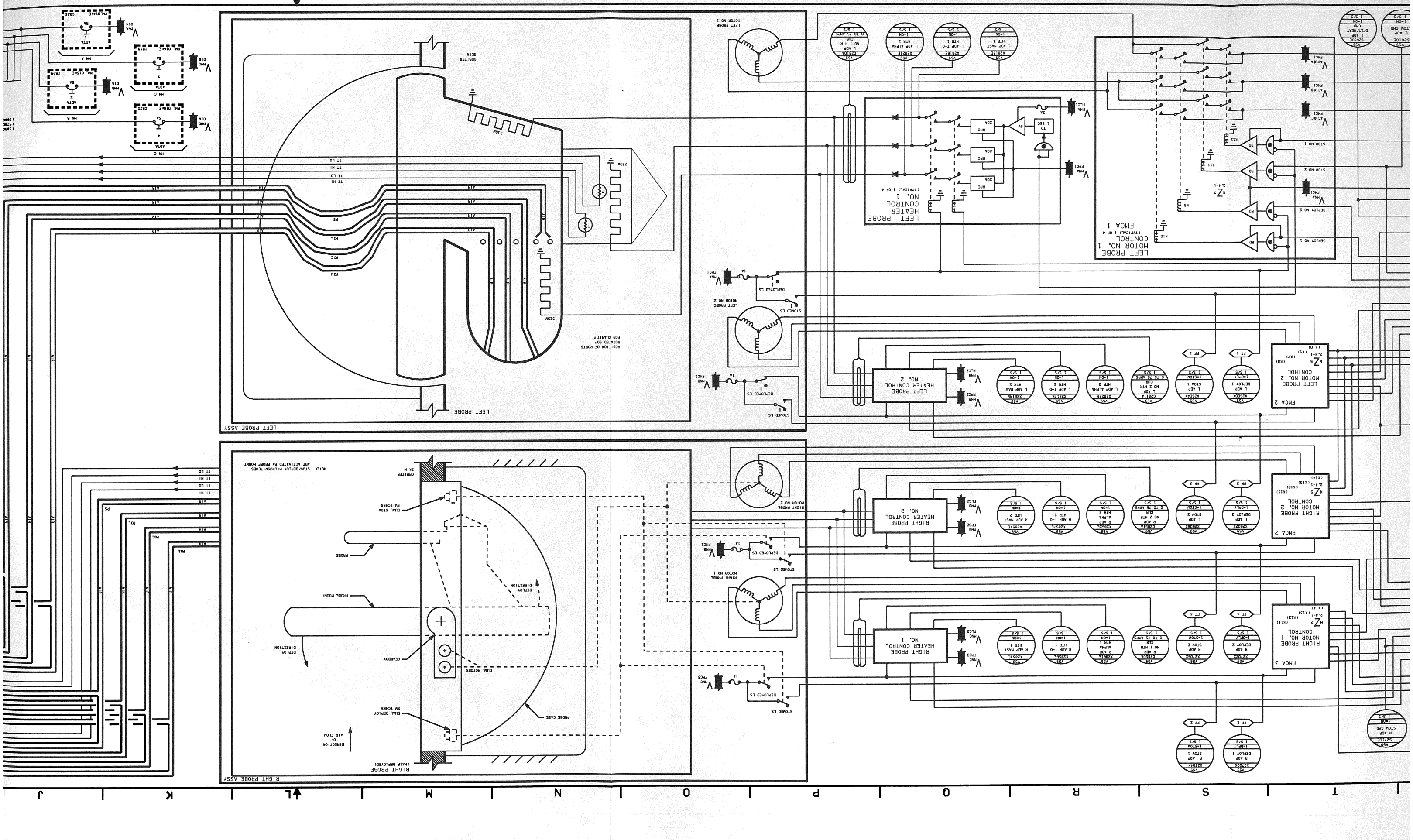
LEFT PROBE ASSY
ORBITER SKIN
330W
210W
225W
LEFT PROBE
POSITION OF PORTS ROTATED 90° FOR CLARITY
TT LO
TT HI
AIR
PS
RCL
RCC
RCU
LEFT PROBE MOTOR NO 1
LEFT PROBE MOTOR NO 2
DEPLOYED LS
STOWED LS
1A
PMA PFC1
PMB PFC2
PMC PFC3
LEFT PROBE HEATER CONTROL NO. 1
(TYPICAL) 1 OF 4
RPC
20A
1 SEC
TD
3A
SW
LEFT PROBE MOTOR CONTROL NO. 1
(TYPICAL) 1 OF 4
FMCA 1
STOW NO 1
STOW NO 2
DEPLOY NO 2
DEPLOY NO 1
RD
K12
K11
K10
K9
K7
NZ 2,4-1
PMA PFC1
AC10A
AC10B
AC10C
L ADP HEATER MTR 1
L ADP MAST HTR 1
L ADP T-O HTR 1
L ADP ALPHA HTR 1
L ADP NO 1 HTR CUR
L ADP NO 2 HTR CUR
L ADP STOW 1
L ADP DEPLOY 1
L ADP STOW 2
L ADP DEPLOY 2
LEFT PROBE HEATER CONTROL NO. 2
PMB PFC2
PMC PFC3
FMCA 2
FMCA 3
RIGHT PROBE ASSY
RIGHT PROBE MOTOR NO 1
RIGHT PROBE MOTOR NO 2
RIGHT PROBE (HALF DEPLOYED)
NOTE: STOW/DEPLOY MICROSWITCHES ARE ACTIVATED BY PROBE MOUNT
DUAL STOW SWITCHES
PROBE
PROBE MOUNT
DEPLOY DIRECTION
GEARBOX
DUAL MOTORS
PROBE CASE
DUAL DEPLOY SWITCHES
DIRECTION OF AIR FLOW
R ADP HEATER MTR 1
R ADP MAST HTR 1
R ADP T-O HTR 1
R ADP ALPHA HTR 1
R ADP NO 1 HTR CUR
R ADP NO 2 HTR CUR
R ADP STOW 1
R ADP DEPLOY 1
R ADP STOW 2
R ADP DEPLOY 2
RIGHT PROBE HEATER CONTROL NO. 2
RIGHT PROBE HEATER CONTROL NO. 1
RIGHT PROBE MOTOR CONTROL NO. 2
RIGHT PROBE MOTOR CONTROL NO. 1
PMA
PMB
PMC
PMD
A10A
A10B
A10C
A10D
A10E
A10F
A10G
A10H
A10J
A10K
A10L
A10M
A10N
A10P
A10Q
A10R
A10S
A10T
A10U
A10V
A10W
A10X
A10Y
A10Z
A10AA
A10AB
A10AC
A10AD
A10AE
A10AF
A10AG
A10AH
A10AJ
A10AK
A10AL
A10AM
A10AN
A10AP
A10AQ
A10AR
A10AS
A10AT
A10AU
A10AV
A10AW
A10AX
A10AY
A10AZ
A10BA
A10BB
A10BC
A10BD
A10BE
A10BF
A10BG
A10BH
A10BJ
A10BK
A10BL
A10BM
A10BN
A10BP
A10BQ
A10BR
A10BS
A10BT
A10BU
A10BV
A10BW
A10BX
A10BY
A10BZ
A10CA
A10CB
A10CC
A10CD
A10CE
A10CF
A10CG
A10CH
A10CJ
A10CK
A10CL
A10CM
A10CN
A10CP
A10CQ
A10CR
A10CS
A10CT
A10CU
A10CV
A10CW
A10CX
A10CY
A10CZ
A10DA
A10DB
A10DC
A10DD
A10DE
A10DF
A10DG
A10DH
A10DJ
A10DK
A10DL
A10DM
A10DN
A10DP
A10DQ
A10DR
A10DS
A10DT
A10DU
A10DV
A10DW
A10DX
A10DY
A10DZ
A10EA
A10EB
A10EC
A10ED
A10EE
A10EF
A10EG
A10EH
A10EJ
A10EK
A10EL
A10EM
A10EN
A10EP
A10EQ
A10ER
A10ES
A10ET
A10EU
A10EV
A10EW
A10EX
A10EY
A10EZ
A10FA
A10FB
A10FC
A10FD
A10FE
A10FF
A10FG
A10FH
A10FJ
A10FK
A10FL
A10FM
A10FN
A10FP
A10FQ
A10FR
A10FS
A10FT
A10FU
A10FV
A10FW
A10FX
A10FY
A10FZ
A10GA
A10GB
A10GC
A10GD
A10GE
A10GF
A10GG
A10GH
A10GJ
A10GK
A10GL
A10GM
A10GN
A10GP
A10GQ
A10GR
A10GS
A10GT
A10GU
A10GV
A10GW
A10GX
A10GY
A10GZ
A10HA
A10HB
A10HC
A10HD
A10HE
A10HF
A10HG
A10HH
A10HJ
A10HK
A10HL
A10HM
A10HN
A10HP
A10HQ
A10HR
A10HS
A10HT
A10HU
A10HV
A10HW
A10HX
A10HY
A10HZ
A10JA
A10JB
A10JC
A10JD
A10JE
A10JF
A10JG
A10JH
A10JJ
A10JK
A10JL
A10JM
A10JN
A10JP
A10JQ
A10JR
A10JS
A10JT
A10JU
A10JV
A10JW
A10JX
A10JY
A10JZ
A10KA
A10KB
A10KC
A10KD
A10KE
A10KF
A10KG
A10KH
A10KJ
A10KK
A10KL
A10KM
A10KN
A10KP
A10KQ
A10KR
A10KS
A10KT
A10KU
A10KV
A10KW
A10KX
A10KY
A10KZ
A10LA
A10LB
A10LC
A10LD
A10LE
A10LF
A10LG
A10LH
A10LJ
A10LK
A10LL
A10LM
A10LN
A10LP
A10LQ
A10LR
A10LS
A10LT
A10LU
A10LV
A10LW
A10LX
A10LY
A10LZ
A10MA
A10MB
A10MC
A10MD
A10ME
A10MF
A10MG
A10MH
A10MJ
A10MK
A10ML
A10MM
A10MN
A10MP
A10MQ
A10MR
A10MS
A10MT
A10MU
A10MV
A10MW
A10MX
A10MY
A10MZ
A10NA
A10NB
A10NC
A10ND
A10NE
A10NF
A10NG
A10NH
A10NJ
A10NK
A10NL
A10NM
A10NN
A10NP
A10NQ
A10NR
A10NS
A10NT
A10NU
A10NV
A10NW
A10NX
A10NY
A10NZ
A10PA
A10PB
A10PC
A10PD
A10PE
A10PF
A10PG
A10PH
A10PJ
A10PK
A10PL
A10PM
A10PN
A10PP
A10PQ
A10PR
A10PS
A10PT
A10PU
A10PV
A10PW
A10PX
A10PY
A10PZ
A10QA
A10QB
A10QC
A10QD
A10QE
A10QF
A10QG
A10QH
A10QJ
A10QK
A10QL
A10QM
A10QN
A10QP
A10QQ
A10QR
A10QS
A10QT
A10QU
A10QV
A10QW
A10QX
A10QY
A10QZ
A10RA
A10RB
A10RC
A10RD
A10RE
A10RF
A10RG
A10RH
A10RJ
A10RK
A10RL
A10RM
A10RN
A10RP
A10RQ
A10RR
A10RS
A10RT
A10RU
A10RV
A10RW
A10RX
A10RY
A10RZ
A10SA
A10SB
A10SC
A10SD
A10SE
A10SF
A10SG
A10SH
A10SJ
A10SK
A10SL
A10SM
A10SN
A10SP
A10SQ
A10SR
A10SS
A10ST
A10SU
A10SV
A10SW
A10SX
A10SY
A10SZ
A10TA
A10TB
A10TC
A10TD
A10TE
A10TF
A10TG
A10TH
A10TJ
A10TK
A10TL
A10TM
A10TN
A10TP
A10TQ
A10TR
A10TS
A10TT
A10TU
A10TV
A10TW
A10TX
A10TY
A10TZ
A10UA
A10UB
A10UC
A10UD
A10UE
A10UF
A10UG
A10UH
A10UJ
A10UK
A10UL
A10UM
A10UN
A10UP
A10UQ
A10UR
A10US
A10UT
A10UU
A10UV
A10UW
A10UX
A10UY
A10UZ
A10VA
A10VB
A10VC
A10VD
A10VE
A10VF
A10VG
A10VH
A10VJ
A10VK
A10VL
A10VM
A10VN
A10VP
A10VQ
A10VR
A10VS
A10VT
A10VU
A10VV
A10VW
A10VX
A10VY
A10VZ
A10WA
A10WB
A10WC
A10WD
A10WE
A10WF
A10WG
A10WH
A10WJ
A10WK
A10WL
A10WM
A10WN
A10WP
A10WQ
A10WR
A10WS
A10WT
A10WU
A10WV
A10WW
A10WX
A10WY
A10WZ
A10XA
A10XB
A10XC
A10XD
A10XE
A10XF
A10XG
A10XH
A10XJ
A10XK
A10XL
A10XM
A10XN
A10XP
A10XQ
A10XR
A10XS
A10XT
A10XU
A10XV
A10XW
A10XX
A10XY
A10XZ
A10YA
A10YB
A10YC
A10YD
A10YE
A10YF
A10YG
A10YH
A10YJ
A10YK
A10YL
A10YM
A10YN
A10YP
A10YQ
A10YR
A10YS
A10YT
A10YU
A10YV
A10YW
A10YX
A10YY
A10YZ
A10ZA
A10ZB
A10ZC
A10ZD
A10ZE
A10ZF
A10ZG
A10ZH
A10ZJ
A10ZK
A10ZL
A10ZM
A10ZN
A10ZP
A10ZQ
A10ZR
A10ZS
A10ZT
A10ZU
A10ZV
A10ZW
A10ZX
A10ZY
A10ZZ
A11A
A11B
A11C
A11D
A11E
A11F
A11G
A11H
A11J
A11K
A11L
A11M
A11N
A11P
A11Q
A11R
A11S
A11T
A11U
A11V
A11W
A11X
A11Y
A11Z
A11AA
A11AB
A11AC
A11AD
A11AE
A11AF
A11AG
A11AH
A11AJ
A11AK
A11AL
A11AM
A11AN
A11AP
A11AQ
A11AR
A11AS
A11AT
A11AU
A11AV
A11AW
A11AX
A11AY
A11AZ
A11BA
A11BB
A11BC
A11BD
A11BE
A11BF
A11BG
A11BH
A11BJ
A11BK
A11BL
A11BM
A11BN
A11BP
A11BQ
A11BR
A11BS
A11BT
A11BU
A11BV
A11BW
A11BX
A11BY
A11BZ
A11CA
A11CB
A11CC
A11CD
A11CE
A11CF
A11CG
A11CH
A11CJ
A11CK
A11CL
A11CM
A11CN
A11CP
A11CQ
A11CR
A11CS
A11CT
A11CU
A11CV
A11CW
A11CX
A11CY
A11CZ
A11DA
A11DB
A11DC
A11DD
A11DE
A11DF
A11DG
A11DH
A11DJ
A11DK
A11DL
A11DM
A11DN
A11DP
A11DQ
A11DR
A11DS
A11DT
A11DU
A11DV
A11DW
A11DX
A11DY
A11DZ
A11EA
A11EB
A11EC
A11ED
A11EE
A11EF
A11EG
A11EH
A11EJ
A11EK
A11EL
A11EM
A11EN
A11EP
A11EQ
A11ER
A11ES
A11ET
A11EU
A11EV
A11EW
A11EX
A11EY
A11EZ
A11FA
A11FB
A11FC
A11FD
A11FE
A11FF
A11FG
A11FH
A11FJ
A11FK
A11FL
A11FM
A11FN
A11FP
A11FQ
A11FR
A11FS
A11FT
A11FU
A11FV
A11FW
A11FX
A11FY
A11FZ
A11GA
A11GB
A11GC
A11GD
A11GE
A11GF
A11GG
A11GH
A11GJ
A11GK
A11GL
A11GM
A11GN
A11GP
A11GQ
A11GR
A11GS
A11GT
A11GU
A11GV
A11GW
A11GX
A11GY
A11GZ
A11HA
A11HB
A11HC
A11HD
A11HE
A11HF
A11HG
A11HH
A11HJ
A11HK
A11HL
A11HM
A11HN
A11HP
A11HQ
A11HR
A11HS
A11HT
A11HU
A11HV
A11HW
A11HX
A11HY
A11HZ
A11JA
A11JB
A11JC
A11JD
A11JE
A11JF
A11JG
A11JH
A11JJ
A11JK
A11JL
A11JM
A11JN
A11JP
A11JQ
A11JR
A11JS
A11JT
A11JU
A11JV
A11JW
A11JX
A11JY
A11JZ
A11KA
A11KB
A11KC
A11KD
A11KE
A11KF
A11KG
A11KH
A11KJ
A11KK
A11KL
A11KM
A11KN
A11KP
A11KQ
A11KR
A11KS
A11KT
A11KU
A11KV
A11KW
A11KX
A11KY
A11KZ
A11LA
A11LB
A11LC
A11LD
A11LE
A11LF
A11LG
A11LH
A11LJ
A11LK
A11LL
A11LM
A11LN
A11LP
A11LQ
A11LR
A11LS
A11LT
A11LU
A11LV
A11LW
A11LX
A11LY
A11LZ
A11MA
A11MB
A11MC
A11MD
A11ME
A11MF
A11MG
A11MH
A11MJ
A11MK
A11ML
A11MM
A11MN
A11MP
A11MQ
A11MR
A11MS
A11MT
A11MU
A11MV
A11MW
A11MX
A11MY
A11MZ
A11NA
A11NB
A11NC
A11ND
A11NE
A11NF
A11NG
A11NH
A11NJ
A11NK
A11NL
A11NM
A11NN
A11NP
A11NQ
A11NR
A11NS
A11NT
A11NU
A11NV
A11NW
A11NX
A11NY
A11NZ
A11PA
A11PB
A11PC
A11PD
A11PE
A11PF
A11PG
A11PH
A11PJ
A11PK
A11PL
A11PM
A11PN
A11PP
A11PQ
A11PR
A11PS
A11PT
A11PU
A11PV
A11PW
A11PX
A11PY
A11PZ
A11QA
A11QB
A11QC
A11QD
A11QE
A11QF
A11QG
A11QH
A11QJ
A11QK
A11QL
A11QM
A11QN
A11QP
A11QQ
A11QR
A11QS
A11QT
A11QU
A11QV
A11QW
A11QX
A11QY
A11QZ
A11RA
A11RB
A11RC
A11RD
A11RE
A11RF
A11RG
A11RH
A11RJ
A11RK
A11RL
A11RM
A11RN
A11RP
A11RQ
A11RR
A11RS
A11RT
A11RU
A11RV
A11RW
A11RX
A11RY
A11RZ
A11SA
A11SB
A11SC
A11SD
A11SE
A11SF
A11SG
A11SH
A11SJ
A11SK
A11SL
A11SM
A11SN
A11SP
A11SQ
A11SR
A11SS
A11ST
A11SU
A11SV
A11SW
A11SX
A11SY
A11SZ
A11TA
A11TB
A11TC
A11TD
A11TE
A11TF
A11TG
A11TH
A11TJ
A11TK
A11TL
A11TM
A11TN
A11TP
A11TQ
A11TR
A11TS
A11TT
A11TU
A11TV
A11TW
A11TX
A11TY
A11TZ
A11UA
A11UB
A11UC
A11UD
A11UE
A11UF
A11UG
A11UH
A11UJ
A11UK
A11UL
A11UM
A11UN
A11UP
A11UQ
A11UR
A11US
A11UT
A11UU
A11UV
A11UW
A11UX
A11UY
A11UZ
A11VA
A11VB
A11VC
A11VD
A11VE
A11VF
A11VG
A11VH
A11VJ
A11VK
A11VL
A11VM
A11VN
A11VP
A11VQ
A11VR
A11VS
A11VT
A11VU
A11VV
A11VW
A11VX
A11VY
A11VZ
A11WA
A11WB
A11WC
A11WD
A11WE
A11WF
A11WG
A11WH
A11WJ
A11WK
A11WL
A11WM
A11WN
A11WP
A11WQ
A11WR
A11WS
A11WT
A11WU
A11WV
A11WW
A11WX
A11WY
A11WZ
A11XA
A11XB
A11XC
A11XD
A11XE
A11XF
A11XG
A11XH
A11XJ
A11XK
A11XL
A11XM
A11XN
A11XP
A11XQ
A11XR
A11XS
A11XT
A11XU
A11XV
A11XW
A11XX
A11XY
A11XZ
A11YA
A11YB
A11YC
A11YD
A11YE
A11YF
A11YG
A11YH
A11YJ
A11YK
A11YL
A11YM
A11YN
A11YP
A11YQ
A11YR
A11YS
A11YT
A11YU
A11YV
A11YW
A11YX
A11YY
A11YZ
A11ZA
A11ZB
A11ZC
A11ZD
A11ZE
A11ZF
A11ZG
A11ZH
A11ZJ
A11ZK
A11ZL
A11ZM
A11ZN
A11ZP
A11ZQ
A11ZR
A11ZS
A11ZT
A11ZU
A11ZV
A11ZW
A11ZX
A11ZY
A11ZZ
A12A
A12B
A12C
A12D
A12E
A12F
A12G
A12H
A12J
A12K
A12L
A12M
A12N
A12P
A12Q
A12R
A12S
A12T
A12U
A12V
A12W
A12X
A12Y
A12Z
A12AA
A12AB
A12AC
A12AD
A12AE
A12AF
A12AG
A12AH
A12AJ
A12AK
A12AL
A12AM
A12AN
A12AP
A12AQ
A12AR
A12AS
A12AT
A12AU
A12AV
A12AW
A12AX
A12AY
A12AZ
A12BA
A12BB
A12BC
A12BD
A12BE
A12BF
A12BG
A12BH
A12BJ
A12BK
A12BL
A12BM
A12BN
A12BP
A12BQ
A12BR
A12BS
A12BT
A12BU
A12BV
A12BW
A12BX
A12BY
A12BZ
A12CA
A12CB
A12CC
A12CD
A12CE
A12CF
A12CG
A12CH
A12CJ
A12CK
A12CL
A12CM
A12CN
A12CP
A12CQ
A12CR
A12CS
A12CT
A12CU
A12CV
A12CW
A12CX
A12CY
A12CZ
A12DA
A12DB
A12DC
A12DD
A12DE
A12DF
A12DG
A12DH
A12DJ
A12DK
A12DL
A12DM
A12DN
A12DP
A12DQ
A12DR
A12DS
A12DT
A12DU
A12DV
A12DW
A12DX
A12DY
A12DZ
A12EA
A12EB
A12EC
A12ED
A12EE
A12EF
A12EG
A12EH
A12EJ
A12EK
A12EL
A12EM
A12EN
A12EP
A12EQ
A12ER
A12ES
A12ET
A12EU
A12EV
A12EW
A12EX
A12EY
A12EZ
A12FA
A12FB
A12FC
A12FD
A12FE
A12FF
A12FG
A12FH
A12FJ
A12FK
A12FL
A12FM
A12FN
A12FP
A12FQ
A12FR
A12FS
A12FT
A12FU
A12FV
A12FW
A12FX
A12FY
A12FZ
A12GA
A12GB
A12GC
A12GD
A12GE
A12GF
A12GG
A12GH
A12GJ
A12GK
A12GL
A12GM
A12GN
A12GP
A12GQ
A12GR
A12GS
A12GT
A12GU
A12GV
A12GW
A12GX
A12GY
A12GZ
A12HA
A12HB
A12HC
A12HD
A12HE
A12HF
A12HG
A12HH
A12HJ
A12HK
A12HL
A12HM
A12HN
A12HP
A12HQ
A12HR
A12HS
A12HT
A12HU
A12HV
A12HW
A12HX
A12HY
A12HZ
A12JA
A12JB
A12JC
A12JD
A12JE
A12JF
A12JG
A12JH
A12JJ
A12JK
A12JL
A12JM
A12JN
A12JP
A12JQ
A12JR
A12JS
A12JT
A12JU
A12JV
A12JW
A12JX
A12JY
A12JZ
A12KA
A12KB
A12KC
A12KD
A12KE
A12KF
A12KG
A12KH
A12KJ
A12KK
A12KL
A12KM
A12KN
A12KP
A12KQ
A12KR
A12KS
A12KT
A12KU
A12KV
A12KW
A12KX
A12KY
A12KZ
A12LA
A12LB
A12LC
A12LD
A12LE
A12LF
A12LG
A12LH
A12LJ
A12LK
A12LL
A12LM
A12LN
A12LP
A12LQ
A12LR
A12LS
A12LT
A12LU
A12LV
A12LW
A12LX
A12LY
A12LZ
A12MA
A12MB
A12MC
A12MD
A12ME
A12MF
A12MG
A12MH
A12MJ
A12MK
A12ML
A12MM
A12MN
A12MP
A12MQ
A12MR
A12MS
A12MT
A12MU
A12MV
A12MW
A12MX
A12MY
A12MZ
A12NA
A12NB
A12NC
A12ND
A12NE
A12NF
A12NG
A12NH
A12NJ
A12NK
A12NL
A12NM
A12NN
A12NP
A12NQ
A12NR
A12NS
A12NT
A12NU
A12NV
A12NW
A12NX
A12NY
A12NZ
A12PA
A12PB
A12PC
A12PD
A12PE
A12PF
A12PG
A12PH
A12PJ
A12PK
A12PL
A12PM
A12PN
A12PP
A12PQ
A12PR
A12PS
A12PT
A12PU
A12PV
A12PW
A12PX
A12PY
A12PZ
A12QA
A12QB
A12QC
A12QD
A12QE
A12QF
A12QG
A12QH
A12QJ
A12QK
A12QL
A12QM
A12QN
A12QP
A12QQ
A12QR
A12QS
A12QT
A12QU
A12QV
A12QW
A12QX
A12QY
A12QZ
A12RA
A12RB
A12RC
A12RD
A12RE
A12RF
A12RG
A12RH
A12RJ
A12RK
A12RL
A12RM
A12RN
A12RP
A12RQ
A12RR
A12RS
A12RT
A12RU
A12RV
A12RW
A12RX
A12RY
A12RZ
A12SA
A12SB
A12SC
A12SD
A12SE
A12SF
A12SG
A12SH
A12SJ
A12SK
A12SL
A12SM
A12SN
A12SP
A12SQ
A12SR
A12SS
A12ST
A12SU
A12SV
A12SW
A12SX
A12SY
A12SZ
A12TA
A12TB
A12TC
A12TD
A12TE
A12TF
A12TG
A12TH
A12TJ
A12TK
A12TL
A12TM
A12TN
A12TP
A12TQ
A12TR
A12TS
A12TT
A12TU
A12TV
A12TW
A12TX
A12TY
A12TZ
A12UA
A12UB
A12UC
A12UD
A12UE
A12UF
A12UG
A12UH
A12UJ
A12UK
A12UL
A12UM
A12UN
A12UP
A12UQ
A12UR
A12US
A12UT
A12UU
A12UV
A12UW
A12UX
A12UY
A12UZ
A12VA
A12VB
A12VC
A12VD
A12VE
A12VF
A12VG
A12VH
A12VJ
A12VK
A12VL
A12VM
A12VN
A12VP
A12VQ
A12VR
A12VS
A12VT
A12VU
A12VV
A12VW
A12VX
A12VY
A12VZ
A12WA
A12WB
A12WC
A12WD
A12WE
A12WF
A12WG
A12WH
A12WJ
A12WK
A12WL
A12WM
A12WN
A12WP
A12WQ
A12WR
A12WS
A12WT
A12WU
A12WV
A12WW
A12WX
A12WY
A12WZ
A12XA
A12XB
A12XC
A12XD
A12XE
A12XF
A12XG
A12XH
A12XJ
A12XK
A12XL
A12XM
A12XN
A12XP
A12XQ
A12XR
A12XS
A12XT
A12XU
A12XV
A12XW
A12XX
A12XY
A12XZ
A12YA
A12YB
A12YC
A12YD
A12YE
A12YF
A12YG
A12YH
A12YJ
A12YK
A12YL
A12YM
A12YN
A12YP
A12YQ
A12YR
A12YS
A12YT
A12YU
A12YV
A12YW
A12YX
A12YY
A12YZ
A12ZA
A12ZB
A12ZC
A12ZD
A12ZE
A12ZF
A12ZG
A12ZH
A12ZJ
A12ZK
A12ZL
A12ZM
A12ZN
A12ZP
A12ZQ
A12ZR
A12ZS
A12ZT
A12ZU
A12ZV
A12ZW
A12ZX
A12ZY
A12ZZ
A13A
A13B
A13C
A13D
A13E
A13F
A13G
A13H
A13J
A13K
A13L
A13M
A13N
A13P
A13Q
A13R
A13S
A13T
A13U
A13V
A13W
A13X
A13Y
A13Z
A13AA
A13AB
A13AC
A13AD
A13AE
A13AF
A13AG
A13AH
A13AJ
A13AK
A13AL
A13AM
A13AN
A13AP
A13AQ
A13AR
A13AS
A13AT
A13AU
A13AV
A13AW
A13AX
A13AY
A13AZ
A13BA
A13BB
A13BC
A13BD
A13BE
A13BF
A13BG
A13BH
A13BJ
A13BK
A13BL
A13BM
A13BN
A13BP
A13BQ
A13BR
A13BS
A13BT
A13BU
A13BV
A13BW
A13BX
A13BY
A13BZ
A13CA
A13CB
A13CC
A13CD
A13CE
A13CF
A13CG
A13CH
A13CJ
A13CK
A13CL
A13CM
A13CN
A13CP
A13CQ
A13CR
A13CS
A13CT
A13CU
A13CV
A13CW
A13CX
A13CY
A13CZ
A13DA
A13DB
A13DC
A13DD
A13DE
A13DF
A13DG
A13DH
A13DJ
A13DK
A13DL
A13DM
A13DN
A13DP
A13DQ
A13DR
A13DS
A13DT
A13DU
A13DV
A13DW
A13DX
A13DY
A13DZ
A13EA
A13EB
A13EC
A13ED
A13EE
A13EF
A13EG
A13EH
A13EJ
A13EK
A13EL
A13EM
A13EN
A13EP
A13EQ
A13ER
A13ES
A13ET
A13EU
A13EV
A13EW
A13EX
A13EY
A13EZ
A13FA
A13FB
A13FC
A13FD
A13FE
A13FF
A13FG
A13FH
A13FJ
A13FK
A13FL
A13FM
A13FN
A13FP
A13FQ
A13FR
A13FS
A13FT
A13FU
A13FV
A13FW
A13FX
A13FY
A13FZ
A13GA
A13GB
A13GC
A13GD
A13GE
A13GF
A13GG
A13GH
A13GJ
A13GK
A13GL
A13GM
A13GN
A13GP
A13GQ
A13GR
A13GS
A13GT
A13GU
A13GV
A13GW
A13GX
A13GY
A13GZ
A13HA
A13HB
A13HC
A13HD
A13HE
A13HF
A13HG
A13HH
A13HJ
A13HK
A13HL
A13HM
A13HN
A13HP
A13HQ
A13HR
A13HS
A13HT
A13HU
A13HV
A13HW
A13HX
A13HY
A13HZ
A13JA
A13JB
A13JC
A13JD
A13JE
A13JF
A13JG
A13JH
A13JJ
A13JK
A13JL
A13JM
A13JN
A13JP
A13JQ
A13JR
A13JS
A13JT
A13JU
A13JV
A13JW
A13JX
A13JY
A13JZ
A13KA
A13KB
A13KC
A13KD
A13KE
A13KF
A13KG
A13KH
A13KJ
A13KK
A13KL
A13KM
A13KN
A13KP
A13KQ
A13KR
A13KS
A13KT
A13KU
A13KV
A13KW
A13KX
A13KY
A13KZ
A13LA
A13LB
A13LC
A13LD
A13LE
A13LF
A13LG
A13LH
A13LJ
A13LK
A13LL
A13LM
A13LN
A13LP
A13LQ
A13LR
A13LS
A13LT
A13LU
A13LV
A13LW
A13LX
A13LY
A13LZ
A13MA
A13MB
A13MC
A13MD
A13ME
A13MF
A13MG
A13MH
A13MJ
A13MK
A13ML
A13MM
A13MN
A13MP
A13MQ
A13MR
A13MS
A13MT
A13MU
A13MV
A13MW
A13MX
A13MY
A13MZ
A13NA
A13NB
A13NC
A13ND
A13NE
A13NF
A13NG
A13NH
A13NJ
A13NK
A13NL
A13NM
A13NN
A13NP
A13NQ
A13NR
A13NS
A13NT
A13NU
A13NV
A13NW
A13NX
A13NY
A13NZ
A13PA
A13PB
A13PC
A13PD
A13PE
A13PF
A13PG
A13PH
A13PJ
A13PK
A13PL
A13PM
A13PN
A13PP
A13PQ
A13PR
A13PS
A13PT
A13PU
A13PV
A13PW
A13PX
A13PY
A13PZ
A13QA
A13QB
A13QC
A13QD
A13QE
A13QF
A13QG
A13QH
A13QJ
A13QK
A13QL
A13QM
A13QN
A13QP
A13QQ
A13QR
A13QS
A13QT
A13QU
A13QV
A13QW
A13QX
A13QY
A13QZ
A13RA
A13RB
A13RC
A13RD
A13RE
A13RF
A13RG
A13RH
A13RJ
A13RK
A13RL
A13RM
A13RN
A13RP
A13RQ
A13RR
A13RS
A13RT
A13RU
A13RV
A13RW
A13RX
A13RY
A13RZ
A13SA
A13SB
A13SC
A13SD
A13SE
A13SF
A13SG
A13SH
A13SJ
A13SK
A13SL
A13SM
A13SN
A13SP
A13SQ
A13SR
A13SS
A13ST
A13SU
A13SV
A13SW
A13SX
A13SY
A13SZ
A13TA
A13TB
A13TC
A13TD
A13TE
A13TF
A13TG
A13TH
A13TJ
A13TK
A13TL
A13TM
A13TN
A13TP
A13TQ
A13TR
A13TS
A13TT
A13TU
A13TV
A13TW
A13TX
A13TY
A13TZ
A13UA
A13UB
A13UC
A13UD
A13UE
A13UF
A13UG
A13UH
A13UJ
A13UK
A13UL
A13UM
A13UN
A13UP
A13UQ
A13UR
A13US
A13UT
A13UU
A13UV
A13UW
A13UX
A13UY
A13UZ
A13VA
A13VB
A13VC
A13VD
A13VE
A13VF
A13VG
A13VH
A13VJ
A13VK
A13VL
A13VM
A13VN
A13VP
A13VQ
A13VR
A13VS
A13VT
A13VU
A13VV
A13VW
A13VX
A13VY
A13VZ
A13WA
A13WB
A13WC
A13WD
A13WE
A13WF
A13WG
A13WH
A13WJ
A13WK
A13WL
A13WM
A13WN
A13WP
A13WQ
A13WR
A13WS
A13WT
A13WU
A13WV
A13WW
A13WX
A13WY
A13WZ
A13XA
A13XB
A13XC
A13XD
A13XE
A13XF
A13XG
A13XH
A13XJ
A13XK
A13XL
A13XM
A13XN
A13XP
A13XQ
A13XR
A13XS
A13XT
A13XU
A13XV
A13XW
A13XX
A13XY
A13XZ
A13YA
A13YB
A13YC
A13YD
A13YE
A13YF
A13YG
A13YH
A13YJ
A13YK
A13YL
A13YM
A13YN
A13YP
A13YQ
A13YR
A13YS
A13YT
A13YU
A13YV
A13YW
A13YX
A13YY
A13YZ
A13ZA
A13ZB
A13ZC
A13ZD
A13ZE
A13ZF
A13ZG
A13ZH
A13ZJ
A13ZK
A13ZL
A13ZM
A13ZN
A13ZP
A13ZQ
A13ZR
A13ZS
A13ZT
A13ZU
A13ZV
A13ZW
A13ZX
A13ZY
A13ZZ
A14A
A14B
A14C
A14D
A14E
A14F
A14G
A14H
A14J
A14K
A14L
A14M
A14N
A14P
A14Q
A14R
A14S
A14T
A14U
A14V
A14W
A14X
A14Y
A14Z
A14AA
A14AB
A14AC
A14AD
A14AE
A14AF
A14AG
A14AH
A14AJ
A14AK
A14AL
A14AM
A14AN
A14AP
A14AQ
A14AR
A14AS
A14AT
A14AU
A14AV
A14AW
A14AX
A14AY
A14AZ
A14BA
A14BB
A14BC
A14BD
A14BE
A14BF
A14BG
A14BH
A14BJ
A14BK
A14BL
A14BM
A14BN
A14BP
A14BQ
A14BR
A14BS
A14BT
A14BU
A14BV
A14BW
A14BX
A14BY
A14BZ
A14CA
A14CB
A14CC
A14CD
A14CE
A14CF
A14CG
A14CH
A14CJ
A14CK
A14CL
A14CM
A14CN
A14CP
A14CQ
A14CR
A14CS
A14CT
A14CU
A14CV
A14CW
A14CX
A14CY
A14CZ
A14DA
A14DB
A14DC
A14DD
A14DE
A14DF
A14DG
A14DH
A14DJ
A14DK
A14DL
A14DM
A14DN
A14DP
A14DQ
A14DR
A14DS
A14DT
A14DU
A14DV
A14DW
A14DX
A14DY
A14DZ
A14EA
A14EB
A14EC
A14ED
A14EE
A14EF
A14EG
A14EH
A14EJ
A14EK
A14EL
A14EM
A14EN
A14EP
A14EQ
A14ER
A14ES
A14ET
A14EU
A14EV
A14EW
A14EX
A14EY
A14EZ
A14FA
A14FB
A14FC
A14FD
A14FE
A14FF
A14FG
A14FH
A14FJ
A14FK
A14FL
A14FM
A14FN
A14FP
A14FQ
A14FR
A14FS
A14FT
A14FU
A14FV
A14FW
A14FX
A14FY
A14FZ
A14GA
A14GB
A14GC
A14GD
A14GE
A14GF
A14GG
A14GH
A14GJ
A14GK
A14GL
A14GM
A14GN
A14GP
A14GQ
A14GR
A14GS
A14GT
A14GU
A14GV
A14GW
A14GX
A14GY
A14GZ
A14HA
A14HB
A14HC
A14HD
A14HE
A14HF
A14HG
A14HH
A14HJ
A14HK
A14HL
A14HM
A14HN
A14HP
A14HQ
A14HR
A14HS
A14HT
A14HU
A14HV
A14HW
A14HX
A14HY
A14HZ
A14JA
A14JB
A14JC
A14JD
A14JE
A14JF
A14JG
A14JH
A14JJ
A14JK
A14JL
A14JM
A14JN
A14JP
A14JQ
A14JR
A14JS
A14JT
A14JU
A14JV
A14JW
A14JX
A14JY
A14JZ
A14KA
A14KB
A14KC
A14KD
A14KE
A14KF
A14KG
A14KH
A14KJ
A14KK
A14KL
A14KM
A14KN
A14KP
A14KQ
A14KR
A14KS
A14KT
A14KU
A14KV
A14KW
A14KX
A14KY
A14KZ
A14LA
A14LB
A14LC
A14LD
A14LE
A14LF
A14LG
A14LH
A14LJ
A14LK
A14LL
A14LM
A14LN
A14LP
A14LQ
A14LR
A14LS
A14LT
A14LU
A14LV
A14LW
A14LX
A14LY
A14LZ
A14MA
A14MB
A14MC
A14MD
A14ME
A14MF
A14MG
A14MH
A14MJ
A14MK
A14ML
A14MM
A14MN
A14MP
A14MQ
A14MR
A14MS
A14MT
A14MU
A14MV
A14MW
A14MX
A14MY
A14MZ
A14NA
A14NB
A14NC
A14ND
A14NE
A14NF
A14NG
A14NH
A14NJ
A14NK
A14NL
A14NM
A14NN
A14NP
A14NQ
A14NR
A14NS
A14NT
A14NU
A14NV
A14NW
A14NX
A14NY
A14NZ
A14PA
A14PB
A14PC
A14PD
A14PE
A14PF
A14PG
A14PH
A14PJ
A14PK
A14PL
A14PM
A14PN
A14PP
A14PQ
A14PR
A14PS
A14PT
A14PU
A14PV
A14PW
A14PX
A14PY
A14PZ
A14QA
A14QB
A14QC
A14QD
A14QE
A14QF
A14QG
A14QH
A14QJ
A14QK
A14QL
A14QM
A14QN
A14QP
A14QQ
A14QR
A14QS
A14QT
A14QU
A14QV
A14QW
A14QX
A14QY
A14QZ
A14RA
A14RB
A14RC
A14RD
A14RE
A14RF
A14RG
A14RH
A14RJ
A14RK
A14RL
A14RM
A14RN
A14RP
A14RQ
A14RR
A14RS
A14RT
A14RU
A14RV
A14RW
A14RX
A14RY
A14RZ
A14SA
A14SB
A14SC
A14SD
A14SE
A14SF
A14SG
A14SH
A14SJ
A14SK
A14SL
A14SM
A14SN
A14SP
A14SQ
A14SR
A14SS
A14ST
A14SU
A14SV
A14SW
A14SX
A14SY
A14SZ
A14TA
A14TB
A14TC
A14TD
A14TE
A14TF
A14TG
A14TH
A14TJ
A14TK
A14TL
A14TM
A14TN
A14TP
A14TQ
A14TR
A14TS
A14TT
A14TU
A14TV
A14TW
A14TX
A14TY
A14TZ
A14UA
A14UB
A14UC
A14UD
A14UE
A14UF
A14UG
A14UH
A14UJ
A14UK
A14UL
A14UM
A14UN
A14UP
A14UQ
A14UR
A14US
A14UT
A14UU
A14UV
A14UW
A14UX
A14UY
A14UZ
A14VA
A14VB
A14VC
A14VD
A14VE
A14VF
A14VG
A14VH
A14VJ
A14VK
A14VL
A14VM
A14VN
A14VP
A14VQ
A14VR
A14VS
A14VT
A14VU
A14VV
A14VW
A14VX
A14VY
A14VZ
A14WA
A14WB
A14WC
A14WD
A14WE
A14WF
A14WG
A14WH
A14WJ
A14WK
A14WL

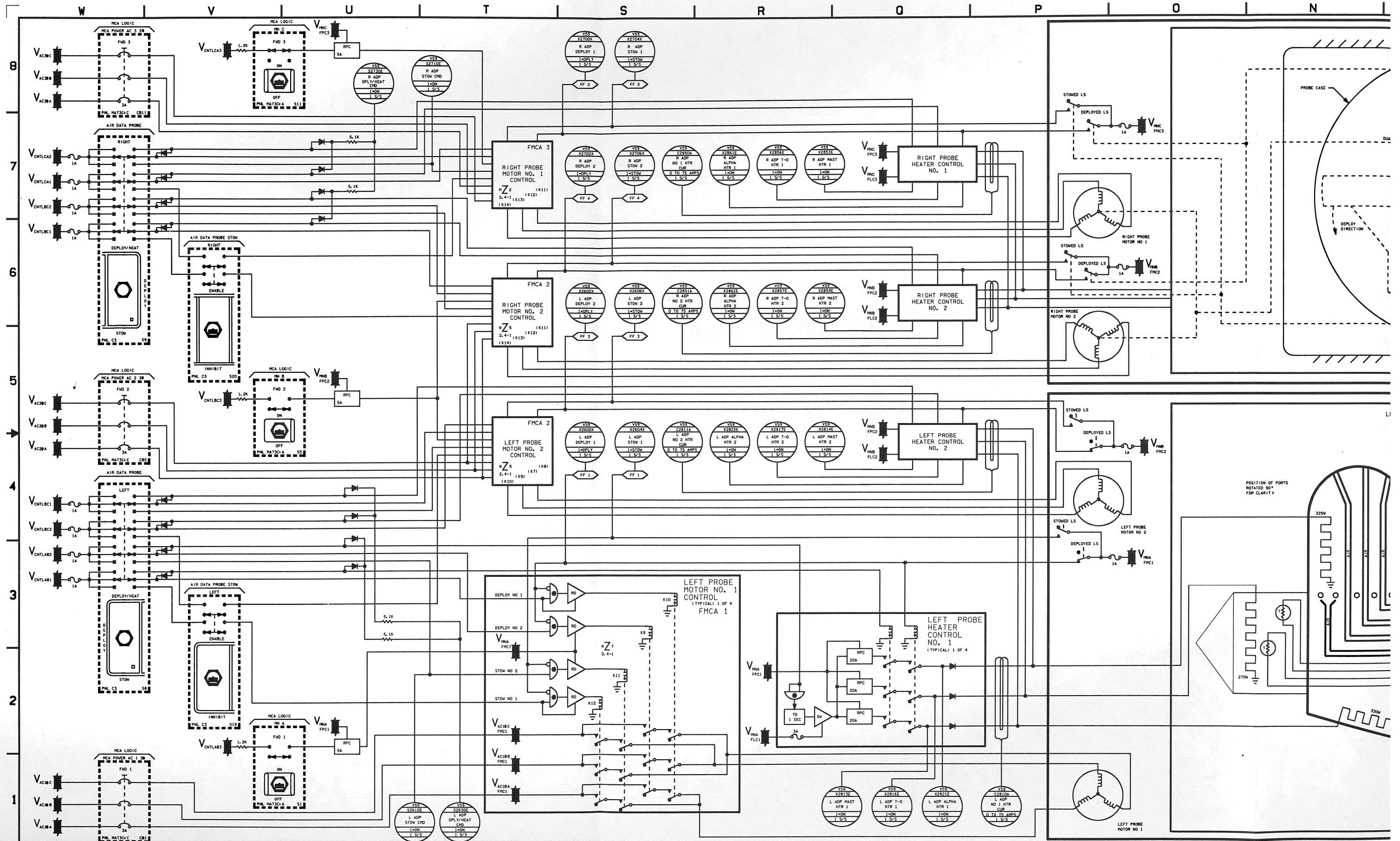

W
V
U
T
S
R
Q
P
O
N
8
7
6
5
4
3
2
1
MCA LOGIC
MCA POWER AC 3 30
FWD 3
AIR DATA PROBE
RIGHT
DEPLOY/HEAT
STOW
AIR DATA PROBE STOW
ENABLE
INHIBIT
MCA POWER AC 2 30
FWD 2
LEFT
MCA POWER AC 1 30
FWD 1
FMCA 3
RIGHT PROBE MOTOR NO. 1 CONTROL
FMCA 2
RIGHT PROBE MOTOR NO. 2 CONTROL
LEFT PROBE MOTOR NO. 2 CONTROL
RIGHT PROBE HEATER CONTROL NO. 1
RIGHT PROBE HEATER CONTROL NO. 2
LEFT PROBE HEATER CONTROL NO. 2
LEFT PROBE MOTOR NO. 1 CONTROL (TYPICAL) 1 OF 4 FMCA 1
LEFT PROBE HEATER CONTROL NO. 1 (TYPICAL) 1 OF 4
DEPLOY NO 1
DEPLOY NO 2
STOW NO 2
STOW NO 1
STOWED LS
DEPLOYED LS
RIGHT PROBE MOTOR NO 1
RIGHT PROBE MOTOR NO 2
LEFT PROBE MOTOR NO 2
LEFT PROBE MOTOR NO 1
PROBE CASE
DEPLOY DIRECTION
POSITION OF PORTS ROTATED 90° FOR CLARITY
325W
270W
330W
AIR

BASIC REV E-4

DATE: 09/11/90	NAME: MDU	VERSION# INK: 1
DATE: 10/10/91	NAME: LAM	VERSION# INK: 1
DATE: 10/23/91	NAME: LAM	VERSION# INK: 2

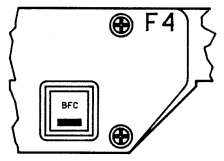

PNL F4

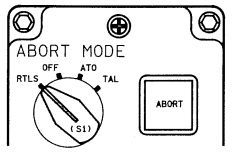

PNL F6

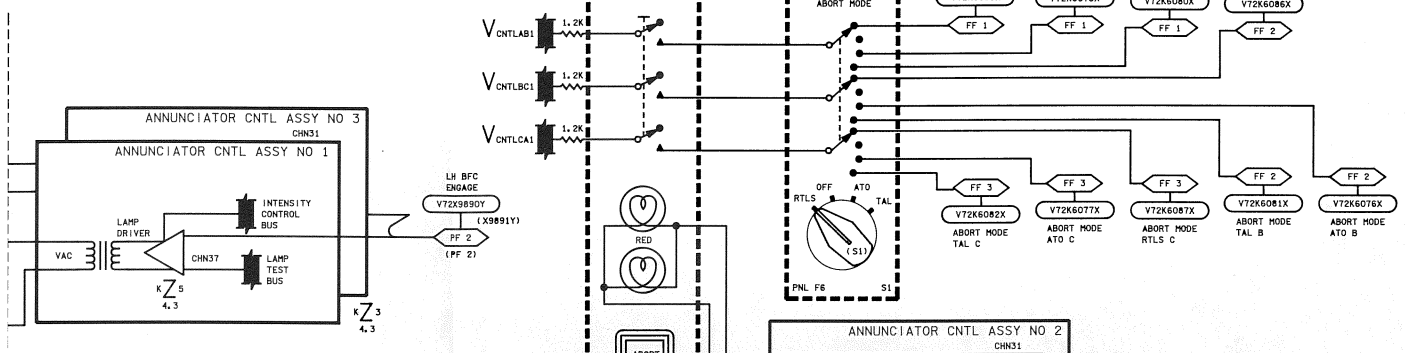

(TYPICAL 4 SWITCHES)

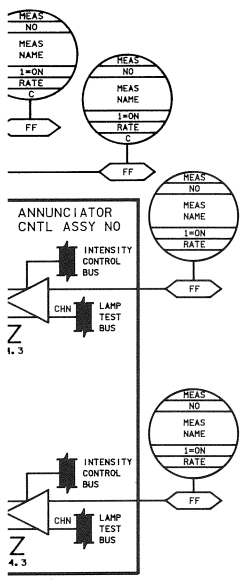

(TYPICAL 8 SWITCHES)

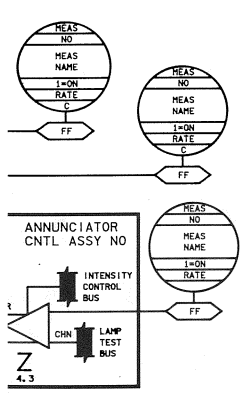

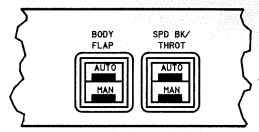

PNL F2

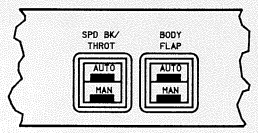

PNL F4

SWITCH NAME	PNL NO	SW NO	LIGHT LABEL	ANNUN CNTL Z 4.3	ASSY NO/ CHN	CON	V CNTL BUS	FF MDM	MEAS NO	MEAS NAME	MAX DWNLINK RATE
SPD BK/THROT	F2	S8	AUTO/MAN			1	AB1	1	V72K1570X	LH SPD BK/THROT A/M A	1 S/S
						2	BC1	2	V72K1571X	LH SPD BK/THROT A/M B	1 S/S
						3	CA1	3	V72K1572X	LH SPD BK/THROT A/M C	1 S/S
				K Z 5 4.3	1/25		---	1	V72X5136X	LH SPD BK AUTO LT	1 S/S
					1/27		---	2	V72X5137X	LH SPD BK MAN LT	1 S/S
BODY FLAP	F2	S9	AUTO/MAN			1	AB1	1	V72K4993X	LH BODY FLAP A/M A	1 S/S
						2	BC1	2	V72K4994X	LH BODY FLAP A/M B	1 S/S
						3	CA1	3	V72K4995X	LH BODY FLAP A/M C	1 S/S
				K Z 5 4.3	1/29		---	1	V72X4996X	LH BODY FLAP AUTO LT	1 S/S
					1/11		---	2	V72X4997X	LH BODY FLAP MAN LT	1 S/S

SWITCH NAME	PNL NO	SW NO	LIGHT LABEL	ANNUN CNTL Z 4.3	ASSY NO/ CHN	CON	V CNTL BUS	FF MDM	MEAS NO	MEAS NAME	MAX DWNLINK RATE
SPD BK/THROT	F4	S8	AUTO/MAN			1	BC2	2	V72K1600X	RH SPD BK/THROT A/M A	1 S/S
						2	CA2	3	V72K1601X	RH SPD BK/THROT A/M B	1 S/S
						3	BC3	4	V72K1602X	RH SPD BK/THROT A/M C	1 S/S
				K Z 4 4.3	2/26		---	3	V72X5134X	RH SPD BK AUTO LT	1 S/S
					2/28		---	4	V72X5135X	RH SPD BK MAN LT	1 S/S
BODY FLAP	F4	S9	AUTO/MAN			1	BC2	2	V72K4893X	RH BODY FLAP A/M A	1 S/S
						2	CA2	3	V72K4894X	RH BODY FLAP A/M B	1 S/S
						3	BC3	4	V72K4895X	RH BODY FLAP A/M C	1 S/S
				K Z 4 4.3	2/30		---	3	V72X4896X	RH BODY FLAP AUTO LT	1 S/S
					2/34		---	4	V72X4897X	RH BODY FLAP MAN LT	1 S/S

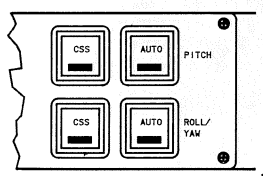

PNL F2

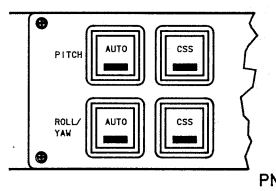

PNL F4

SWITCH NAME	PNL NO	SW NO	LIGHT LABEL	ANNUN CNTL Z 4.3	ASSY NO/ CHN	CON	V CNTL BUS	FF MDM	MEAS NO	MEAS NAME	MAX DWNLINK RATE
PITCH	F2	S2	AUTO			1	AB1	1	V72K5251X	LH PITCH AUTO MODE A	1 S/S
						2	BC1	2	V72K5252X	LH PITCH AUTO MODE B	1 S/S
						3	CA1	3	V72K5253X	LH PITCH AUTO MODE C	1 S/S
				K Z 5 4.3	1/13		---	1	V72X5240X	LH PITCH AUTO MODE LT	1 S/S
		S3	CSS			1	AB1	1	V72K5256X	LH PITCH CSS MODE A	1 S/S
						2	BC1	2	V72K5257X	LH PITCH CSS MODE B	1 S/S
						3	CA1	3	V72K5258X	LH PITCH CSS MODE C	1 S/S
					1/15		---	2	V72X5241X	LH PITCH CSS MODE LT	1 S/S
ROLL/YAW	F2	S5	AUTO			1	AB1	1	V72K5265X	LH R/Y AUTO MODE A	1 S/S
						2	BC1	2	V72K5266X	LH R/Y AUTO MODE B	1 S/S
						3	CA1	3	V72K5267X	LH R/Y AUTO MODE C	1 S/S
					1/19		---	1	V72X5243X	LH R/Y AUTO MODE LT	1 S/S
		S6	CSS			1	AB1	1	V72K5270X	LH R/Y CSS MODE A	1 S/S
						2	BC1	2	V72K5271X	LH R/Y CSS MODE B	1 S/S
						3	CA1	3	V72K5272X	LH R/Y CSS MODE C	1 S/S
					1/21		---	2	V72X5245X	LH R/Y CSS MODE LT	1 S/S

SWITCH NAME	PNL NO	SW NO	LIGHT LABEL	ANNUN CNTL Z 4.3	ASSY NO/ CHN	CON	V CNTL BUS	FF MDM	MEAS NO	MEAS NAME	MAX DWNLINK RATE
PITCH	F4	S2	AUTO			1	BC2	2	V72K5151X	RH PITCH AUTO MODE A	1 S/S
						2	CA2	3	V72K5152X	RH PITCH AUTO MODE B	1 S/S
						3	BC3	4	V72K5153X	RH PITCH AUTO MODE C	1 S/S
				K Z 4 4.3	2/14		---	3	V72X5140X	RH PITCH AUTO MODE LT	1 S/S
		S3	CSS			1	BC2	2	V72K5156X	RH PITCH CSS MODE A	1 S/S
						2	CA2	3	V72K5157X	RH PITCH CSS MODE B	1 S/S
						3	BC3	4	V72K5158X	RH PITCH CSS MODE C	1 S/S
					2/16		---	4	V72X5141X	RH PITCH CSS MODE LT	1 S/S
ROLL/YAW	F4	S5	AUTO			1	BC2	2	V72K5165X	RH R/Y AUTO MODE A	1 S/S
						2	CA2	3	V72K5166X	RH R/Y AUTO MODE B	1 S/S
						3	BC3	4	V72K5167X	RH R/Y AUTO MODE C	1 S/S
					2/20		---	3	V72X5143X	RH R/Y AUTO MODE LT	1 S/S
		S6	CSS			1	BC2	2	V72K5170X	RH R/Y CSS MODE A	1 S/S
						2	CA2	3	V72K5171X	RH R/Y CSS MODE B	1 S/S
						3	BC3	4	V72K5172X	RH R/Y CSS MODE C	1 S/S
				K Z 4 4.3	2/22		---	4	V72X5145X	RH R/Y CSS MODE LT	1 S/S

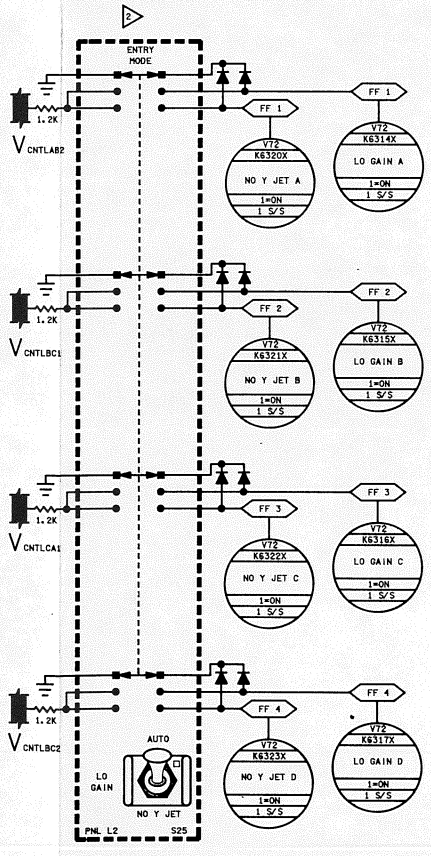

ENTRY MODE SWITCH SELECTION FILTER PROCESSING

THIS MATRIX SHOWS RM OUTPUT FOR THE VARIOUS STATE OF CONTACTS OF THE ENTRY MODE SWITCH. IF THE ENTRY_SW_OVERRIDE SIGNAL IS = +1, (ITEM 42, AUTO SEL ON SPEC 51 OVERRIDE DISPLAY), THE OUTPUT IS THE SAME AS IF THE CONTACT STATE WERE O/O.

NO OF AVAILABLE CONTACTS ENERGIZED (+1)	LOW GAIN 0	LOW GAIN 1	LOW GAIN 2	LOW GAIN 3	LOW GAIN 4
0	SEL L GAIN = O* SEL NO Y JET = O ENT SW FAIL = O	SEL L GAIN = O* SEL NO Y JET = O ENT SW FAIL = O	SEL L GAIN = 1 SEL NO Y JET = O ENT SW FAIL = 1	SEL L GAIN = 1 SEL NO Y JET = O ENT SW FAIL = 1	SEL L GAIN = 1 SEL NO Y JET = O ENT SW FAIL = 1
1	SEL L GAIN = O* SEL NO Y JET = O ENT SW FAIL = O	SEL L GAIN = O SEL NO Y JET = O ENT SW FAIL = 1	SEL L GAIN = O SEL NO Y JET = O ENT SW FAIL = 1	SEL L GAIN = 1 SEL NO Y JET = O ENT SW FAIL = 1	SEL L GAIN = 1 SEL NO Y JET = O ENT SW FAIL = 1
2	SEL L GAIN = O SEL NO Y JET = 1 ENT SW FAIL = 1	SEL L GAIN = O SEL NO Y JET = O ENT SW FAIL = 1	SEL L GAIN = O SEL NO Y JET = O ENT SW FAIL = 1	SEL L GAIN = 1 SEL NO Y JET = O ENT SW FAIL = 1	SEL L GAIN = 1 SEL NO Y JET = O ENT SW FAIL = 1
3	SEL L GAIN = O SEL NO Y JET = 1 ENT SW FAIL = 1	SEL L GAIN = O SEL NO Y JET = 1 ENT SW FAIL = 1	SEL L GAIN = O SEL NO Y JET = 1 ENT SW FAIL = 1	SEL L GAIN = O SEL NO Y JET = O ENT SW FAIL = 1	SEL L GAIN = 1 SEL NO Y JET = O ENT SW FAIL = 1
4	SEL L GAIN = O SEL NO Y JET = 1 ENT SW FAIL = O	SEL L GAIN = O SEL NO Y JET = 1 ENT SW FAIL = 1	SEL L GAIN = O SEL NO Y JET = 1 ENT SW FAIL = 1	SEL L GAIN = O SEL NO Y JET = 1 ENT SW FAIL = 1	SEL L GAIN = O SEL NO Y JET = O ENT SW FAIL = 1

NO Y JET

*FDIR SHALL OPERATE IN THIS STATE IF SEVEN OR MORE CONTACTS ARE AVAILABLE

- FDIR FOR FOUR-CONTACT SWITCHES SHALL CONSIDER ALL THE CONTACTS AVAILABLE FOR FDIR TO BE A REDUNDANT SET. FDIR SHALL TERMINATE IF LESS THAN SEVEN OF THE EIGHT CONTACTS ARE AVAILABLE, OR IF MORE THAN ONE CONTACT IS IN THE (+1) STATE. WHEN FDIR RUNS, A SINGLE CONTACT IN THE (+1) STATE WHILE ALL OTHER CONTACTS ARE IN THE ZERO STATE SHALL BE DECLARED FAILED IF THE CONDITION PERSISTS FOR THREE CONSECUTIVE CYCLES
- GAX MSG "G51 RL MODE SW" WILL APPEAR WHEN ENT SW FAIL = 1

NOTES: ▷ THE DATA IN THE TABLES REFER TO THE ASSOCIATED TYPICAL SWITCH CIRCUIT

10 FCS SW

SIGNATURE		DATE	NATIONAL AERONAUTICS AND SPACE ADMINISTRATION LYNDON B. JOHNSON SPACE CENTER HOUSTON, TEXAS
DSGN	MIKE BECKER	4-29-79	
DR			FCS MODE SWITCHES
ENGR	B. J. SCHOENBAUER		
ENGR		10-24-91	
APE		10/24/91	
MA		10/24/91	SPACE SHUTTLE
CRWT	PLAN	10-24-91	ALL
LTR	E	PCN 1	104.5 X 34

DWG NO 9.10

PAGE SHEET 1 OF 1

BASIC REV E-1

DATE: 10/23/91 | NAME: LAM | VERSION: INK,2

(TYPICAL 12 SWITCHES)

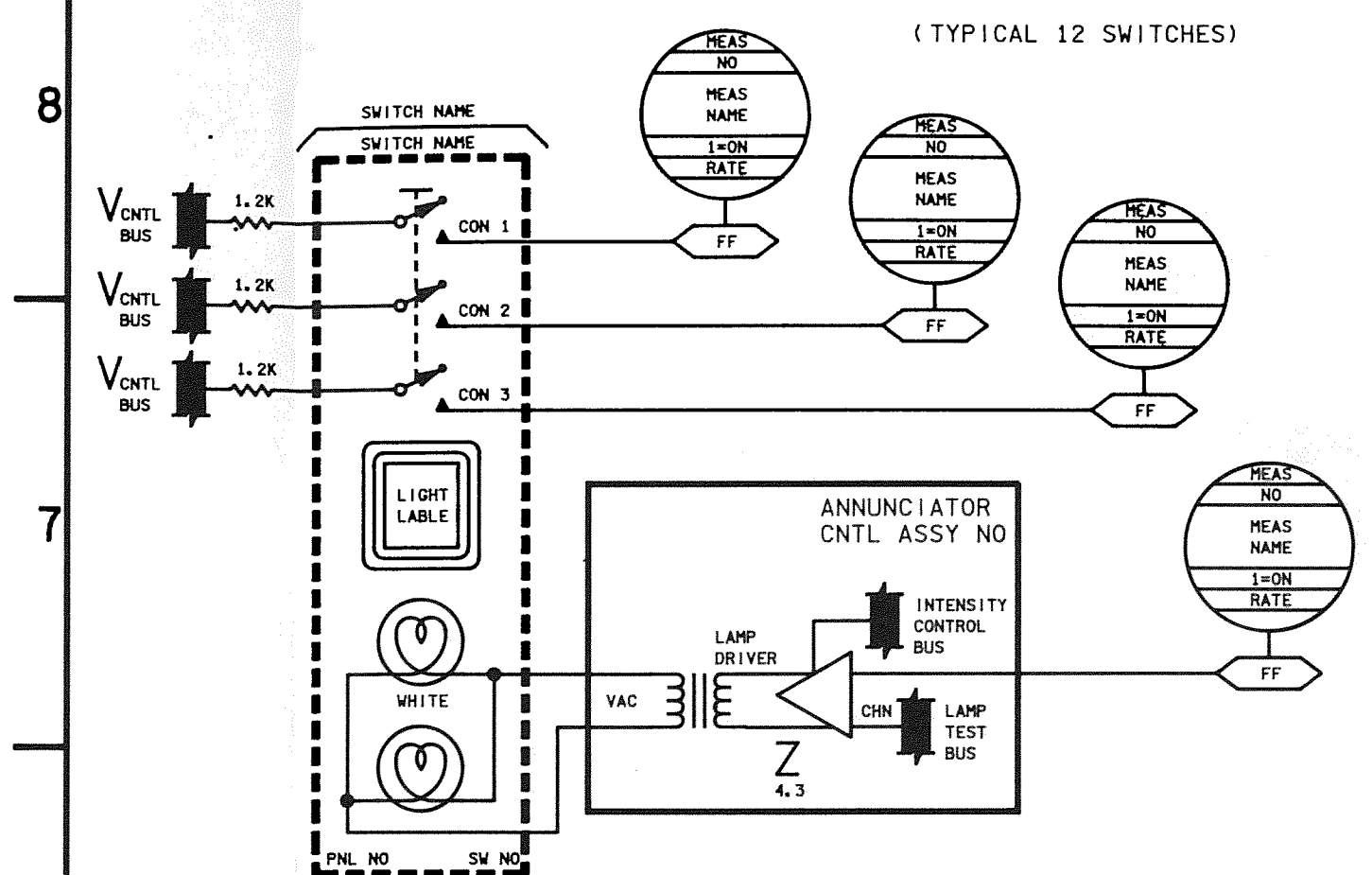

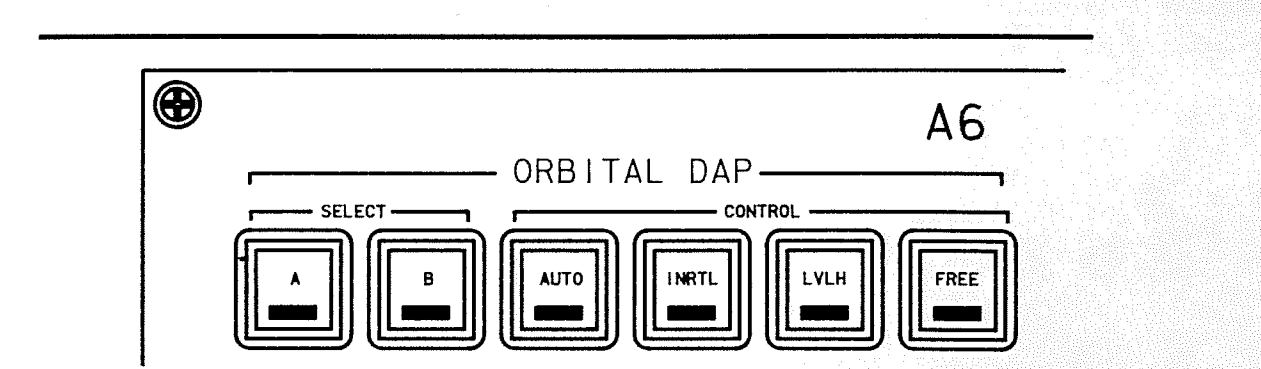

PNL A6

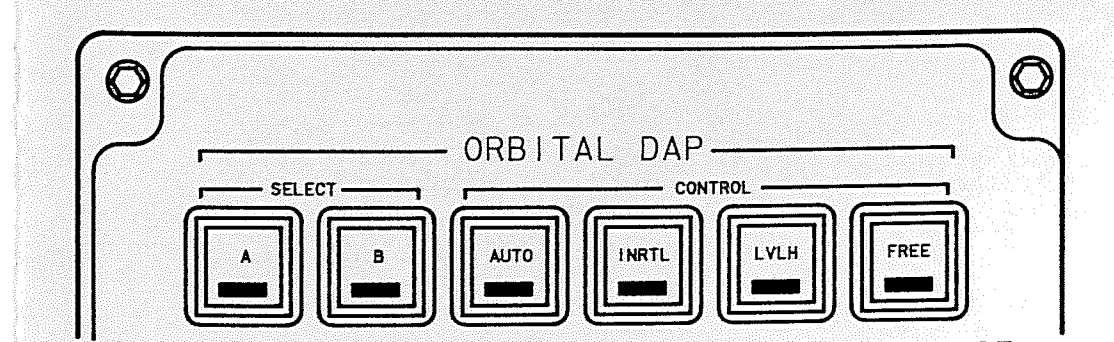

PNL C3

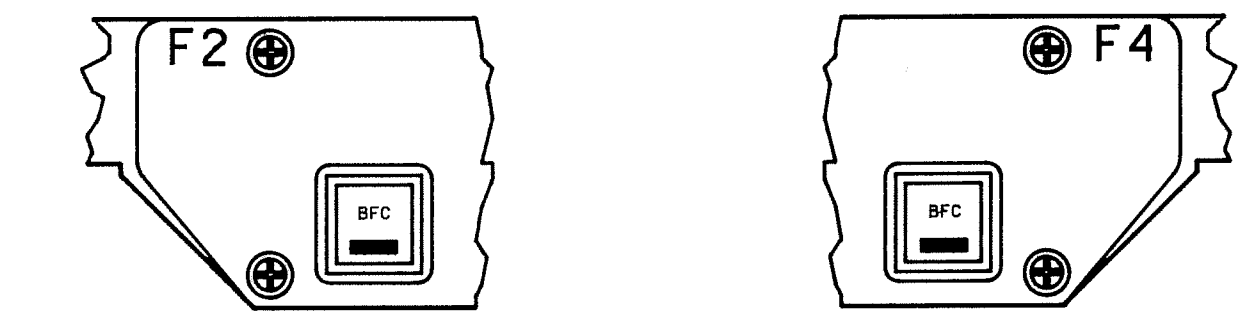

PNL F2 PNL F4

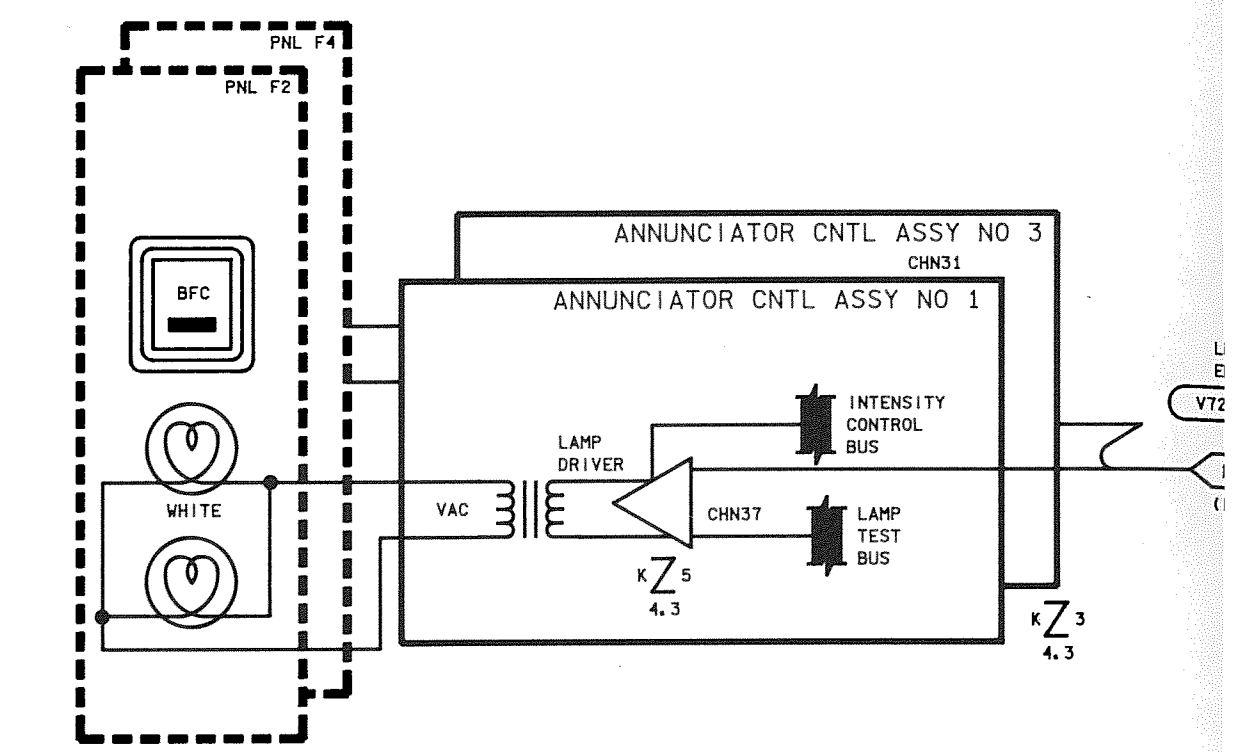

⚠1

SWITCH NAME	PNL NO	SW NO	LIGHT LABEL	ANNUN CNTL Z 4.3	ASSY NO/CHN	CON	V CNTL BUS	FF MDM	MEAS NO	MEAS NAME	MAX DWNLINK RATE
ORBITAL DAP, SELECT	A6	S8	A	K Z 2 4.3	4/1	1	CA2	3	V72K6430X	AFT DAP SELECT A-A	12.5 S/S
						2	BC2	4	V72K6431X	AFT DAP SELECT A-B	12.5 S/S
						3	AB2	1	V72K6419X	AFT DAP SELECT A-C	12.5 S/S
							----	3	V72X6421X	AFT DAP SELECT A LT	------
		S9	B	K Z 2 4.3	4/3	1	CA2	3	V72K6432X	AFT DAP SELECT B-A	12.5 S/S
						2	BC2	4	V72K6433X	AFT DAP SELECT B-B	12.5 S/S
						3	AB2	1	V72K6420X	AFT DAP SELECT B-C	12.5 S/S
							----	3	V72X6422X	AFT DAP SELECT B LT	------
ORBITAL DAP, CONTROL	A6	S10	AUTO	K Z 2 4.3	4/5	1	CA2	3	V72K6490X	AFT DAP AUTO A	12.5 S/S
						2	BC2	4	V72K6491X	AFT DAP AUTO B	12.5 S/S
						3	AB2	1	V72K6492X	AFT DAP AUTO C	12.5 S/S
							----	3	V72X6498X	AFT DAP AUTO LT	------
		S11	INRTL	K Z 1 4.3	5/1	1	CA2	3	V72K6495X	AFT DAP MAN INRTL A	12.5 S/S
						2	BC2	4	V72K6496X	AFT DAP MAN INRTL B	12.5 S/S
						3	AB2	1	V72K6497X	AFT DAP MAN INRTL C	12.5 S/S
							----	3	V72X6499X	AFT DAP MAN INRTL LT	------
		S12	LVLH	K Z 1 4.3	5/3	1	CA2	3	V72K6517X	AFT DAP MAN LVLH A	1 S/S
						2	BC2	4	V72K6518X	AFT DAP MAN LVLH B	1 S/S
						3	AB2	1	V72K6415C	AFT DAP MAN LVLH C	1 S/S
							----	3	V72X6542X	AFT DAP MAN LVLH LT	------
		S13	FREE	K Z 1 4.3	5/5	1	CA2	3	V72K6412X	AFT DAP MAN FREE DFT A	1 S/S
						2	BC2	4	V72K6413X	AFT DAP MAN FREE DFT B	1 S/S
						3	AB2	1	V72K6414X	AFT DAP MAN FREE DFT C	1 S/S
							----	3	V72X6417X	AFT DAP MAN FREE DFT LT	------

⚠1

SWITCH NAME	PNL NO	SW NO	LIGHT LABEL	ANNUN CNTL Z 4.3	ASSY NO/CHN	CON	V CNTL BUS	FF MDM	MEAS NO	MEAS NAME	MAX DWNLINK RATE
ORBITAL DAP, SELECT	C3	S1	A	K Z 3 4.3	3/2	1	AB3	1	V72K2801X	FWD DAP SELECT A-A	12.5 S/S
						2	BC3	2	V72K2802X	FWD DAP SELECT A-B	12.5 S/S
						3	CA3	3	V72K2805X	FWD DAP SELECT A-C	12.5 S/S
							----	1	V72X2807X	FWD DAP SELECT A LT	5 S/S
		S2	B	K Z 3 4.3	3/4	1	AB3	1	V72K2803X	FWD DAP SELECT B-A	12.5 S/S
						2	BC3	2	V72K2804X	FWD DAP SELECT B-B	12.5 S/S
						3	CA3	3	V72K2806X	FWD DAP SELECT B-C	12.5 S/S
							----	1	V72X2808X	FWD DAP SELECT B LT	1 S/S
ORBITAL DAP, CONTROL	C3	S3	AUTO	K Z 3 4.3	3/6	1	AB3	1	V72K2840X	FWD DAP AUTO A	12.5 S/S
						2	BC3	2	V72K2841X	FWD DAP AUTO B	12.5 S/S
						3	CA3	3	V72K2842X	FWD DAP AUTO C	12.5 S/S
							----	1	V72X2850X	FWD DAP AUTO LT	5 S/S
		S4	INRTL	K Z 5 4.3	3/2	1	AB3	1	V72K2845X	FWD DAP MAN INRTL A	12.5 S/S
						2	BC3	2	V72K2846X	FWD DAP MAN INRTL B	12.5 S/S
						3	CA3	3	V72K2847X	FWD DAP MAN INRTL C	12.5 S/S
							----	1	V72X2849X	FWD DAP MAN INRTL LT	1 S/S
		S5	LVLH	K Z 5 4.3	1/2	1	AB3	1	V72K2864X	FWD RCS MAN LVLH A	1 S/S
						2	BC3	2	V72K2865X	FWD RCS MAN LVLH B	1 S/S
						3	CA3	3	V72K2895X	FWD RCS MAN LVLH C	1 S/S
							----	1	V72X2868X	FWD RCS MAN LVLH LT	5 S/S
		S6	FREE	K Z 5 4.3	1/2	1	AB3	1	V72K2892X	FWD RCS MAN FREE DFT A	1 S/S
						2	BC3	2	V72K2893X	FWD RCS MAN FREE DFT B	1 S/S
						3	CA3	3	V72K2894X	FWD RCS MAN FREE DFT C	1 S/S
							----	1	V72X2897X	FWD RCS MAN FREE DFT LT	1 S/S

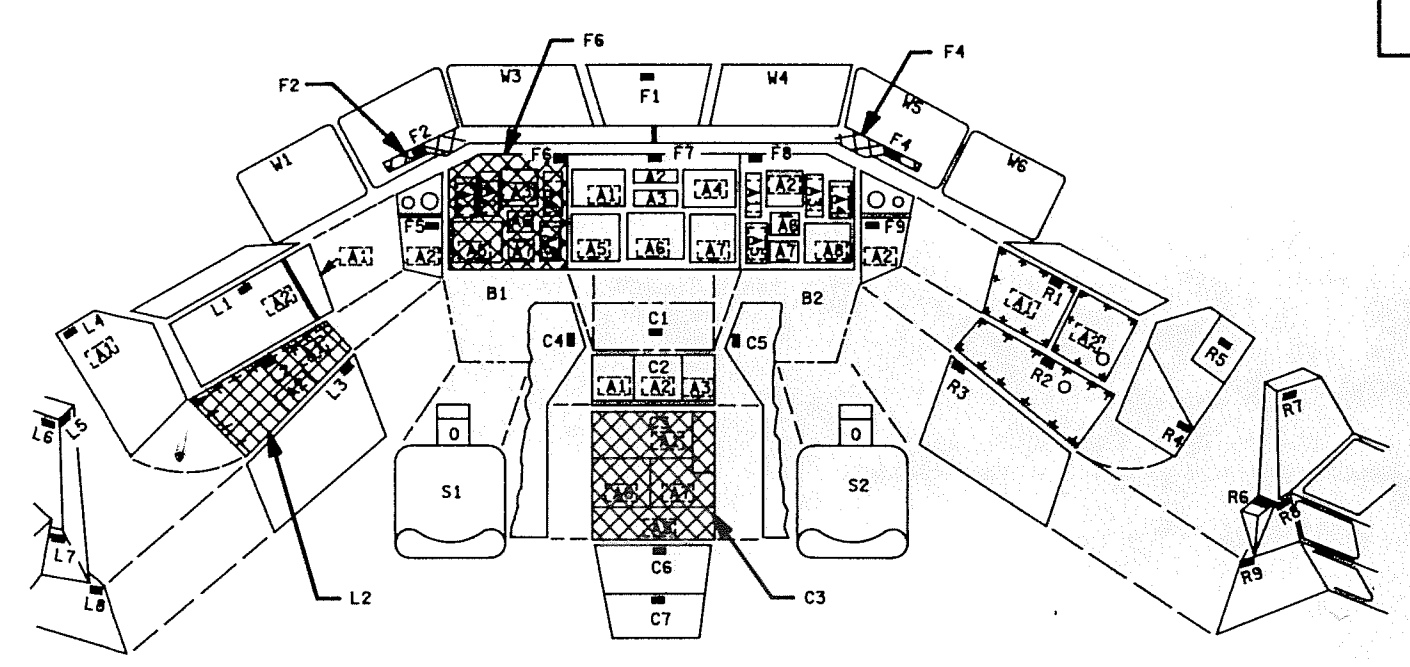

FLIGHT STATION

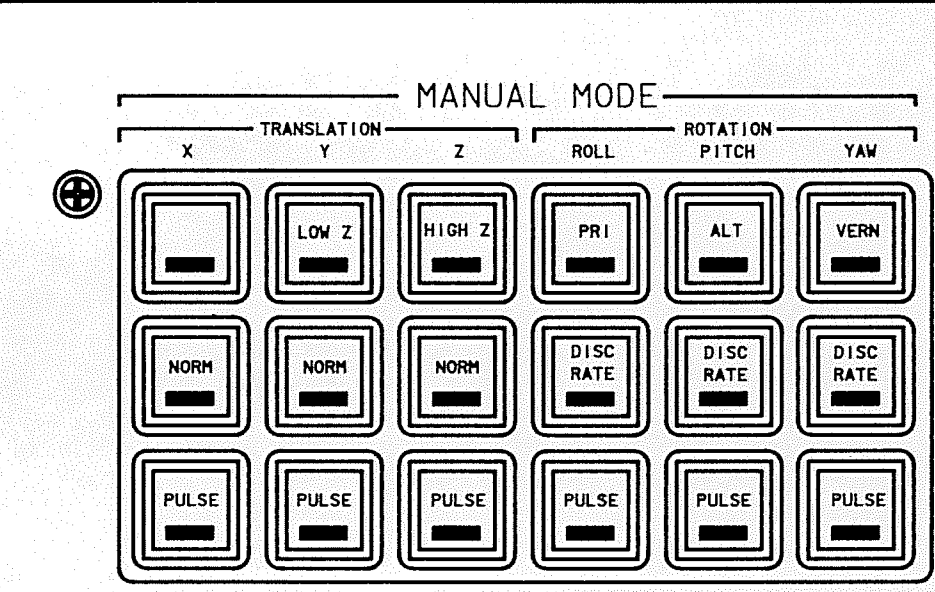

PNL A6

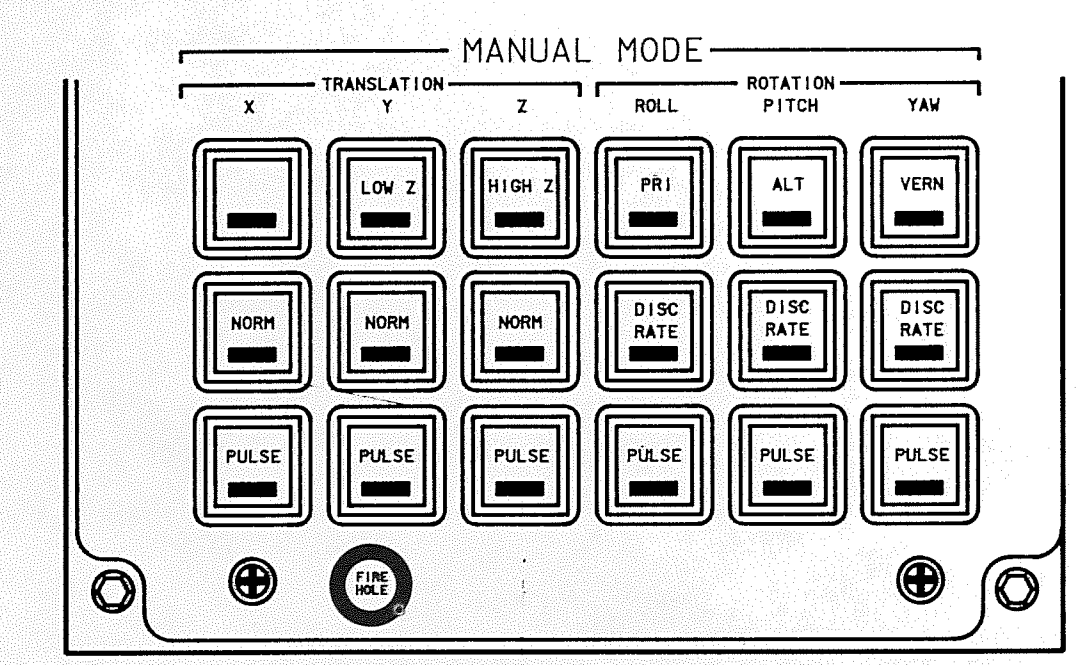

PNL C3

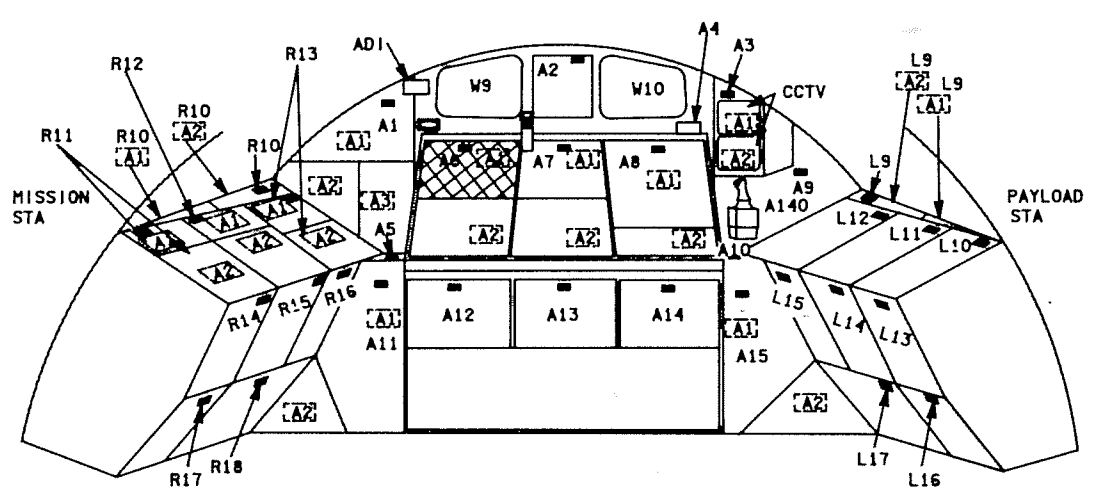

AFT STATION

⚠1

SWITCH NAME	PNL NO	SW NO	LIGHT LABEL	ANNUN CNTL Z 4.3	ASSY NO/CHN	CON	V CNTL BUS	FF MDM	MEAS NO	MEAS NAME	MAX DWNLINK RATE
MANUAL MODE, TRANSLATION, X	A6	S14	(BLANK)	K Z 2 4.3	4/9	1	CA2	3	------	------	------
						2	BC2	4	------	------	------
							----	3	------	------	------
		S20	NORM		4/17	1	CA2	3	V72K6510X	AFT TRANSL X NORM A	1 S/S
						2	BC2	4	V72K6511X	AFT TRANSL X NORM B	1 S/S
							----	3	V72X6540X	AFT TRANSL X NORM LT	------
		S26	PULSE		4/25	1	CA2	3	V72K6513X	AFT TRANSL X PULSE A	1 S/S
						2	BC2	4	V72K6514X	AFT TRANSL X PULSE B	1 S/S
							----	3	V72X6541X	AFT TRANSL X PULSE LT	------
MANUAL MODE, TRANSLATION, Y	A6	S15	LOW Z		4/11	1	CA2	3	V72K6527X	AFT TRANSL LOW Z A	1 S/S
						2	BC2	4	V72K6528X	AFT TRANSL LOW Z B	1 S/S
							----	3	V72X6545X	AFT TRANSL LOW Z LT	------
		S21	NORM		4/19	1	CA2	3	V72K6520X	AFT TRANSL Y NORM A	1 S/S
						2	BC2	4	V72K6521X	AFT TRANSL Y NORM B	1 S/S
							----	3	V72X6543X	AFT TRANSL Y NORM LT	------
		S27	PULSE		4/27	1	CA2	3	V72K6523X	AFT TRANSL Y PULSE A	1 S/S
						2	BC2	4	V72K6524X	AFT TRANSL Y PULSE B	1 S/S
							----	3	V72X6544X	AFT TRANSL Y PULSE LT	------
MANUAL MODE, TRANSLATION, Z	A6	S16	HIGH Z		4/13	1	CA2	3	V72K6537X	AFT TRANSL Z HIGH A	1 S/S
						2	BC2	4	V72K6538X	AFT TRANSL Z HIGH B	1 S/S
							----	3	V72X6548X	AFT TRANSL Z HIGH LT	------
		S22	NORM		4/21	1	CA2	3	V72K6530X	AFT TRANSL Z NORM A	1 S/S
						2	BC2	4	V72K6531X	AFT TRANSL Z NORM B	1 S/S
							----	3	V72X6546X	AFT TRANSL Z NORM LT	------
		S28	PULSE	K Z 2 4.3	4/29	1	CA2	3	V72K6533X	AFT TRANSL Z PULSE A	1 S/S
						2	BC2	4	V72K6534X	AFT TRANSL Z PULSE B	1 S/S
							----	3	V72X6547X	AFT TRANSL Z PULSE LT	------
MANUAL MODE, ROTATION, ROLL	A6	S17	PRI	K Z 1 4.3	5/9	1	CA2	3	V72K6505X	AFT RCS JETS NORM A	1 S/S
						2	BC2	4	V72K6506X	AFT RCS JETS NORM B	1 S/S
							----	3	V72X6502X	AFT RCS JETS NORM LT	------
		S23	DISC RATE		5/17	1	CA2	3	V72K6440X	AFT ROT ROLL DISC A	1 S/S
						2	BC2	4	V72K6441X	AFT ROT ROLL DISC B	1 S/S
							----	3	V72X6450X	AFT ROT ROLL DISC LT	------
		S29	PULSE		5/25	1	CA2	3	V72K6448X	AFT ROT ROLL PULSE A	1 S/S
						2	BC2	4	V72K6449X	AFT ROT ROLL PULSE B	1 S/S
							----	3	V72X6452X	AFT ROT ROLL PULSE LT	------
MANUAL MODE, ROTATION, PITCH	A6	S18	ALT		5/11	1	CA2	3	V72K6410X	AFT ALT PRCS MODE A	1 S/S
						2	BC2	4	V72K6411X	AFT ALT PRCS MODE B	1 S/S
							----	3	V72X6416X	AFT ALT PRCS MODE LT	------
		S24	DISC RATE		5/19	1	CA2	3	V72K6460X	AFT ROT PITCH DISC A	1 S/S
						2	BC2	4	V72K6461X	AFT ROT PITCH DISC B	1 S/S
							----	3	V72X6470X	AFT ROT PITCH DISC LT	------
		S30	PULSE		5/27	1	CA2	3	V72K6468X	AFT ROT PITCH PULSE A	1 S/S
						2	BC2	4	V72K6469X	AFT ROT PITCH PULSE B	1 S/S
							----	3	V72X6472X	AFT ROT PITCH PULSE LT	------
MANUAL MODE, ROTATION, YAW	A6	S19	VERN		5/13	1	CA2	3	V72K6507X	AFT RCS JETS VERN A	1 S/S
						2	BC2	4	V72K6508X	AFT RCS JETS VERN B	1 S/S
							----	3	V72X6503X	AFT RCS JETS VERN LT	------
		S25	DISC RATE		5/21	1	CA2	3	V72K6480X	AFT ROT YAW DISC A	1 S/S
						2	BC2	4	V72K6481X	AFT ROT YAW DISC B	1 S/S
							----	3	V72X6473X	AFT ROT YAW DISC LT	------
		S31	PULSE	K Z 1 4.3	5/29	1	CA2	3	V72K6488X	AFT ROT YAW PULSE A	1 S/S
						2	BC2	4	V72K6489X	AFT ROT YAW PULSE B	1 S/S
							----	3	V72X6475X	AFT ROT YAW PULSE LT	------

⚠1

SWITCH NAME	PNL NO	SW NO	LIGHT LABEL	ANNUN CNTL Z 4.3	ASSY NO/CHN	CON	V CNTL BUS	FF MDM	MEAS NO	MEAS NAME	MAX DWNLINK RATE
MANUAL MODE, TRANSLATION, X	C3	S16	(BLANK)	K Z 3 4.3	3/10	1	AB3	1	------	------	------
						2	BC3	2	------	------	------
							----	1	------	------	------
		S19	NORM		3/18	1	AB3	1	V72K2860X	FWD TRANSL X NORM A	1 S/S
						2	BC3	2	V72K2861X	FWD TRANSL X NORM B	1 S/S
							----	1	V72X2866X	FWD TRANSL X NORM LT	1 S/S
		S22	PULSE		3/26	1	AB3	1	V72K2862X	FWD TRANSL X PULSE A	1 S/S
						2	BC3	2	V72K2863X	FWD TRANSL X PULSE B	1 S/S
							----	1	V72X2867X	FWD TRANSL X PULSE LT	1 S/S
MANUAL MODE, TRANSLATION, Y	C3	S17	LOW Z		3/12	1	AB3	1	V72K2874X	FWD TRANSL LOW Z A	1 S/S
						2	BC3	2	V72K2875X	FWD TRANSL LOW Z B	1 S/S
							----	1	V72X2878X	FWD TRANSL LOW Z LT	1 S/S
		S20	NORM		3/20	1	AB3	1	V72K2870X	FWD TRANSL Y NORM A	1 S/S
						2	BC3	2	V72K2871X	FWD TRANSL Y NORM B	1 S/S
							----	1	V72X2876X	FWD TRANSL Y NORM LT	1 S/S
		S23	PULSE		3/28	1	AB3	1	V72K2872X	FWD TRANSL Y PULSE A	1 S/S
						2	BC3	2	V72K2873X	FWD TRANSL Y PULSE B	1 S/S
							----	1	V72X2877X	FWD TRANSL Y PULSE LT	1 S/S
MANUAL MODE, TRANSLATION, Z	C3	S18	HIGH Z		3/14	1	AB3	1	V72K2884X	FWD TRANSL Z HIGH A	1 S/S
						2	BC3	2	V72K2885X	FWD TRANSL Z HIGH B	1 S/S
							----	1	V72X2888X	FWD TRANSL Z HIGH LT	1 S/S
		S21	NORM		3/22	1	AB3	1	V72K2880X	FWD TRANSL Z NORM A	1 S/S
						2	BC3	2	V72K2881X	FWD TRANSL Z NORM B	1 S/S
							----	1	V72X2886X	FWD TRANSL Z NORM LT	1 S/S
		S24	PULSE		3/30	1	AB3	1	V72K2882X	FWD TRANSL Z PULSE A	1 S/S
						2	BC3	2	V72K2883X	FWD TRANSL Z PULSE B	1 S/S
							----	1	V72X2887X	FWD TRANSL Z PULSE LT	1 S/S
MANUAL MODE, ROTATION, ROLL	C3	S7	PRI		1/10	1	AB3	1	V72K2851X	FWD RCS JETS NORM A	1 S/S
						2	BC3	2	V72K2852X	FWD RCS JETS NORM B	1 S/S
							----	1	V72X2855X	FWD RCS JETS NORM LT	1 S/S
		S10	DISC RATE		1/18	1	AB3	1	V72K2812X	FWD ROT ROLL DISC A	1 S/S
						2	BC3	2	V72K2813X	FWD ROT ROLL DISC B	1 S/S
							----	1	V72X2790X	FWD ROT ROLL DISC LT	1 S/S
		S13	PULSE	K Z 3 4.3	1/26	1	AB3	1	V72K2816X	FWD ROT ROLL PULSE A	1 S/S
						2	BC3	2	V72K2817X	FWD ROT ROLL PULSE B	1 S/S
							----	1	V72X2792X	FWD ROT ROLL PULSE LT	1 S/S
MANUAL MODE, ROTATION, PITCH	C3	S8	ALT	K Z 5 4.3	1/12	1	AB3	1	V72K2890X	FWD ALT PRCS MODE A	1 S/S
						2	BC3	2	V72K2891X	FWD ALT PRCS MODE B	1 S/S
							----	1	V72X2896X	FWD ALT PRCS MODE LT	1 S/S
		S11	DISC RATE		1/20	1	AB3	1	V72K2822X	FWD ROT PITCH DISC A	1 S/S
						2	BC3	2	V72K2823X	FWD ROT PITCH DISC B	1 S/S
							----	1	V72X2793X	FWD ROT PITCH DISC LT	1 S/S
		S14	PULSE		1/28	1	AB3	1	V72K2826X	FWD ROT PITCH PULSE A	1 S/S
						2	BC3	2	V72K2827X	FWD ROT PITCH PULSE B	1 S/S
							----	1	V72X2795X	FWD ROT PITCH PULSE LT	1 S/S
MANUAL MODE, ROTATION, YAW	C3	S9	VERN		1/14	1	AB3	1	V72K2853X	FWD RCS JETS VERN LT A	1 S/S
						2	BC3	2	V72K2854X	FWD RCS JETS VERN LT B	1 S/S
							----	1	V72X2856X	FWD RCS JETS VERN LT LT	1 S/S
		S12	DISC RATE		1/22	1	AB3	1	V72K2832X	FWD ROT YAW DISC A	1 S/S
						2	BC3	2	V72K2833X	FWD ROT YAW DISC B	1 S/S
							----	1	V72X2796X	FWD ROT YAW DISC LT	1 S/S
		S15	PULSE	K Z 5 4.3	1/30	1	AB3	1	V72K2836X	FWD ROT YAW PULSE A	1 S/S
						2	BC3	2	V72K2837X	FWD ROT YAW PULSE B	1 S/S
							----	1	V72X2798X	FWD ROT YAW PULSE LT	1 S/S

(TYPICAL 4 SWITCHES)

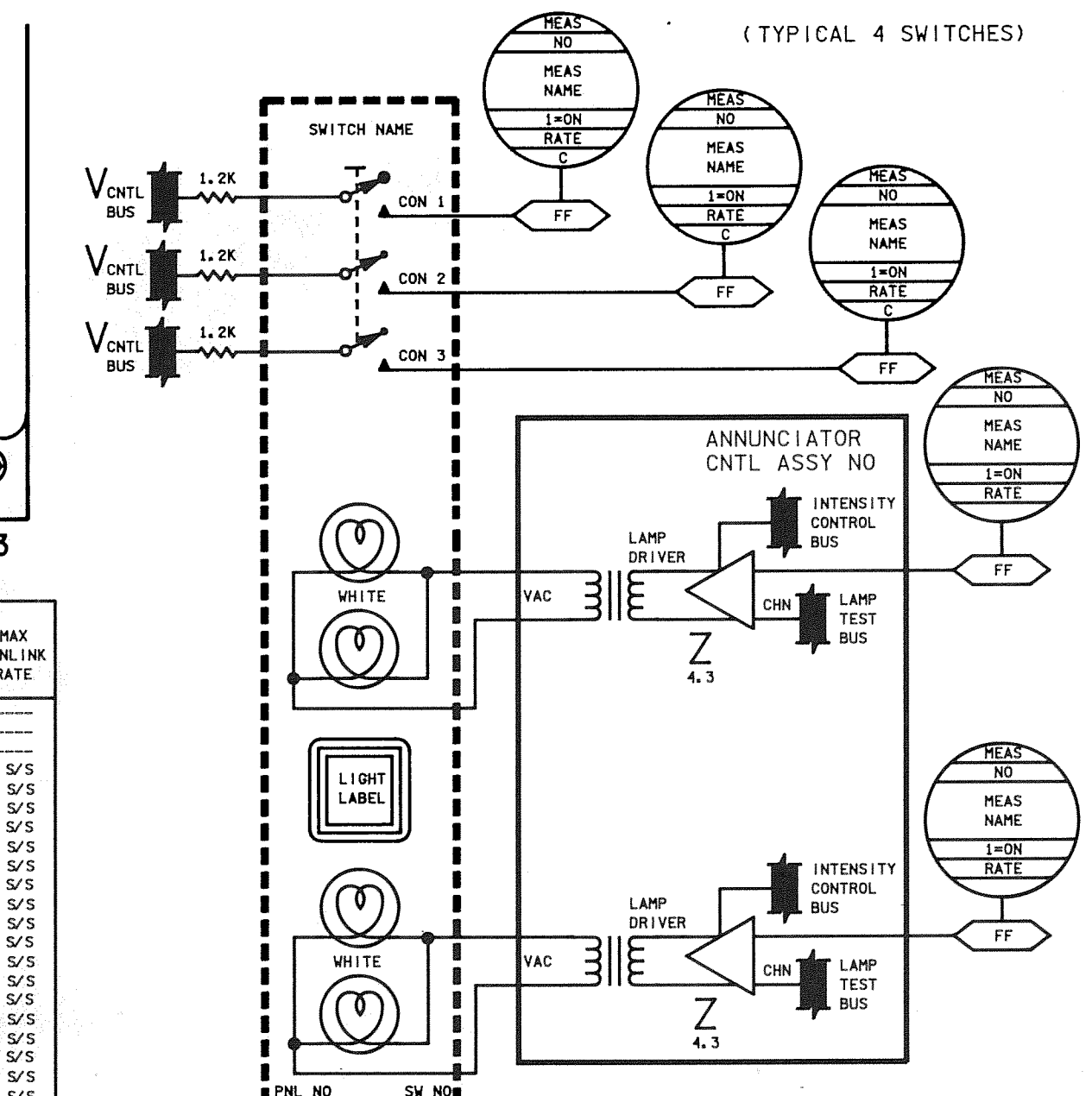

(TYPICAL 36 SWITCHES)

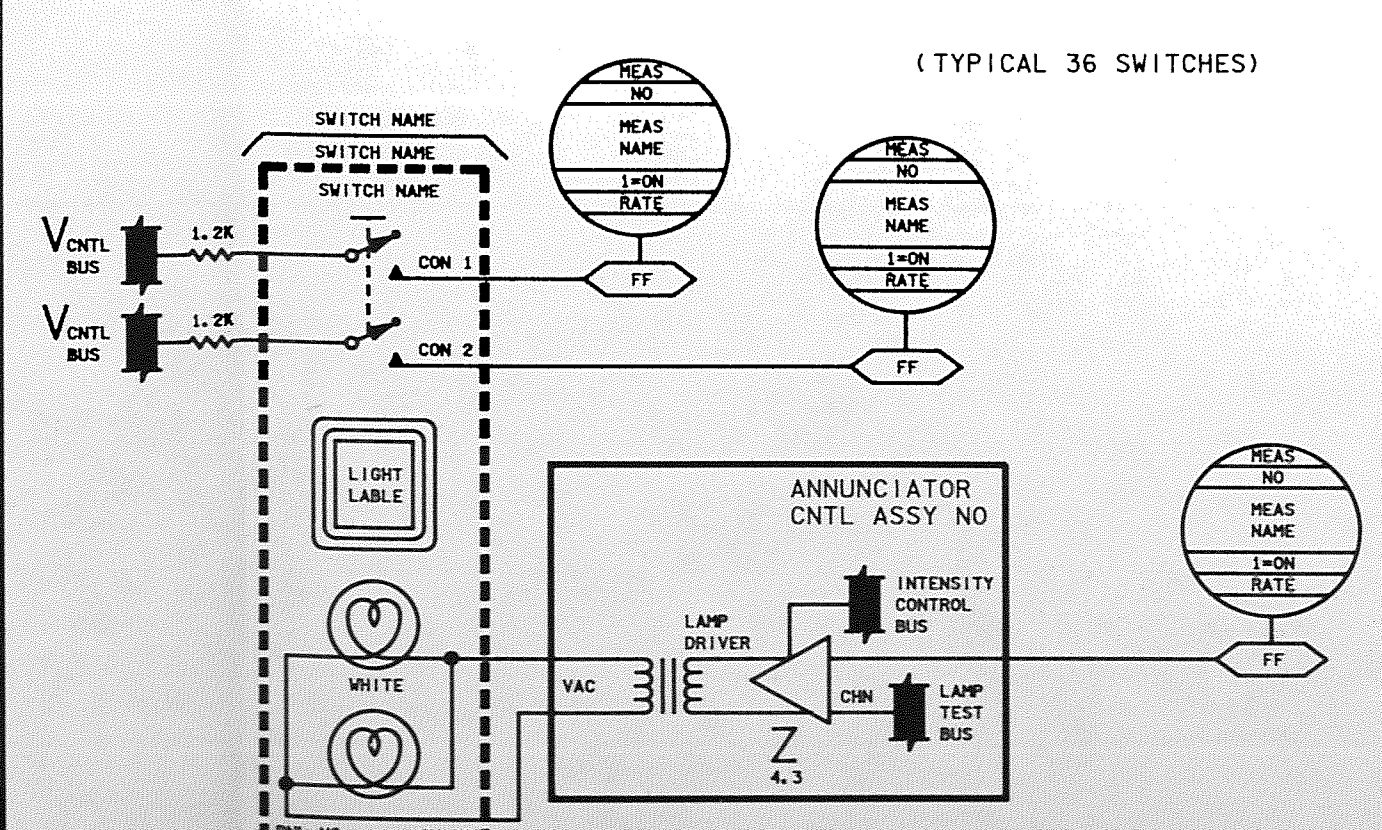

(TYPICAL 8 SWITCHES)

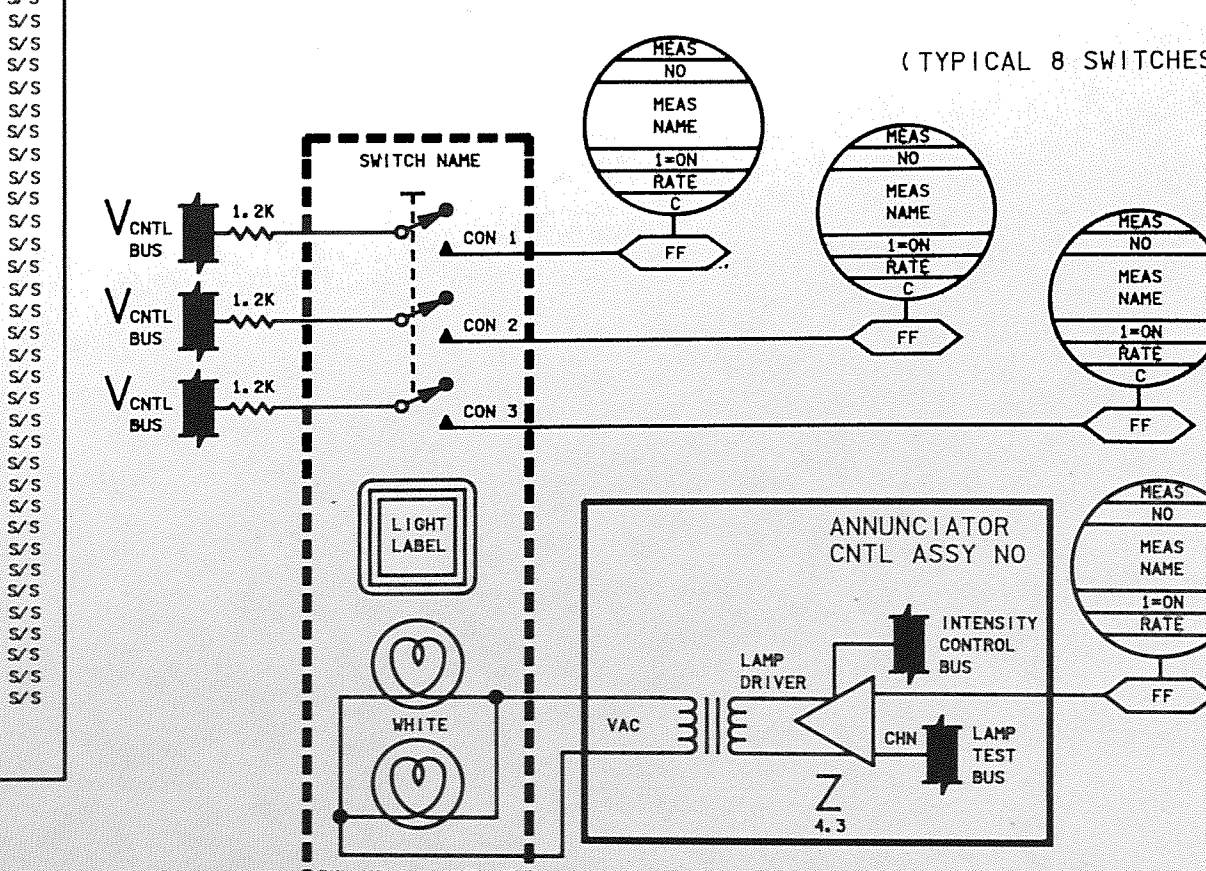

SWITCH NAME
SPD BK/THROT
BODY FLAP

SWITCH NAME
PITCH
ROLL/YAW

BASIC REV E-1

DATE: 10/23/91 | NAME: LAM | VERSION: INK 2

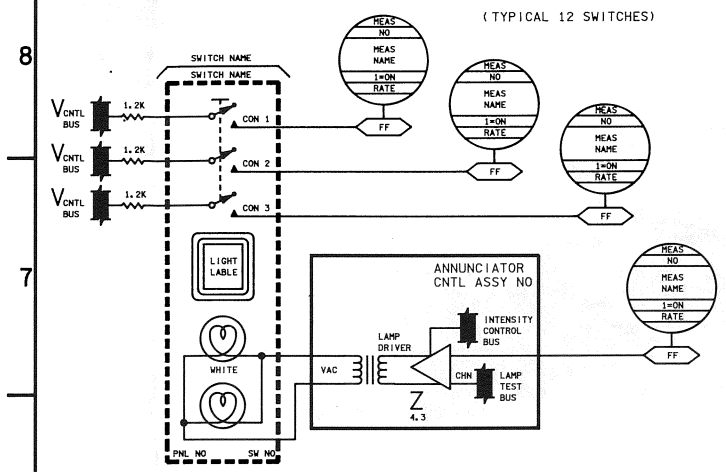

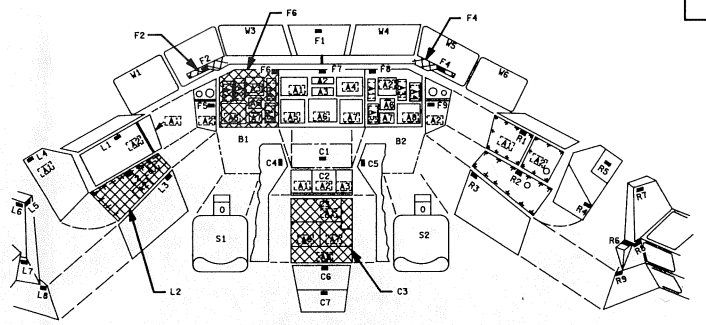

FLIGHT STATION

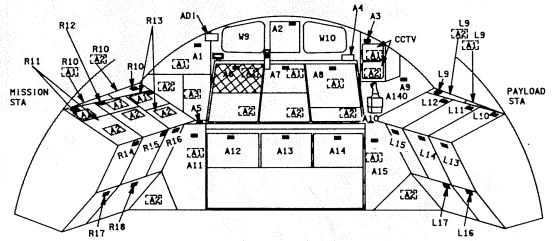

AFT STATION

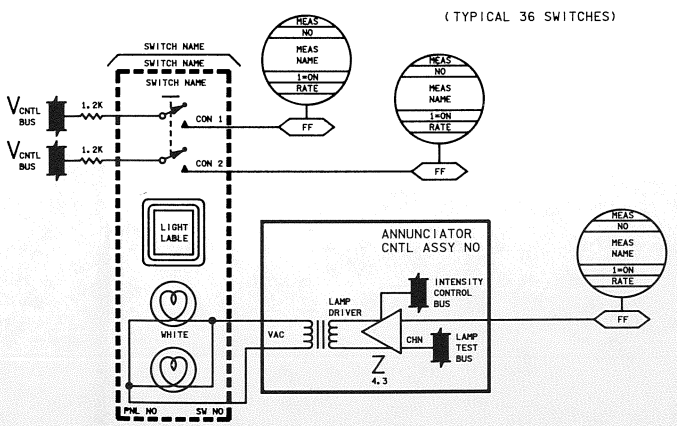

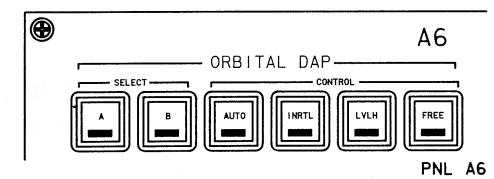

PNL A6

SWITCH NAME	PNL NO	SW NO	LIGHT LABEL	ANNUN CNTL Z 4.3	ASSY NO/ CHN	CON	V_{CNTL} BUS	FF MDM	MEAS NO	MEAS NAME	MAX DWNLINK RATE
ORBITAL DAP, SELECT	A6	S8	A			1	CA2	3	V72K6430X	AFT DAP SELECT A-A	12.5 S/S
						2	BC2	4	V72K6431X	AFT DAP SELECT A-B	12.5 S/S
						3	AB2	1	V72K6419X	AFT DAP SELECT A-C	12.5 S/S
						---		3	V72X6421X	AFT DAP SELECT A LT	------
		S9	B	K Z 4.3	4/1	1	CA2	3	V72K6432X	AFT DAP SELECT B-A	12.5 S/S
						2	BC2	4	V72K6433X	AFT DAP SELECT B-B	12.5 S/S
						3	AB2	1	V72K6420X	AFT DAP SELECT B-C	12.5 S/S
						---		3	V72X6422X	AFT DAP SELECT B LT	------
ORBITAL DAP, CONTROL	A6	S10	AUTO	K Z 4.3	4/3	1	CA2	3	V72K6490X	AFT DAP AUTO A	12.5 S/S
						2	BC2	4	V72K6491X	AFT DAP AUTO B	12.5 S/S
						3	AB2	1	V72K6492X	AFT DAP AUTO C	12.5 S/S
						---		3	V72X6498X	AFT DAP AUTO LT	------
		S11	INRTL	K Z 4.3	4/5	1	CA2	3	V72K6495X	AFT DAP MAN INRTL A	12.5 S/S
						2	BC2	4	V72K6496X	AFT DAP MAN INRTL B	12.5 S/S
						3	AB2	1	V72K6497X	AFT DAP MAN INRTL C	12.5 S/S
						---		3	V72X6499X	AFT DAP MAN INRTL LT	------
		S12	LVLH	K Z 4.3	5/1	1	CA2	3	V72K6517X	AFT DAP MAN LVLH A	1 S/S
						2	BC2	4	V72K6518X	AFT DAP MAN LVLH B	1 S/S
						3	AB2	1	V72K6415C	AFT DAP MAN LVLH C	1 S/S
						---		3	V72X6542X	AFT DAP MAN LVLH LT	------
		S13	FREE	K Z 4.3	5/3	1	CA2	3	V72K6412X	AFT DAP MAN FREE DFT A	1 S/S
						2	BC2	4	V72K6413X	AFT DAP MAN FREE DFT B	1 S/S
						3	AB2	1	V72K6414X	AFT DAP MAN FREE DFT C	1 S/S
				K Z 4.3	5/5	---		3	V72X6417X	AFT DAP MAN FREE DFT LT	------

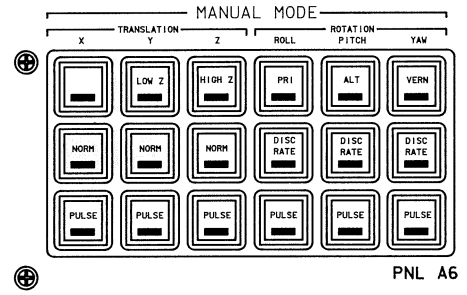

PNL A6

SWITCH NAME	PNL NO	SW NO	LIGHT LABEL	ANNUN CNTL Z 4.3	ASSY NO/ CHN	CON	V_{CNTL} BUS	FF MDM	MEAS NO	MEAS NAME	MAX DWNLINK RATE
MANUAL MODE, TRANSLATION, X	A6	S14	(BLANK)			1	CA2	3	------	------	------
						2	BC2	4	------	------	------
						---		3	------	------	------
		S20	NORM	K Z 4.3	4/9	1	CA2	3	V72K6510X	AFT TRANSL X NORM A	1 S/S
						2	BC2	4	V72K6511X	AFT TRANSL X NORM B	1 S/S
					4/17	---		3	V72X6540X	AFT TRANSL X NORM LT	------
		S26	PULSE			1	CA2	3	V72K6513X	AFT TRANSL X PULSE A	1 S/S
						2	BC2	4	V72K6514X	AFT TRANSL X PULSE B	1 S/S
					4/25	---		3	V72X6541X	AFT TRANSL X PULSE LT	------
MANUAL MODE, TRANSLATION, Y	A6	S15	LOW Z			1	CA2	3	V72K6527X	AFT TRANSL LOW Z A	1 S/S
						2	BC2	4	V72K6528X	AFT TRANSL LOW Z B	1 S/S
					4/11	---		3	V72X6545X	AFT TRANSL LOW Z LT	------
		S21	NORM			1	CA2	3	V72K6520X	AFT TRANSL Y NORM A	1 S/S
						2	BC2	4	V72K6521X	AFT TRANSL Y NORM B	1 S/S
					4/19	---		3	V72X6543X	AFT TRANSL Y NORM LT	------
		S27	PULSE			1	CA2	3	V72K6523X	AFT TRANSL Y PULSE A	1 S/S
						2	BC2	4	V72K6524X	AFT TRANSL Y PULSE B	1 S/S
					4/27	---		3	V72X6544X	AFT TRANSL Y PULSE LT	------
MANUAL MODE, TRANSLATION, Z	A6	S16	HIGH Z			1	CA2	3	V72K6537X	AFT TRANSL Z HIGH A	1 S/S
						2	BC2	4	V72K6538X	AFT TRANSL Z HIGH B	1 S/S
					4/13	---		3	V72X6548X	AFT TRANSL Z HIGH LT	------
		S22	NORM			1	CA2	3	V72K6530X	AFT TRANSL Z NORM A	1 S/S
						2	BC2	4	V72K6531X	AFT TRANSL Z NORM B	1 S/S
					4/21	---		3	V72X6546X	AFT TRANSL Z NORM LT	------
		S28	PULSE			1	CA2	3	V72K6533X	AFT TRANSL Z PULSE A	1 S/S
						2	BC2	4	V72K6534X	AFT TRANSL Z PULSE B	1 S/S
					4/29	---		3	V72X6547X	AFT TRANSL Z PULSE LT	------
MANUAL MODE, ROTATION, ROLL	A6	S17	PRI	K Z 4.3		1	CA2	3	V72K6505X	AFT RCS JETS NORM A	1 S/S
						2	BC2	4	V72K6506X	AFT RCS JETS NORM B	1 S/S
					5/9	---		3	V72X6502X	AFT RCS JETS NORM LT	------
		S23	DISC RATE			1	CA2	3	V72K6440X	AFT ROT ROLL DISC A	1 S/S
						2	BC2	4	V72K6441X	AFT ROT ROLL DISC B	1 S/S
					5/17	---		3	V72X6450X	AFT ROT ROLL DISC LT	------
		S29	PULSE			1	CA2	3	V72K6448X	AFT ROT ROLL PULSE A	1 S/S
						2	BC2	4	V72K6449X	AFT ROT ROLL PULSE B	1 S/S
					5/25	---		3	V72X6452X	AFT ROT ROLL PULSE LT	------
MANUAL MODE, ROTATION, PITCH	A6	S18	ALT			1	CA2	3	V72K6410X	AFT ALT PRCS MODE A	1 S/S
						2	BC2	4	V72K6411X	AFT ALT PRCS MODE B	1 S/S
					5/11	---		3	V72X6414X	AFT ALT PRCS MODE LT	------
		S24	DISC RATE			1	CA2	3	V72K6460X	AFT ROT PITCH DISC A	1 S/S
						2	BC2	4	V72K6461X	AFT ROT PITCH DISC B	1 S/S
					5/19	---		3	V72X6470X	AFT ROT PITCH DISC LT	------
		S30	PULSE			1	CA2	3	V72K6468X	AFT ROT PITCH PULSE A	1 S/S
						2	BC2	4	V72K6469X	AFT ROT PITCH PULSE B	1 S/S
					5/27	---		3	V72X6472X	AFT ROT PITCH PULSE LT	------
MANUAL MODE, ROTATION, YAW	A6	S19	VERN			1	CA2	3	V72K6507X	AFT RCS JETS VERN A	1 S/S
						2	BC2	4	V72K6508X	AFT RCS JETS VERN B	1 S/S
					5/13	---		3	V72X6503X	AFT RCS JETS VERN LT	------
		S25	DISC RATE			1	CA2	3	V72K6480X	AFT ROT YAW DISC A	1 S/S
						2	BC2	4	V72K6481X	AFT ROT YAW DISC B	1 S/S
					5/21	---		3	V72X6473X	AFT ROT YAW DISC LT	------
		S31	PULSE			1	CA2	3	V72K6488X	AFT ROT YAW PULSE A	1 S/S
						2	BC2	4	V72K6489X	AFT ROT YAW PULSE B	1 S/S
				K Z 4.3	5/29	---		3	V72X6475X	AFT ROT YAW PULSE LT	------

DATE: 05/07/90	NAME: VSH	VERSION: INK: 5
DATE: 05/07/90	NAME: VSH	VERSION: BPT: 8
DATE: 05/11/90	NAME: MDU	VERSION: INK: 1

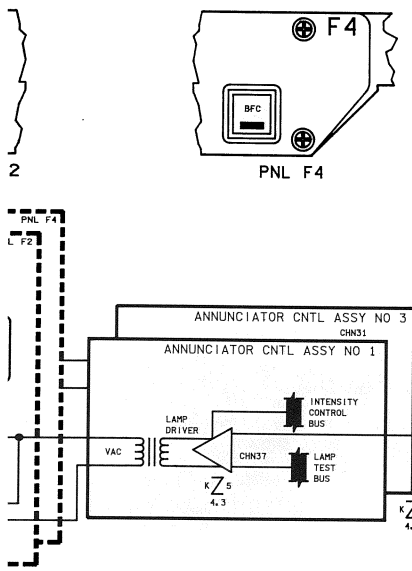

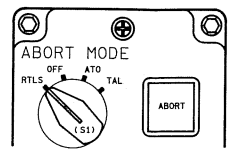

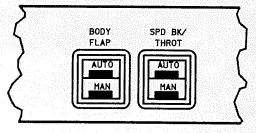

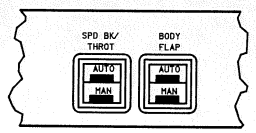

SWITCH NAME	PNL NO	SW NO	LIGHT LABEL	ANNUN CNTL Z 4.3	ANNUN CNTL ASSY NO/ CHN	CON	V CNTL BUS	FF MDM	MEAS NO	MEAS NAME	MAX DWNLINK RATE
SPD BK/THROT	F2	S8	AUTO/MAN			1	AB1	1	V72X1570X	LH SPD BK/THROT A/M A	1 S/S
						2	BC1	2	V72X1571X	LH SPD BK/THROT A/M B	1 S/S
						3	CA1	3	V72X1572X	LH SPD BK/THROT A/M C	1 S/S
				XZ5 4.3	1/25		----	1	V72X5136X	LH SPD BK AUTO LT	1 S/S
BODY FLAP	F2	S9	AUTO/MAN		1/27	1	AB1	2	V72X5137X	LH SPD BK MAN LT	1 S/S
						2	BC1	2	V72X4993X	LH BODY FLAP A/M A	1 S/S
						3	CA1	3	V72X4994X	LH BODY FLAP A/M B	1 S/S
				XZ5 4.3	1/29		----	1	V72X4995X	LH BODY FLAP A/M C	1 S/S
					1/11		----	1	V72X4996X	LH BODY FLAP AUTO LT	1 S/S
							----	2	V72X4997X	LH BODY FLAP MAN LT	1 S/S

SWITCH NAME	PNL NO	SW NO	LIGHT LABEL	ANNUN CNTL Z 4.3	ANNUN CNTL ASSY NO/ CHN	CON	V CNTL BUS	FF MDM	MEAS NO	MEAS NAME	MAX DWNLINK RATE
SPD BK/THROT	F4	S8	AUTO/MAN			1	BC2	2	V72X1600X	RH SPD BK/THROT A/M A	1 S/S
						2	CA2	3	V72X1601X	RH SPD BK/THROT A/M B	1 S/S
						3	BC3	4	V72X1602X	RH SPD BK/THROT A/M C	1 S/S
				XZ4 4.3	2/26		----	3	V72X5134X	RH SPD BK AUTO LT	1 S/S
BODY FLAP	F4	S9	AUTO/MAN		2/28	1	----	4	V72X5135X	RH SPD BK MAN LT	1 S/S
						2	BC2	2	V72X4893X	RH BODY FLAP A/M A	1 S/S
						3	CA2	3	V72X4894X	RH BODY FLAP A/M B	1 S/S
				XZ4 4.3	2/30		BC3	4	V72X4895X	RH BODY FLAP A/M C	1 S/S
					2/34		----	3	V72X4896X	RH BODY FLAP AUTO LT	1 S/S
							----	4	V72X4897X	RH BODY FLAP MAN LT	1 S/S

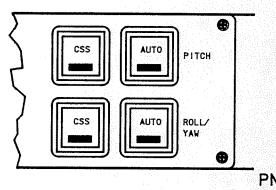

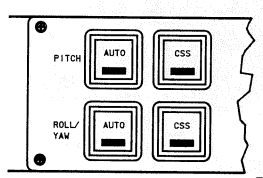

SWITCH NAME	PNL NO	SW NO	LIGHT LABEL	ANNUN CNTL Z 4.3	ANNUN CNTL ASSY NO/ CHN	CON	V CNTL BUS	FF MDM	MEAS NO	MEAS NAME	MAX DWNLINK RATE
PITCH	F2	S2	AUTO			1	AB1	1	V72X5251X	LH PITCH AUTO MODE A	1 S/S
						2	BC1	2	V72X5252X	LH PITCH AUTO MODE B	1 S/S
						3	CA1	3	V72X5253X	LH PITCH AUTO MODE C	1 S/S
				XZ5 4.3	1/13		----	1	V72X5240X	LH PITCH AUTO MODE LT	1 S/S
		S3	CSS			1	AB1	1	V72X5256X	LH PITCH CSS MODE A	1 S/S
						2	BC1	2	V72X5257X	LH PITCH CSS MODE B	1 S/S
					1/15	3	CA1	3	V72X5258X	LH PITCH CSS MODE C	1 S/S
							----	2	V72X5241X	LH PITCH CSS MODE LT	1 S/S
ROLL/YAW	F2	S5	AUTO			1	AB1	1	V72X5263X	LH R/Y AUTO MODE A	1 S/S
						2	BC1	2	V72X5266X	LH R/Y AUTO MODE B	1 S/S
						3	CA1	3	V72X5267X	LH R/Y AUTO MODE C	1 S/S
					1/19		----	1	V72X5243X	LH R/Y AUTO MODE LT	1 S/S
		S6	CSS			1	AB1	1	V72X5270X	LH R/Y CSS MODE A	1 S/S
						2	BC1	2	V72X5271X	LH R/Y CSS MODE B	1 S/S
						3	CA1	3	V72X5272X	LH R/Y CSS MODE C	1 S/S
				XZ6 4.3	1/21		----	2	V72X5245X	LH R/Y CSS MODE LT	1 S/S

SWITCH NAME	PNL NO	SW NO	LIGHT LABEL	ANNUN CNTL Z 4.3	ANNUN CNTL ASSY NO/ CHN	CON	V CNTL BUS	FF MDM	MEAS NO	MEAS NAME	MAX DWNLINK RATE
PITCH	F4	S2	AUTO			1	BC2	2	V72X5151X	RH PITCH AUTO MODE A	1 S/S
						2	CA2	3	V72X5152X	RH PITCH AUTO MODE B	1 S/S
						3	BC3	4	V72X5153X	RH PITCH AUTO MODE C	1 S/S
				XZ4 4.3	2/14		----	3	V72X5140X	RH PITCH AUTO MODE LT	1 S/S
		S3	CSS			1	BC2	2	V72X5156X	RH PITCH CSS MODE A	1 S/S
						2	CA2	3	V72X5157X	RH PITCH CSS MODE B	1 S/S
					2/16	3	BC3	4	V72X5158X	RH PITCH CSS MODE C	1 S/S
							----	4	V72X5141X	RH PITCH CSS MODE LT	1 S/S
ROLL/YAW	F4	S5	AUTO			1	BC2	2	V72X5165X	RH R/Y AUTO MODE A	1 S/S
						2	CA2	3	V72X5166X	RH R/Y AUTO MODE B	1 S/S
						3	BC3	4	V72X5167X	RH R/Y AUTO MODE C	1 S/S
					2/20		----	3	V72X5143X	RH R/Y AUTO MODE LT	1 S/S
		S6	CSS			1	BC2	2	V72X5170X	RH R/Y CSS MODE A	1 S/S
						2	CA2	3	V72X5171X	RH R/Y CSS MODE B	1 S/S
						3	BC3	4	V72X5172X	RH R/Y CSS MODE C	1 S/S
				XZ4 4.3	2/22		----	4	V72X5145X	RH R/Y CSS MODE LT	1 S/S

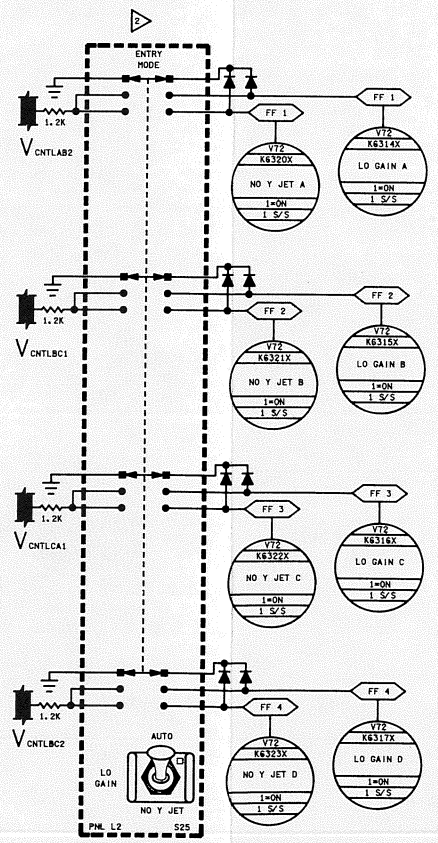

2

ENTRY MODE SWITCH SELECTION FILTER PROCESSING

THIS MATRIX SHOWS RM OUTPUT FOR THE VARIOUS STATE OF CONTACTS OF THE ENTRY MODE SWITCH. IF THE ENTRY SW OVERRIDE SIGNAL IS = +1, (ITEM 42, AUTO SEL ON SPEC 51 OVERRIDE DISPLAY), THE OUTPUT IS THE SAME AS IF THE CONTACT STATE WERE 0/0.

NO OF AVAILABLE CONTACTS ENERGIZED (+1)	LOW GAIN 0	LOW GAIN 1	LOW GAIN 2	LOW GAIN 3	LOW GAIN 4
0	SEL L GAIN = 0* SEL NO Y JET = 0 ENT SW FAIL = 0	SEL L GAIN = 0* SEL NO Y JET = 0 ENT SW FAIL = 0	SEL L GAIN = 1 SEL NO Y JET = 0 ENT SW FAIL = 1	SEL L GAIN = 1 SEL NO Y JET = 0 ENT SW FAIL = 1	SEL L GAIN = 1 SEL NO Y JET = 0 ENT SW FAIL = 0
1	SEL L GAIN = 0* SEL NO Y JET = 0 ENT SW FAIL = 0	SEL L GAIN = 0 SEL NO Y JET = 0 ENT SW FAIL = 1	SEL L GAIN = 0 SEL NO Y JET = 0 ENT SW FAIL = 1	SEL L GAIN = 1 SEL NO Y JET = 0 ENT SW FAIL = 1	SEL L GAIN = 1 SEL NO Y JET = 0 ENT SW FAIL = 1
2	SEL L GAIN = 0 SEL NO Y JET = 1 ENT SW FAIL = 1	SEL L GAIN = 0 SEL NO Y JET = 0 ENT SW FAIL = 1	SEL L GAIN = 0 SEL NO Y JET = 0 ENT SW FAIL = 1	SEL L GAIN = 1 SEL NO Y JET = 0 ENT SW FAIL = 1	SEL L GAIN = 1 SEL NO Y JET = 0 ENT SW FAIL = 1
3	SEL L GAIN = 0 SEL NO Y JET = 1 ENT SW FAIL = 1	SEL L GAIN = 0 SEL NO Y JET = 1 ENT SW FAIL = 1	SEL L GAIN = 0 SEL NO Y JET = 1 ENT SW FAIL = 1	SEL L GAIN = 0 SEL NO Y JET = 0 ENT SW FAIL = 1	SEL L GAIN = 1 SEL NO Y JET = 0 ENT SW FAIL = 1
4	SEL L GAIN = 0 SEL NO Y JET = 1 ENT SW FAIL = 0	SEL L GAIN = 0 SEL NO Y JET = 1 ENT SW FAIL = 1	SEL L GAIN = 0 SEL NO Y JET = 1 ENT SW FAIL = 1	SEL L GAIN = 0 SEL NO Y JET = 1 ENT SW FAIL = 1	SEL L GAIN = 0 SEL NO Y JET = 0 ENT SW FAIL = 1

*FDIR SHALL OPERATE IN THIS STATE IF SEVEN OR MORE CONTACTS ARE AVAILABLE

- FDIR FOR FOUR-CONTACT SWITCHES SHALL CONSIDER ALL THE CONTACTS AVAILABLE FOR FDIR TO BE A REDUNDANT SET. FDIR SHALL TERMINATE IF LESS THAN SEVEN OF THE EIGHT CONTACTS ARE AVAILABLE, OR IF MORE THAN ONE CONTACT IS IN THE (+1) STATE. WHEN FDIR RUNS, A SINGLE CONTACT IN THE (+1) STATE WHILE ALL OTHER CONTACTS ARE IN THE ZERO STATE SHALL BE DECLARED FAILED IF THE CONDITION PERSISTS FOR THREE CONSECUTIVE CYCLES
- GAX MSG "051 RL MODE SW" WILL APPEAR WHEN ENT SW FAIL = 1

NOTES: 1 THE DATA IN THE TABLES REFER TO THE ASSOCIATED TYPICAL SWITCH CIRCUIT

10 FCS SW 2

SIGNATURE	DATE	NATIONAL AERONAUTICS AND SPACE ADMINISTRATION LYNDON B. JOHNSON SPACE CENTER HOUSTON, TEXAS
DSGN MIKE BECKER	4-20-79	
DR		FCS MODE SWITCHES OI 20 AND SUBS
ENGR B.J. SCHOENBAUER		
ENGR	9/12/90	
APP	9/12/90	
APP	9/24/90	SPACE SHUTTLE
CHNG PLAN S.K. Kimbell	9-12-90	ALL
LTR E	PCN	10.4.5 X 3.4

DWG NO 9.10

SHEET 2 OF 2

BASIC REV E

(TYPICAL 12 SWITCHES)

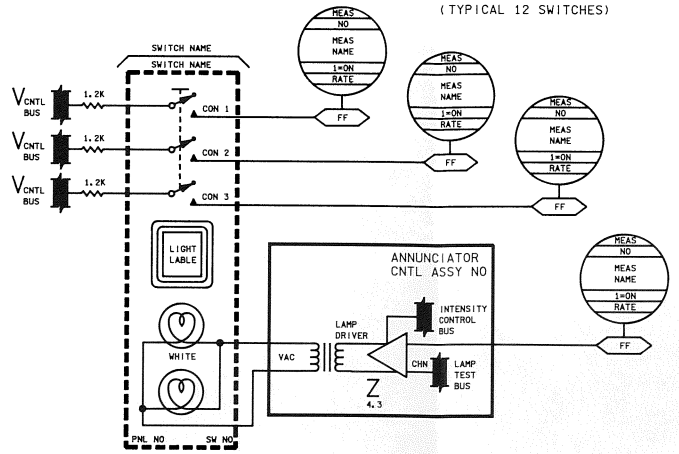

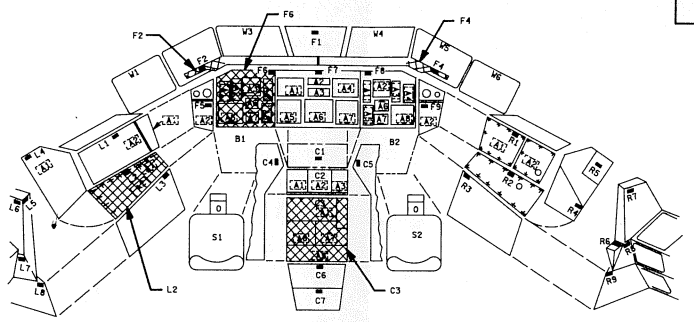

FLIGHT STATION

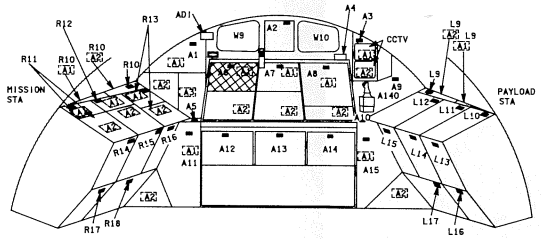

AFT STATION

(TYPICAL 36 SWITCHES)

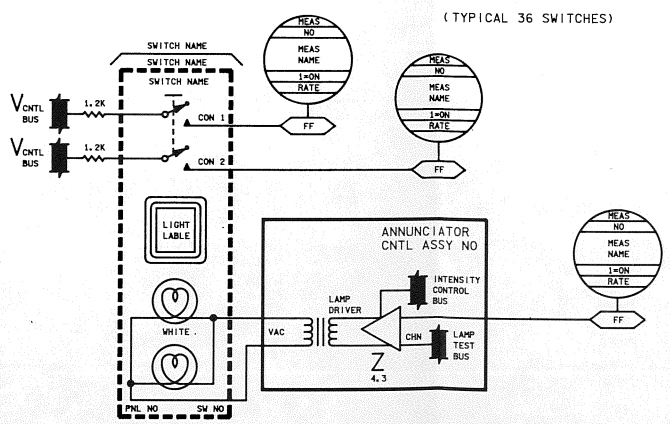

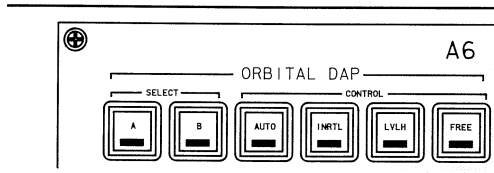

PNL A6

SWITCH NAME	PNL NO	SW NO	LIGHT LABEL	ANNUN CNTL Z 4.3 ASSY NO/ CHN	CON	V_{CNTL} BUS	FF MDM	MEAS NO	MEAS NAME	MAX DWNLINK RATE
ORBITAL DAP, SELECT	A6	S8	A	KZ_2 4.3 4/1	1	CA2	3	V72K6430X	AFT DAP SELECT A-A	12.5 S/S
					2	BC2	4	V72K6431X	AFT DAP SELECT A-B	12.5 S/S
					3	AB2	1	V72K6419X	AFT DAP SELECT A-C	12.5 S/S
		S9	B		----	----	3	V72K6421X	AFT DAP SELECT A LT	-----
					1	CA2	3	V72K6432X	AFT DAP SELECT B-A	12.5 S/S
					2	BC2	4	V72K6433X	AFT DAP SELECT B-B	12.5 S/S
					3	AB2	1	V72K6420X	AFT DAP SELECT B-C	12.5 S/S
					----	----	3	V72K6422X	AFT DAP SELECT B LT	-----
ORBITAL DAP, CONTROL	A6	S10	AUTO	KZ_2 4.3 4/3	1	CA2	3	V72K6490X	AFT DAP AUTO A	12.5 S/S
					2	BC2	4	V72K6491X	AFT DAP AUTO B	12.5 S/S
					3	AB2	1	V72K6492X	AFT DAP AUTO C	12.5 S/S
				KZ_2 4.3 4/5	----	----	3	V72K6498X	AFT DAP AUTO LT	-----
		S11	INRTL		1	CA2	3	V72K6495X	AFT DAP MAN INRTL A	12.5 S/S
					2	BC2	4	V72K6496X	AFT DAP MAN INRTL B	12.5 S/S
					3	AB2	1	V72K6497X	AFT DAP MAN INRTL C	12.5 S/S
				KZ_1 4.3 5/1	----	----	3	V72K6499X	AFT DAP MAN INRTL LT	-----
		S12	LVLH		1	CA2	3	V72K6517X	AFT DAP MAN LVLH A	1 S/S
					2	BC2	4	V72K6518X	AFT DAP MAN LVLH B	1 S/S
					3	AB2	1	V72K6515X	AFT DAP MAN LVLH C	1 S/S
					----	----	3	V72K6542X	AFT DAP MAN LVLH LT	-----
		S13	FREE	KZ_1 4.3 5/3	1	CA2	3	V72K6412X	AFT DAP MAN FREE DFT A	1 S/S
					2	BC2	4	V72K6413X	AFT DAP MAN FREE DFT B	1 S/S
					3	AB2	1	V72K6414X	AFT DAP MAN FREE DFT C	1 S/S
				KZ_1 4.3 5/5	----	----	3	V72K6417X	AFT DAP MAN FREE DFT LT	-----

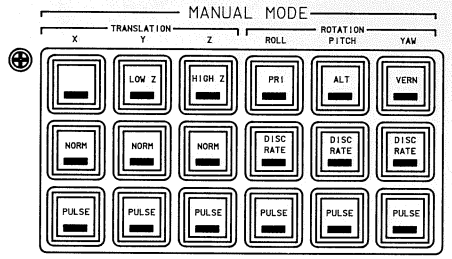

PNL A6

SWITCH NAME	PNL NO	SW NO	LIGHT LABEL	ANNUN CNTL Z 4.3 ASSY NO/ CHN	CON	V_{CNTL} BUS	FF MDM	MEAS NO	MEAS NAME	MAX DWNLINK RATE
MANUAL MODE, TRANSLATION, X	A6	S14	(BLANK)	KZ_2 4.3 4/9	1	CA2	3	-----	-----	-----
					2	BC2	4	-----	-----	-----
					3	----	3	----	----	-----
		S20	NORM		1	CA2	3	V72K6510X	AFT TRANSL X NORM A	1 S/S
					2	BC2	4	V72K6511X	AFT TRANSL X NORM B	1 S/S
				4/17	----	----	3	V72K6540X	AFT TRANSL X NORM LT	-----
		S26	PULSE		1	CA2	3	V72K6513X	AFT TRANSL X PULSE A	1 S/S
					2	BC2	4	V72K6514X	AFT TRANSL X PULSE B	1 S/S
				4/25	----	----	3	V72K6541X	AFT TRANSL X PULSE LT	-----
MANUAL MODE, TRANSLATION, Y	A6	S15	LOW Z		1	CA2	3	V72K6527X	AFT TRANSL LOW Z A	1 S/S
					2	BC2	4	V72K6528X	AFT TRANSL LOW Z B	1 S/S
				4/11	----	----	3	V72K6545X	AFT TRANSL LOW Z LT	-----
		S21	NORM		1	CA2	3	V72K6520X	AFT TRANSL Y NORM A	1 S/S
					2	BC2	4	V72K6521X	AFT TRANSL Y NORM B	1 S/S
				4/19	----	----	3	V72K6543X	AFT TRANSL Y NORM LT	-----
		S27	PULSE		1	CA2	3	V72K6523X	AFT TRANSL Y PULSE A	1 S/S
					2	BC2	4	V72K6524X	AFT TRANSL Y PULSE B	1 S/S
				4/27	----	----	3	V72K6544X	AFT TRANSL Y PULSE LT	-----
MANUAL MODE, TRANSLATION, Z	A6	S16	HIGH Z		1	CA2	3	V72K6537X	AFT TRANSL Z HIGH A	1 S/S
					2	BC2	4	V72K6538X	AFT TRANSL Z HIGH B	1 S/S
				4/13	----	----	3	V72K6548X	AFT TRANSL Z HIGH LT	-----
		S22	NORM		1	CA2	3	V72K6530X	AFT TRANSL Z NORM A	1 S/S
					2	BC2	4	V72K6531X	AFT TRANSL Z NORM B	1 S/S
				4/21	----	----	3	V72K6546X	AFT TRANSL Z NORM LT	-----
		S28	PULSE		1	CA2	3	V72K6533X	AFT TRANSL Z PULSE A	1 S/S
					2	BC2	4	V72K6534X	AFT TRANSL Z PULSE B	1 S/S
				4/29	----	----	3	V72K6547X	AFT TRANSL Z PULSE LT	-----
MANUAL MODE, ROTATION, ROLL	A6	S17	PRI	KZ_2 4.3 KZ_1 4.3	1	CA2	3	V72K6505X	AFT RCS JETS NORM A	1 S/S
					2	BC2	4	V72K6506X	AFT RCS JETS NORM B	1 S/S
					----	----	3	V72K6502X	AFT RCS JETS NORM LT	-----
		S23	DISC RATE	5/9	1	CA2	3	V72K6440X	AFT ROT ROLL DISC A	1 S/S
					2	BC2	4	V72K6441X	AFT ROT ROLL DISC B	1 S/S
					----	----	3	V72K6450X	AFT ROT ROLL DISC LT	-----
		S29	PULSE	5/17	1	CA2	3	V72K6448X	AFT ROT ROLL PULSE A	1 S/S
					2	BC2	4	V72K6449X	AFT ROT ROLL PULSE B	1 S/S
				5/25	----	----	3	V72K6452X	AFT ROT ROLL PULSE LT	-----
MANUAL MODE, ROTATION, PITCH	A6	S18	ALT	5/11	1	CA2	3	V72K6410X	AFT ALT PRCS MODE A	1 S/S
					2	BC2	4	V72K6411X	AFT ALT PRCS MODE B	1 S/S
					----	----	3	V72K6416X	AFT ALT PRCS MODE LT	-----
		S24	DISC RATE	5/19	1	CA2	3	V72K6460X	AFT ROT PITCH DISC A	1 S/S
					2	BC2	4	V72K6461X	AFT ROT PITCH DISC B	1 S/S
					----	----	3	V72K6470X	AFT ROT PITCH DISC LT	-----
		S30	PULSE	5/27	1	CA2	3	V72K6468X	AFT ROT PITCH PULSE A	1 S/S
					2	BC2	4	V72K6469X	AFT ROT PITCH PULSE B	1 S/S
					----	----	3	V72K6472X	AFT ROT PITCH PULSE LT	-----
MANUAL MODE, ROTATION, YAW	A6	S19	VERN	5/13	1	CA2	3	V72K6507X	AFT RCS JETS VERN A	1 S/S
					2	BC2	4	V72K6508X	AFT RCS JETS VERN B	1 S/S
					----	----	3	V72K6503X	AFT RCS JETS VERN LT	-----
		S25	DISC RATE	5/21	1	CA2	3	V72K6480X	AFT ROT YAW DISC A	1 S/S
					2	BC2	4	V72K6481X	AFT ROT YAW DISC B	1 S/S
					----	----	3	V72K6473X	AFT ROT YAW DISC LT	-----
		S31	PULSE	5/29	1	CA2	3	V72K6488X	AFT ROT YAW PULSE A	1 S/S
					2	BC2	4	V72K6489X	AFT ROT YAW PULSE B	1 S/S
					----	----	3	V72K6475X	AFT ROT YAW PULSE LT	-----

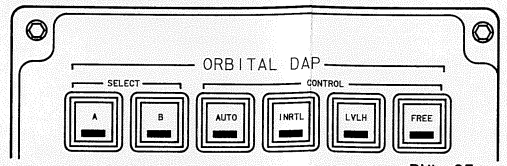

PNL C3

SWITCH NAME	PNL NO	SW NO	LIGHT LABEL	ANNUN CNTL Z 4.3 ASSY NO/ CHN	CON	V_{CNTL} BUS	FF MDM	MEAS NO	MEAS NAME	MAX DWNLINK RATE
ORBITAL DAP, SELECT	C3	S1	A	KZ_3 4.3 3/2	1	AB3	1	V72K2801X	FWD DAP SELECT A-A	12.5 S/S
					2	BC3	2	V72K2802X	FWD DAP SELECT A-B	12.5 S/S
					3	CA3	3	V72K2803X	FWD DAP SELECT A-C	12.5 S/S
		S2	B		----	----	1	V72K2807X	FWD DAP SELECT A LT	5 S/S
					1	AB3	1	V72K2803X	FWD DAP SELECT B-A	12.5 S/S
					2	BC3	2	V72K2804X	FWD DAP SELECT B-B	12.5 S/S
					3	CA3	3	V72K2806X	FWD DAP SELECT B-C	12.5 S/S
					----	----	1	V72K2808X	FWD DAP SELECT B LT	1 S/S
ORBITAL DAP, CONTROL	C3	S3	AUTO	KZ_3 4.3 3/4	1	AB3	1	V72K2840X	FWD DAP AUTO A	12.5 S/S
					2	BC3	2	V72K2841X	FWD DAP AUTO B	12.5 S/S
					3	CA3	3	V72K2842X	FWD DAP AUTO C	12.5 S/S
				KZ_3 4.3 3/6	----	----	1	V72K2850X	FWD DAP AUTO LT	5 S/S
		S4	INRTL		1	AB3	1	V72K2845X	FWD DAP MAN INRTL A	12.5 S/S
					2	BC3	2	V72K2846X	FWD DAP MAN INRTL B	12.5 S/S
					3	CA3	3	V72K2847X	FWD DAP MAN INRTL C	12.5 S/S
				KZ_5 4.3 3/2	----	----	1	V72K2849X	FWD DAP MAN INRTL LT	1 S/S
		S5	LVLH		1	AB3	1	V72K2864X	FWD RCS MAN LVLH A	1 S/S
					2	BC3	2	V72K2865X	FWD RCS MAN LVLH B	1 S/S
					3	CA3	3	V72K2895X	FWD RCS MAN LVLH C	1 S/S
					----	----	1	V72K2868X	FWD RCS MAN LVLH LT	5 S/S
		S6	FREE	KZ_5 4.3 1/2	1	AB3	1	V72K2892X	FWD RCS MAN FREE DFT A	1 S/S
					2	BC3	2	V72K2893X	FWD RCS MAN FREE DFT B	1 S/S
					3	CA3	3	V72K2894X	FWD RCS MAN FREE DFT C	1 S/S
				KZ_5 4.3 1/2	----	----	1	V72K2897X	FWD RCS MAN FREE DFT LT	1 S/S

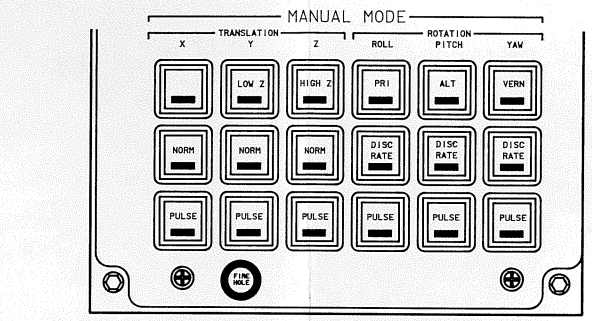

PNL C3

SWITCH NAME	PNL NO	SW NO	LIGHT LABEL	ANNUN CNTL Z 4.3 ASSY NO/ CHN	CON	V_{CNTL} BUS	FF MDM	MEAS NO	MEAS NAME	MAX DWNLINK RATE
MANUAL MODE, TRANSLATION, X	C3	S16	(BLANK)	KZ_3 4.3 3/10	1	AB3	1	-----	-----	-----
					2	BC3	2	-----	-----	-----
					----	----	1	----	----	-----
		S19	NORM		1	AB3	1	V72K2860X	FWD TRANSL X NORM A	1 S/S
					2	BC3	2	V72K2861X	FWD TRANSL X NORM B	1 S/S
				3/18	----	----	1	V72K2868X	FWD TRANSL X NORM LT	1 S/S
		S22	PULSE		1	AB3	1	V72K2862X	FWD TRANSL X PULSE A	1 S/S
					2	BC3	2	V72K2863X	FWD TRANSL X PULSE B	1 S/S
				3/26	----	----	1	V72K2867X	FWD TRANSL X PULSE LT	1 S/S
MANUAL MODE, TRANSLATION, Y	C3	S17	LOW Z		1	AB3	1	V72K2874X	FWD TRANSL LOW Z A	1 S/S
					2	BC3	2	V72K2875X	FWD TRANSL LOW Z B	1 S/S
				3/12	----	----	1	V72K2878X	FWD TRANSL LOW Z LT	1 S/S
		S20	NORM		1	AB3	1	V72K2870X	FWD TRANSL Y NORM A	1 S/S
					2	BC3	2	V72K2871X	FWD TRANSL Y NORM B	1 S/S
				3/20	----	----	1	V72K2876X	FWD TRANSL Y NORM LT	1 S/S
		S23	PULSE		1	AB3	1	V72K2872X	FWD TRANSL Y PULSE A	1 S/S
					2	BC3	2	V72K2873X	FWD TRANSL Y PULSE B	1 S/S
				3/28	----	----	1	V72K2877X	FWD TRANSL Y PULSE LT	1 S/S
MANUAL MODE, TRANSLATION, Z	C3	S18	HIGH Z		1	AB3	1	V72K2884X	FWD TRANSL Z HIGH A	1 S/S
					2	BC3	2	V72K2885X	FWD TRANSL Z HIGH B	1 S/S
				3/14	----	----	1	V72K2888X	FWD TRANSL Z HIGH LT	1 S/S
		S21	NORM		1	AB3	1	V72K2880X	FWD TRANSL Z NORM A	1 S/S
					2	BC3	2	V72K2881X	FWD TRANSL Z NORM B	1 S/S
				3/22	----	----	1	V72K2886X	FWD TRANSL Z NORM LT	1 S/S
		S24	PULSE		1	AB3	1	V72K2882X	FWD TRANSL Z PULSE A	1 S/S
					2	BC3	2	V72K2883X	FWD TRANSL Z PULSE B	1 S/S
				3/30	----	----	1	V72K2887X	FWD TRANSL Z PULSE LT	1 S/S
MANUAL MODE, ROTATION, ROLL	C3	S7	PRI		1	AB3	1	V72K2851X	FWD RCS JETS NORM A	1 S/S
					2	BC3	2	V72K2852X	FWD RCS JETS NORM B	1 S/S
				1/10	----	----	1	V72K2855X	FWD RCS JETS NORM LT	1 S/S
		S10	DISC RATE		1	AB3	1	V72K2812X	FWD ROT ROLL DISC A	1 S/S
					2	BC3	2	V72K2813X	FWD ROT ROLL DISC B	1 S/S
				1/18	----	----	1	V72K2790X	FWD ROT ROLL DISC LT	1 S/S
		S13	PULSE		1	AB3	1	V72K2816X	FWD ROT ROLL PULSE A	1 S/S
					2	BC3	2	V72K2817X	FWD ROT ROLL PULSE B	1 S/S
				1/26	----	----	1	V72K2792X	FWD ROT ROLL PULSE LT	5 S/S
MANUAL MODE, ROTATION, PITCH	C3	S8	ALT		1	AB3	1	V72K2890X	FWD ALT PRCS MODE A	1 S/S
					2	BC3	2	V72K2891X	FWD ALT PRCS MODE B	1 S/S
				1/12	----	----	1	V12K2896X	FWD ALT PRCS MODE LT	1 S/S
		S11	DISC RATE		1	AB3	1	V72K2822X	FWD ROT PITCH DISC A	1 S/S
					2	BC3	2	V72K2823X	FWD ROT PITCH DISC B	1 S/S
				1/20	----	----	1	V72K2793X	FWD ROT PITCH DISC LT	1 S/S
		S14	PULSE		1	AB3	1	V72K2826X	FWD ROT PITCH PULSE A	1 S/S
					2	BC3	2	V72K2827X	FWD ROT PITCH PULSE B	1 S/S
				1/28	----	----	1	V72K2795X	FWD ROT PITCH PULSE LT	1 S/S
					1	AB3	1	V72K2853X	FWD RCS JETS YERN LT A	1 S/S
					2	BC3	2	V72K2854X	FWD RCS JETS VERN LT B	1 S/S
				1/14	----	----	1	V72K2856X	FWD RCS JETS VERN LT LT	1 S/S
MANUAL MODE, ROTATION, YAW	C3	S9	VERN		1	AB3	1	V72K2832X	FWD ROT YAW DISC A	1 S/S
					2	BC3	2	V72K2833X	FWD ROT YAW DISC B	1 S/S
				1/22	----	----	1	V72K2798X	FWD ROT YAW DISC LT	1 S/S
		S12	DISC RATE		1	AB3	1	V72K2836X	FWD ROT YAW PULSE A	1 S/S
					2	BC3	2	V72K2837X	FWD ROT YAW PULSE B	1 S/S
				1/30	----	----	1	V72K2798X	FWD ROT YAW PULSE LT	1 S/S
		S15	PULSE							

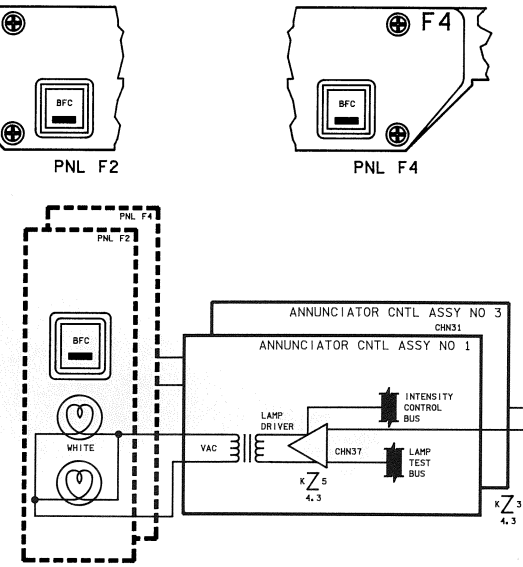

(TYPICAL 4 SWITCHES)

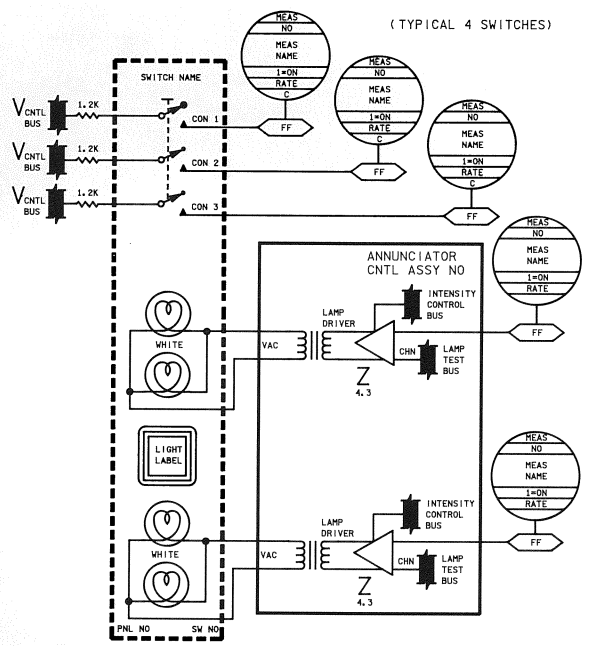

SWITCH NAME	PNL NO
SPD BK/THROT	F
BODY FLAP	F

(TYPICAL 8 SWITCHES)

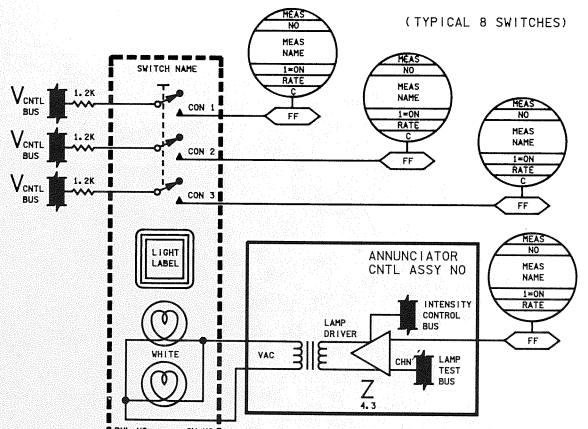

SWITCH NAME	PNL NO
PITCH	F2
ROLL/YAW	F2

BASIC REV E

SWITCH NAME	PNL NO	SW	LIGHT LABEL	ANNUN CNTL Z 4,3	ANNUN CNTL ASSY NO/ CHN	CON	V CNTL BUS	FF	MEAS NO	MAX DWELINK RATE
MANUAL MODE, TRANSLATION, X	A6	S14	(BLANK)	Z_3 3/10	1	1	----	3	----	----
		S19	NORM	Z_3 3/18	2	1	----	3	----	----
		S22	PULSE	Z_3 3/26	1	1	----	3	----	----
MANUAL MODE, TRANSLATION, Y	C3	S17	LOW Z	Z_3 3/12	2	1	----	3	----	----
		S20	NORM	Z_3 3/20	1	1	----	3	----	----
		S23	PULSE	Z_3 3/28	2	1	----	3	----	----
MANUAL MODE, TRANSLATION, Z	C3	S18	HIGH Z	Z_3 3/14	1	1	----	3	----	----
		S21	NORM	Z_3 3/22	2	1	----	3	----	----
		S24	PULSE	Z_3 3/30	1	1	----	3	----	----
MANUAL MODE, ROTATION, ROLL	C3	S7	PRI	Z_3 3/10	2	1	----	3	----	----
		S10	DISC RATE	Z_3 3/18	1	1	----	3	----	----
		S13	PULSE	Z_3 3/26	2	1	----	3	----	----
MANUAL MODE, ROTATION, PITCH	C3	S8	ALT	Z_3 3/12	1	1	----	3	----	----
		S11	DISC RATE	Z_3 3/20	2	1	----	3	----	----
		S14	PULSE	Z_3 3/28	1	1	----	3	----	----
MANUAL MODE, ROTATION, YAW	C3	S9	VERN	Z_3 3/14	2	1	----	3	----	----
		S12	DISC RATE	Z_3 3/22	1	1	----	3	----	----
		S15	PULSE	Z_3 3/30	2	1	----	3	----	----

SWITCH NAME	PNL NO	SW	LIGHT LABEL	ANNUN CNTL Z 4,3	ANNUN CNTL ASSY NO/ CHN	CON	V CNTL BUS	FF	MEAS NO	MAX DWELINK RATE
MANUAL MODE, TRANSLATION, X	A6	S14	(BLANK)	Z_3 4/9	1	1	CA2	3	----	----
		S20	NORM	Z_2 4/9	2	1	BC2	4	V12X6451DX	AFT TRANSL X NORM A
		S26	PULSE	Z_1 4/9	1	1	CA3	3	----	----
MANUAL MODE, TRANSLATION, Y	A6	S15	LOW Z	Z_3 4/25	2	1	BC2	4	V12X6452X	AFT TRANSL Y NORM A
		S21	NORM	Z_2 4/11	1	1	CA2	3	V12X6452DX	AFT TRANSL Y NORM B
		S27	PULSE	Z_1 4/19	2	1	BC2	4	V12X6452EX	AFT TRANSL Y PULSE A
MANUAL MODE, TRANSLATION, Z	A6	S16	HIGH Z	Z_3 4/27	1	1	CA2	3	V12X6453X	AFT TRANSL Z HIGH A
		S22	NORM	Z_2 4/13	2	1	BC2	4	V12X6453DX	AFT TRANSL Z NORM A
		S28	PULSE	Z_1 4/21	1	1	CA2	3	V12X6453EX	AFT TRANSL Z PULSE A
MANUAL MODE, ROTATION, ROLL	A6	S17	PRI	Z_3 4/29	2	1	BC2	4	V12X6454X	AFT TRANSL Z PULSE LT
		S23	DISC RATE	Z_2 4/29	1	1	CA2	3	V12X6454DX	AFT TRANSL Z NORM LT
		S29	PULSE	Z_1 4/29	2	1	BC2	4	V12X6454EX	AFT TRANSL Z PULSE LT
MANUAL MODE, ROTATION, PITCH	A6	S18	ALT	Z_3 5/11	1	1	CA2	3	V12X6455X	AFT TRANSL Z PULSE B
		S25	DISC RATE	Z_2 5/11	2	1	BC2	4	V12X6455DX	AFT TRANSL Z NORM B
		S31	PULSE	Z_1 5/11	1	1	CA2	3	V12X6455EX	AFT TRANSL Z PULSE B
MANUAL MODE, ROTATION, YAW	A6	S19	VERN	Z_3 5/13	2	1	BC2	4	V12X6456X	AFT TRANSL X NORM B
		S26	PULSE	Z_2 5/19	1	1	CA2	3	V12X6456DX	AFT TRANSL X NORM LT
		S30	PULSE	Z_1 5/19	2	1	BC2	4	V12X6456EX	AFT TRANSL X PULSE LT
MANUAL MODE, ROTATION, PITCH	A6	S24	DISC RATE	Z_3 5/27	1	1	CA2	3	V12X6457X	AFT TRANSL X PULSE A
		S27	PULSE	Z_2 5/27	2	1	BC2	4	V12X6457DX	AFT TRANSL X NORM A
		S32	PULSE	Z_1 5/27	1	1	CA2	3	V12X6457EX	AFT TRANSL X PULSE A
MANUAL MODE, ROTATION, ROLL	A6	S25	DISC RATE	Z_3 5/13	2	1	BC2	4	V12X6458X	AFT TRANSL X NORM B
		S28	PULSE	Z_2 5/21	1	1	CA2	3	V12X6458DX	AFT TRANSL X NORM LT
		S33	PULSE	Z_1 5/21	2	1	BC2	4	V12X6458EX	AFT TRANSL X PULSE LT
MANUAL MODE, ROTATION, YAW	A6	S29	VERN	Z_3 5/29	1	1	CA2	3	V12X6459X	AFT TRANSL X PULSE B
		S34	PULSE	Z_2 5/29	2	1	BC2	4	V12X6459DX	AFT TRANSL X NORM B
		S35	PULSE	Z_1 5/29	1	1	CA2	3	V12X6459EX	AFT TRANSL X PULSE B

SWITCH NAME	PNL NO	SW	LIGHT LABEL	ANNUN CNTL Z 4,3	ANNUN CNTL ASSY NO/ CHN	CON	V CNTL BUS	FF	MEAS NO	MAX DWELINK RATE
ORBITAL DAP, SELECT	A6	S8	A	Z_3 4/1	1	1	CA2	3	V12X6461X	AFT DAP SELECT A-A
		S9	B	Z_2 4/1	2	1	BC2	4	V12X6461DX	AFT DAP SELECT A-B
		S10	AUTO	Z_1 4/3	1	1	CA2	3	V12X6461EX	AFT DAP SELECT A-C
ORBITAL DAP, CONTROL	A6	S11	INRTL	Z_3 4/5	2	1	BC2	4	V12X6462X	AFT DAP SELECT B-A
		S12	LVLH	Z_2 4/3	1	1	CA2	3	V12X6462DX	AFT DAP SELECT B-B
		S13	FREE	Z_1 4/5	2	1	BC2	4	V12X6462EX	AFT DAP SELECT B-C
				Z_3 5/5	1	1	CA3	3	V12X6463X	AFT DAP SELECT C-A
				Z_2 5/3	2	1	BC3	4	V12X6463DX	AFT DAP SELECT C-B
				Z_1 5/3	1	1	CA3	3	V12X6463EX	AFT DAP SELECT C-C
				Z_3 5/21	2	1	BC3	4	V12X6464X	AFT DAP MAN INRTL A
				Z_2 5/21	1	1	CA3	3	V12X6464DX	AFT DAP MAN INRTL B
				Z_1 5/21	2	1	BC3	4	V12X6464EX	AFT DAP MAN INRTL C
				Z_3 5/23	1	1	CA3	3	V12X6465X	AFT DAP MAN LVLH A
				Z_2 5/23	2	1	BC3	4	V12X6465DX	AFT DAP MAN LVLH B
				Z_1 5/23	1	1	CA3	3	V12X6465EX	AFT DAP MAN LVLH C
				Z_3 5/31	2	1	BC3	4	V12X6466X	AFT DAP MAN FREE OFT
				Z_2 5/31	1	1	CA3	3	V12X6466DX	AFT DAP MAN FREE OFT
				Z_1 5/31	2	1	BC3	4	V12X6466EX	AFT DAP MAN FREE OFT

ANNUNCIATOR CNTL ASSY NO

SWITCH NAME

(TYPICAL 36 SWITCHES)

AFT STATION

FLIGHT STATION

(TYPICAL 12 SWITCHES)

PNL A6

PNL C3

DATE: 09/11/90 | NAME: MDU | VERSION: INR4.1

S R Q P O N M

DATE: 8/14/87	NAME: JMB	VERSION: INK: 4
DATE: 9/5/87	NAME: MPM	VERSION: INK: 5
DATE: 08/18/90	NAME: MAG	VERSION: INK: 6

V58 P0812A — LIB ELVN SEC ΔP 1 — −3000 TO +3000 PSID — 25 S/S — (P0813A) (P0814A) (P0815A) — 0A1 (0A2) (0A3)

V58 P0962A — ROB ELVN SEC ΔP 1 — −3000 TO +3000 PSID — 25 S/S — (P0963A) (P0964A) (P0965A) — 0A1 (0A2) (0A3)

V57 P0160A — RUDDER DELTA PRESS — −3000 TO +3000 PSID — 25 S/S — (P0161A) (P0162A) (P0163A) — 0A1 (0A2) (0A3)

V79 C3280A — LIB ELVN DRVR 1 OUT — −10 TO +10 MA — 25 S/S — (C3281A) (C3282A) (C3283A) — 0A1 (0A2) (0A3)

V79 C3292A — ROB ELVN DRVR 1 OUT — −10 TO +10 MA — 25 S/S — (C3293A) (C3294A) (C3295A) — 0A1 (0A2) (0A3)

V79 C3305A — RUDDER DRVR 1 OUT — −10 TO +10 MA — 25 S/S — (C3306A) (C3307A) (C3308A) — 0A1 (0A2) (0A3)

V58 P0862A — LOB ELVN SEC ΔP 1 — −3000 TO +3000 PSID — 25 S/S — (P0863A) (P0864A) (P0865A) — 0A1 (0A2) (0A3)

V58 P0912A — RIB ELVN SEC ΔP 1 — −3000 TO +3000 PSID — 25 S/S — (P0913A) (P0914A) (P0915A) — 0A1 (0A2) (0A3)

V57 P0260A — SPD BK DELTA PRESS — −3000 TO +3000 PSID — 25 S/S — (P0261A) (P0262A) (P0263A) — 0A1 (0A2) (0A3)

V79 C3284A — LOB ELVN DRVR 1 OUT — −10 TO +10 MA — 25 S/S — (C3285A) (C3286A) (C3287A) — 0A1 (0A2) (0A3)

V79 C3288A — RIB ELVN DRVR 1 OUT — −10 TO +10 MA — 25 S/S — (C3289A) (C3290A) (C3291A) — 0A1 (0A2) (0A3)

V79 C3315A — SPD BK DRVR 1 OUT — −10 TO +10 MA — 25 S/S — (C3316A) (C3317A) (C3318A) — 0A1 (0A2) (0A3)

V58 P0866C — LOB ELVN PRI ΔP — −3000 TO +3000 PSID — 12.5 S/S — (P0867C) (1 S/S) (P0868C) (1 S/S) (P0869C) (1 S/S) — FA 1 (FA 2) (FA 3) (FA 4)

V58 P0816C — LIB ELVN PRI ΔP 1 — −3000 TO +3000 PSID — 12.5 S/S — (P0817C) (1 S/S) (P0818C) (1 S/S) (P0819C) (1 S/S) — FA 1 (FA 2) (FA 3) (FA 4)

V58 P0916C — RIB ELVN PRI ΔP 1 — −3000 TO +3000 PSID — 12.5 S/S — (P0917C) (1 S/S) (P0918C) (1 S/S) (P0919C) (1 S/S) — FA 1 (FA 2) (FA 3) (FA 4)

V58 P0966C — ROB ELVN PRI ΔP 1 — −3000 TO +3000 PSID — 12.5 S/S — (P0967C) (1 S/S) (P0968C) (1 S/S) (P0969C) (1 S/S) — FA 1 (FA 2) (FA 3) (FA 4)

ASA 4
ASA 3
ASA 2
ASA 1

RUDDER
SPEED BRAKE
RIGHT OUTBOARD ELEVON
RIGHT INBOARD ELEVON
LEFT INBOARD ELEVON
LEFT OUTBOARD ELEVON

PRIMARY Δ PRESSURE (ELEVONS ONLY)
SECONDARY Δ PRESSURE
POSITION FEEDBACK
POSITION ERROR COMMAND
ISOLATE COMMAND

RIGHT OUTBOARD ELEVON ACTUATOR
RIGHT INBOARD ELEVON ACTUATOR
LEFT INBOARD ELEVON ACTUATOR
LEFT OUTBOARD ELEVON ACTUATOR

CHANNEL 4
CHANNEL 3
CHANNEL 2
CHANNEL 1

PRIMARY ΔP — LVDT — 26 VAC — KZ6
SECONDARY ΔP — LVDT — 26 VAC — KZ6
POSITION FEEDBACK — LVDT — 26 VAC — KZ6
SERVO TORQUER
ISOLATION VALVE

V77 X4550X — FCS CHANNEL FAILURE — 1=FAIL — 1 S/S — FF 3 — C&W ELECTRONICS — (AMBER) FCS CHANNEL

MML	TITLE
V79X3275X	ROB ELVN ACTR 1 FAIL
V79X3276X	ROB ELVN ACTR 2 FAIL
V79X3277X	ROB ELVN ACTR 3 FAIL
V79X3278X	ROB ELVN ACTR 4 FAIL
V79X3270X	RIB ELVN ACTR 1 FAIL
V79X3271X	RIB ELVN ACTR 2 FAIL
V79X3272X	RIB ELVN ACTR 3 FAIL
V79X3273X	RIB ELVN ACTR 4 FAIL
V79X3265X	LOB ELVN ACTR 1 FAIL
V79X3266X	LOB ELVN ACTR 2 FAIL
V79X3267X	LOB ELVN ACTR 3 FAIL
V79X3268X	LOB ELVN ACTR 4 FAIL
V79X3260X	LIB ELVN ACTR 1 FAIL
V79X3261X	LIB ELVN ACTR 2 FAIL
V79X3262X	LIB ELVN ACTR 3 FAIL
V79X3263X	LIB ELVN ACTR 4 FAIL
V79X3336X	SPD BK ACTR 1 FAIL
V79X3337X	SPD BK ACTR 2 FAIL
V79X3338X	SPD BK ACTR 3 FAIL
V79X3339X	SPD BK ACTR 4 FAIL
V79X3331X	RUDDER ACTR 1 FAIL
V79X3332X	RUDDER ACTR 2 FAIL
V79X3333X	RUDDER ACTR 3 FAIL
V79X3334X	RUDDER ACTR 4 FAIL

LEAD LAG

UP/DN INTEGRATOR — UP ~ 120±20 MSEC — DN ~ 480±80 MSEC — CLR — S Q R Q̄

REDUNDANCY/CHANNEL EQUALIZATION

LAG NETWORK — ΔP DEADBAND ±1250 PSI — LAG/LIMITER/AMPL

LO PASS FILTER — DEMOD — 400 HZ REF — KZ6

HI PASS FILTER 5HZ — 1 4MA — PRI ΔP SERVO (ELEVONS ONLY) — POSITION FEEDBACK

100 HZ REF CLK

OVERRIDE MONITOR — ΔP FAULT BYPASS — ISOLATE CMD

SERVO VALVE DRIVER — LIMITER

BYPASS MONITOR — 120 MSEC TIME DELAY — CLR

26VAC PRESENT
+15VDC PRESENT
−15VDC PRESENT
+8.5VDC PRESENT
−8.5VDC PRESENT
400 HZ REF PRSNT

SD — 28 VDC — LZ6

BODY FLAP POSITION FEEDBACK
BODY FLAP ENABLE COMMAND
BODY FLAP UP COMMAND
BODY FLAP DN COMMAND

V79 X3201E — BODY FLAP ENA 1 — 1=ON — 10 S/S — 0A1 (0A2) (0A3) — (X3204E) (X3207E)

V79 X3202E — BODY FLAP UP 1 — 1=ON — 10 S/S — 0A1 (0A2) (0A3) — (X3205E) (X3208E)

V79 X3203E — BODY FLAP DN 1 — 1=ON — 10 S/S — 0A1 (0A2) (0A3) — (X3206E) (X3209E)

BODY FLAP ACTUATOR

CHANNEL 4
CHANNEL 3
CHANNEL 2
CHANNEL 1

DOWN — UP — ENABLE — POSITION XDUCER — RVDT — 26 VAC — KZ6

RUDDER ACTUATOR
SPEED BRAKE ACTUATOR

CHANNEL 4
CHANNEL 3
CHANNEL 2
CHANNEL 1

SECONDARY ΔP — LVDT — 26 VAC — KZ6
POSITION FEEDBACK — LVDT — 26 VAC — KZ6
SERVO TORQUER
ISOLATION VALVE

9. TELEMETRY RATES DO NOT APPLY TO OPS 9

D EQUALIZATION
ELEVONS
INBOARD − 9.02 MA
OUTBOARD − 10.78 MA
RUD/SPBK − 8.25 MA
DRIVER OUTPUTS
ELEVONS − 9.0 MA
RUD/SPBK − 9.8 MA

1 CHANNELS 2, 3, AND 4 NOT ON DOWNLIST

D WHEN AN FCS CHANNEL SWITCH IS MOVED BETWEEN ANY TWO POSITIONS (I.E., AUTO TO OVERRIDE, OVERRIDE TO AUTO, OR OFF TO AUTO) THE POWER TO THE AFFECTED CHANNEL WILL BE INTERRUPTED AND THE CHANNEL WILL BE BYPASSED (FAIL MODE) FOR A MINIMUM TIME DURATION OF 510 MSEC TO A MAXIMUM TIME DURATION OF 1370 MSEC DUE TO THE BREAK-BEFORE-MAKE SWITCH CHARACTERISTICS. REF RI INTERNAL LETTER 283-220-86-009 "EFFECTS OF THE BREAK-BEFORE-MAKE DESIGN OF THE FCS CHANNEL SWITCH"

D SEE DWG 9.16 SHEET 2

D SEE DWG 9.16 SHEET 1

3 THE REDUNDANCY/CHANNEL EQUALIZATION CKT PROVIDES F/B THAT IS OUT OF PHASE WITH POSITION CMD TO NULL SYS BIASES (WHEN ΔP IS > 1250 PSI). THE LAG LIMITER/AMPL LIMITS THIS F/B TO INSURE THAT THE ΔP FAULT DETECTION RESPONDS TO REAL FAILURES

D PRIMARY PRESSURE IS ONLY USED IN THE ELEVON CIRCUITS OF THE AEROSURFACE SERVO AMPLIFIERS

NOTES: D ASA 4 BODY FLAP CHANNEL IS ONLY USED FOR BODY FLAP POSITION FEEDBACK. IT IS NOT USED TO DRIVE BODY FLAP

11 ASA SIG

SIGNATURE		DATE
DSGN	ARTHUR SEPULVEDA	6/14/78
DR	Alan L. Lefty	7/24/78
ENGR	P.E. PERKINS	8/17/90
ENGR	Phil Perkins	8/27/90
APP	Stephen J. Elsner	8/30/90
APP	John Yeamans	9/3/90
CP/PLAN	[illegible]	9-6-90
LTR	E	PCN

NATIONAL AERONAUTICS AND SPACE ADMINISTRATION
LYNDON B. JOHNSON SPACE CENTER HOUSTON, TEXAS

AERO SURFACE SIGNAL FLOW

SPACE SHUTTLE — DWG NO 9.11 — ALL — 121 X 34 — PAGE — SHEET 1 OF 1

BASIC REV E

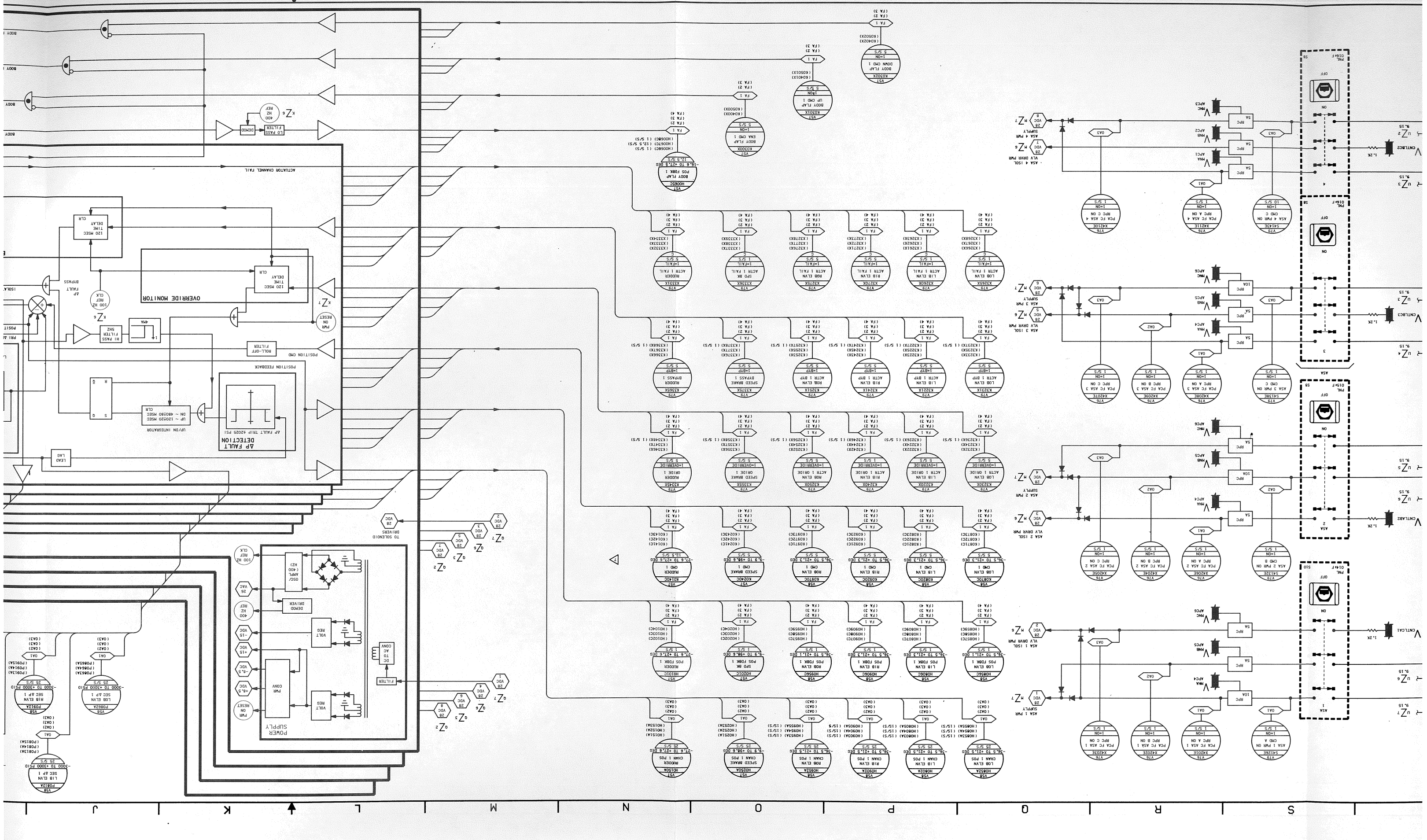
ACTUATOR CHANNEL FAIL
OVERRIDE MONITOR
AP FAULT DETECTION
POSITION CMD
POSITION FEEDBACK
UP/DN INTEGRATOR
POWER SUPPLY
TO SOLENOID DRIVERS
ASA 1 PWR ON CMD C
ASA 2 PWR ON CMD B
ASA 3 PWR ON CMD A
ASA 4 PWR ON CMD C
ASA 1 PWR ON RPC C ON
ASA 2 PWR ON RPC C ON
ASA 3 PWR ON RPC B ON
ASA 4 PWR ON RPC A ON
ASA 1 ISOL VLV OVRD PWR
ASA 2 ISOL VLV OVRD PWR
ASA 3 ISOL VLV OVRD PWR
ASA 4 ISOL VLV OVRD PWR
ASA 1 PWR SUPPLY
ASA 2 PWR SUPPLY
ASA 3 PWR SUPPLY
ASA 4 PWR SUPPLY
CNTLBC1
CNTLBC2
CNTLBC3
CNTLAS1
CNTLAS2
CNTLAS3
ASA 1
ASA 2
ASA 3
PNL 01AS F
PNL 01BS F
PNL 01CS F
PNL 01DS F
ON
OFF
LOAD ELVN ACTR 1 BYP
RIB ELVN ACTR 1 BYP
LIB ELVN ACTR 1 BYP
ROB ELVN ACTR 1 BYP
SPEED BRAKE BYPASS 1
RUDDER BYPASS 1
LOAD ELVN ACTR 1 OVRIDE
RIB ELVN ACTR 1 OVRIDE
LIB ELVN ACTR 1 OVRIDE
ROB ELVN ACTR 1 OVRIDE
SPEED BRAKE OVRIDE 1
RUDDER OVRIDE 1
LOAD ELVN CHAN 1 POS
RIB ELVN CHAN 1 POS
LIB ELVN CHAN 1 POS
ROB ELVN CHAN 1 POS
SPEED BRAKE CHAN 1 POS
RUDDER CHAN 1 POS
LOAD ELVN POS PDBK 1
RIB ELVN POS PDBK 1
LIB ELVN POS PDBK 1
ROB ELVN POS PDBK 1
SPD BK POS PDBK 1
RUDDER POS PDBK 1
PCA FC ASA 1 RPC C ON
PCA FC ASA 2 RPC C ON
PCA FC ASA 3 RPC A ON
PCA FC ASA 4 RPC C ON
PCA FC ASA 3 RPC B ON
PCA FC ASA 4 RPC B ON
ASA 1 PWR ON CMD C
ASA 2 PWR ON CMD B
ASA 3 PWR ON CMD A
ASA 4 PWR ON CMD C
LOAD ELVN ACTR 1 FAIL
RIB ELVN ACTR 1 FAIL
LIB ELVN ACTR 1 FAIL
ROB ELVN ACTR 1 FAIL
SPD BK ACTR 1 FAIL
RUDDER ACTR 1 FAIL
BOOT FLAP UP CMD 1
BOOT FLAP DOWN CMD 1
BOOT FLAP ENA CMD 1
BOOT FLAP POS PDBK 1
16.6 TO +27.5 DEG
12.5 S/S
LO PASS FILTER
DEMOD
400 HZ REF
OSC/ AMPL (400 HZ)
DEMOD DRIVER
VOLT REG
PWR CONV
PWR ON RESET
DC TO AC CONV
FILTER
LEAD LAG
120 MSEC TIME DELAY
100 HZ REF CLK
HI PASS FILTER SHZ
AP FAULT
BYPASS
ROLL-OFF FILTER
UP ~ 120520 MSEC
DN ~ 480280 MSEC
CLR
SET
R
S
Q
LOAD ELVN SEC AP 1
RIB ELVN SEC AP 1
-3000 TO +3000 PSID
25 S/S
-5 VDC
+5 VDC
-15 VDC
+15 VDC
28 VAC
28 VDC
4MA
1.2K
9.15

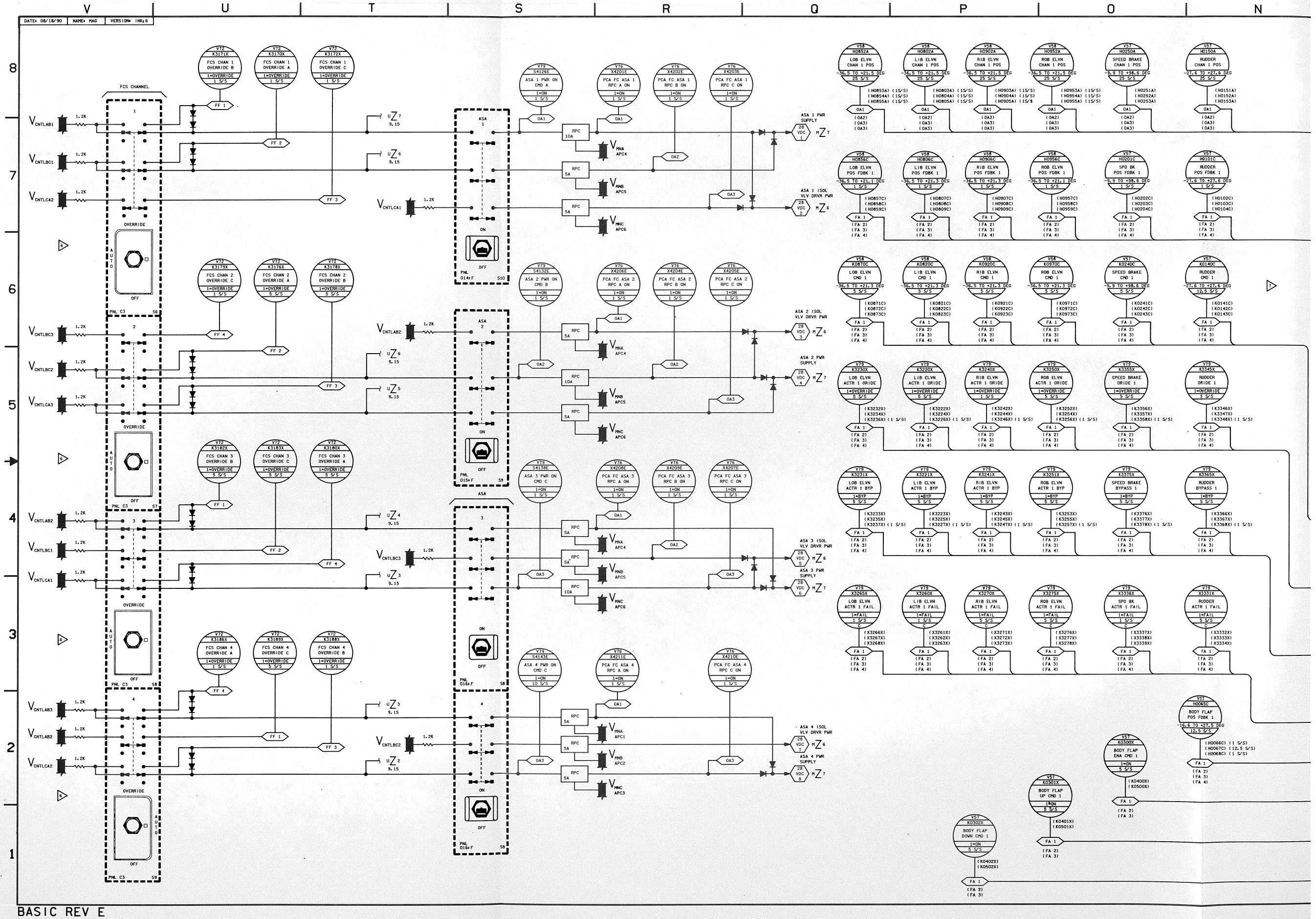
DATE: 08/18/90
NAME: MAG
VERSION: INK 6
V U T S R Q P O N
8 7 6 5 4 3 2 1
FCS CHANNEL
V72 K3171X FCS CHAN 1 OVERRIDE B 1=OVERRIDE 1 S/S FF 1
V72 K3170X FCS CHAN 1 OVERRIDE A 1=OVERRIDE 1 S/S FF 2
V72 K3172X FCS CHAN 1 OVERRIDE C 1=OVERRIDE 1 S/S FF 3
V72 K3179X FCS CHAN 2 OVERRIDE C 1=OVERRIDE 1 S/S FF 4
V72 K3176X FCS CHAN 2 OVERRIDE A 1=OVERRIDE 5 S/S FF 2
V72 K3178X FCS CHAN 2 OVERRIDE B 1=OVERRIDE 5 S/S FF 3
V72 K3182X FCS CHAN 3 OVERRIDE B 1=OVERRIDE 5 S/S FF 1
V72 K3183X FCS CHAN 3 OVERRIDE C 1=OVERRIDE 5 S/S FF 2
V72 K3180X FCS CHAN 3 OVERRIDE A 1=OVERRIDE 5 S/S FF 4
V72 K3186X FCS CHAN 4 OVERRIDE A 1=OVERRIDE 1 S/S FF 4
V72 K3185X FCS CHAN 4 OVERRIDE C 1=OVERRIDE 5 S/S FF 1
V72 K3188X FCS CHAN 4 OVERRIDE B 1=OVERRIDE 1 S/S FF 3
V79 S4126E ASA 1 PWR ON CMD A 1=ON 1 S/S
V79 S4132E ASA 2 PWR ON CMD B 1=ON 1 S/S
V79 S4138E ASA 3 PWR ON CMD C 1=ON 1 S/S
V79 S4143E ASA 4 PWR ON CMD C 1=ON 10 S/S
V76 X4201E PCA FC ASA 1 RPC A ON 1=ON 1 S/S
V76 X4202E PCA FC ASA 1 RPC B ON 1=ON 1 S/S
V76 X4203E PCA FC ASA 1 RPC C ON 1=ON 1 S/S
V76 X4206E PCA FC ASA 2 RPC A ON 1=ON 1 S/S
V76 X4204E PCA FC ASA 2 RPC B ON 1=ON 1 S/S
V76 X4205E PCA FC ASA 2 RPC C ON 1=ON 1 S/S
V76 X4208E PCA FC ASA 3 RPC A ON 1=ON 1 S/S
V76 X4209E PCA FC ASA 3 RPC B ON 1=ON 1 S/S
V76 X4207E PCA FC ASA 3 RPC C ON 1=ON 1 S/S
V76 X4211E PCA FC ASA 4 RPC A ON 1=ON 1 S/S
V76 X4210E PCA FC ASA 4 RPC C ON 1=ON 1 S/S
ASA 1
ASA 2
ASA
ASA
ON
OFF
PNL 014F S10
PNL 015F S9
PNL 016F S8
PNL 016F S9
RPC 10A
RPC 5A
ASA 1 PWR SUPPLY
ASA 1 ISOL VLV DRVR PWR
ASA 2 ISOL VLV DRVR PWR
ASA 2 PWR SUPPLY
ASA 3 ISOL VLV DRVR PWR
ASA 3 PWR SUPPLY
ASA 4 ISOL VLV DRVR PWR
ASA 4 PWR SUPPLY
28 VDC 1
28 VDC 2
28 VDC 3
28 VDC 4
28 VDC 5
28 VDC 6
OVERRIDE
AUTO
OFF
PNL C3 S6
PNL C3 S7
PNL C3 S8
PNL C3 S9
1.2K
V72 K3171X FCS CHAN 1 OVERRIDE B 1=OVERRIDE 1 S/S
V72 K3170X FCS CHAN 1 OVERRIDE A 1=OVERRIDE 1 S/S
V72 K3172X FCS CHAN 1 OVERRIDE C 1=OVERRIDE 1 S/S
V72 K3179X FCS CHAN 2 OVERRIDE C 1=OVERRIDE 1 S/S
V72 K3176X FCS CHAN 2 OVERRIDE A 1=OVERRIDE 5 S/S
V72 K3178X FCS CHAN 2 OVERRIDE B 1=OVERRIDE 5 S/S
V72 K3182X FCS CHAN 3 OVERRIDE B 1=OVERRIDE 5 S/S
V72 K3183X FCS CHAN 3 OVERRIDE C 1=OVERRIDE 5 S/S
V72 K3180X FCS CHAN 3 OVERRIDE A 1=OVERRIDE 5 S/S
V72 K3186X FCS CHAN 4 OVERRIDE A 1=OVERRIDE 1 S/S
V72 K3185X FCS CHAN 4 OVERRIDE C 1=OVERRIDE 5 S/S
V72 K3188X FCS CHAN 4 OVERRIDE B 1=OVERRIDE 1 S/S
V58 H0852A LOB ELVN CHAN 1 POS -36.5 TO +21.5 DEG 25 S/S
V58 H0802A LIB ELVN CHAN 1 POS -36.5 TO +21.5 DEG 25 S/S
V58 H0902A RIB ELVN CHAN 1 POS -36.5 TO +21.5 DEG 25 S/S
V58 H0952A ROB ELVN CHAN 1 POS -36.5 TO +21.5 DEG 25 S/S
V57 H0250A SPEED BRAKE CHAN 1 POS -9.9 TO +98.6 DEG 25 S/S
V57 H0150A RUDDER CHAN 1 POS -27.6 TO +27.6 DEG 25 S/S
V58 H0856C LOB ELVN POS FDBK 1 -36.5 TO +21.1 DEG 1 S/S
V58 H0806C LIB ELVN POS FDBK 1 -36.5 TO +21.3 DEG 1 S/S
V58 H0906C RIB ELVN POS FDBK 1 -36.5 TO +21.3 DEG 1 S/S
V58 H0956C ROB ELVN POS FDBK 1 -36.5 TO +21.1 DEG 1 S/S
V57 H0201C SPD BK POS FDBK 1 -9.9 TO +98.6 DEG 1 S/S
V57 H0101C RUDDER POS FDBK 1 -27.6 TO +27.6 DEG 1 S/S
V58 K0870C LOB ELVN CMD 1 -36.5 TO +21.3 DEG 5 S/S
V58 K0820C LIB ELVN CMD 1 -36.5 TO +21.3 DEG 5 S/S
V58 K0920C RIB ELVN CMD 1 -36.5 TO +21.3 DEG 5 S/S
V58 K0970C ROB ELVN CMD 1 -36.5 TO +21.3 DEG 5 S/S
V57 K0240C SPEED BRAKE CMD 1 -9.9 TO +98.6 DEG 5 S/S
V57 K0140C RUDDER CMD 1 -27.6 TO +27.6 DEG 10.5 S/S
V78 K3210X LOB ELVN ACTR 1 ORIDE 1=OVERRIDE 5 S/S
V78 K3220X LIB ELVN ACTR 1 ORIDE 1=OVERRIDE 5 S/S
V78 K3240X RIB ELVN ACTR 1 ORIDE 1=OVERRIDE 5 S/S
V78 K3250X ROB ELVN ACTR 1 ORIDE 1=OVERRIDE 5 S/S
V75 K3355X SPEED BRAKE ORIDE 1 1=OVERRIDE 5 S/S
V78 K3345X RUDDER ORIDE 1 1=OVERRIDE 5 S/S
V78 K3231X LOB ELVN ACTR 1 BYP 1=BYP 5 S/S
V78 K3221X LIB ELVN ACTR 1 BYP 1=BYP 5 S/S
V78 K3241X RIB ELVN ACTR 1 BYP 1=BYP 5 S/S
V78 K3251X ROB ELVN ACTR 1 BYP 1=BYP 5 S/S
V75 K3375X SPEED BRAKE BYPASS 1 1=BYP 5 S/S
V78 K3365X RUDDER BYPASS 1 1=BYP 5 S/S
V78 K3265X LOB ELVN ACTR 1 FAIL 1=FAIL 1 S/S C
V78 K3260X LIB ELVN ACTR 1 FAIL 1=FAIL 1 S/S C
V78 K3270X RIB ELVN ACTR 1 FAIL 1=FAIL 5 S/S C
V78 K3275X ROB ELVN ACTR 1 FAIL 1=FAIL 5 S/S C
V75 K3336X SPD BK ACTR 1 FAIL 1=FAIL 1 S/S C
V78 K3331X RUDDER ACTR 1 FAIL 1=FAIL 5 S/S C
V57 HXX45D BODY FLAP POS FDBK 1 -16.6 TO +27.5 DEG 12.5 S/S
V57 K0300X BODY FLAP ENA CMD 1 1=ON 5 S/S
V57 K0301X BODY FLAP UP CMD 1 1=ON 5 S/S
V57 K0302X BODY FLAP DOWN CMD 1 1=ON 5 S/S
FA 1
FA 2
FA 3
FA 4
OA1
OA2
OA3

BASIC REV E

DATE: 08/10/95	NAME: JMB	VERSION: BPT.6
DATE: 08/14/95	NAME: LAM	VERSION: INK.11
DATE: 07/25/96	NAME: MDU	VERSION: INK.12

LEFT OMS TVC
RIGHT OMS TVC

SECONDARY YAW
SECONDARY PITCH
PRIMARY YAW
PRIMARY PITCH

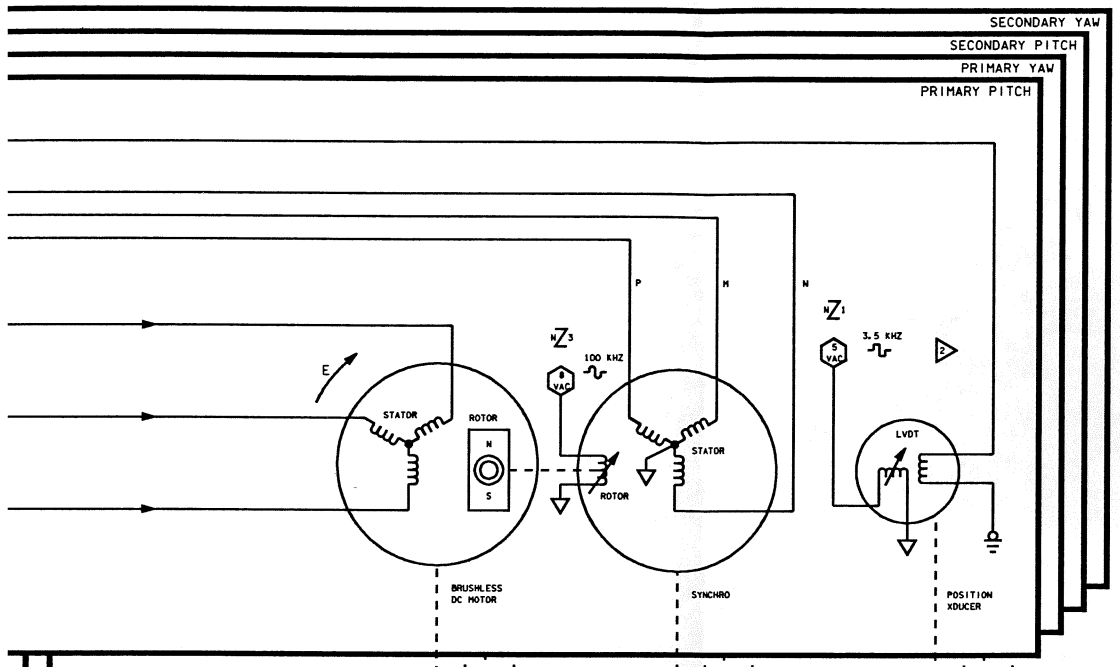

YAW ACTUATOR
PITCH ACTUATOR

SEC PITCH MOTOR (6)
SEC PITCH SYN (7)
SEC PITCH POSITION XDUCER (8)

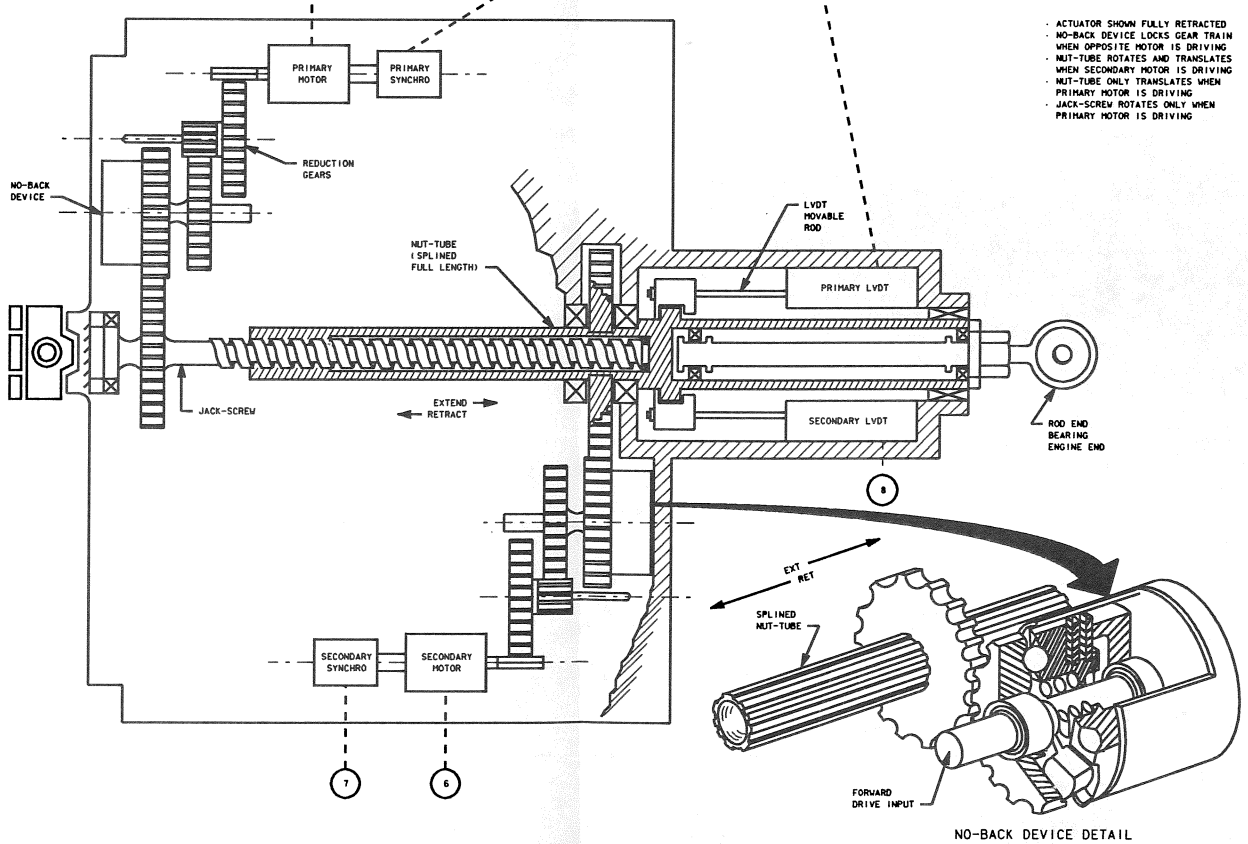

NO-BACK DEVICE DETAIL

- ACTUATOR SHOWN FULLY RETRACTED
- NO-BACK DEVICE LOCKS GEAR TRAIN WHEN OPPOSITE MOTOR IS DRIVING
- NUT-TUBE ROTATES AND TRANSLATES WHEN SECONDARY MOTOR IS DRIVING
- NUT-TUBE ONLY TRANSLATES WHEN PRIMARY MOTOR IS DRIVING
- JACK-SCREW ROTATES ONLY WHEN PRIMARY MOTOR IS DRIVING

RIGHT OMS ENGINE

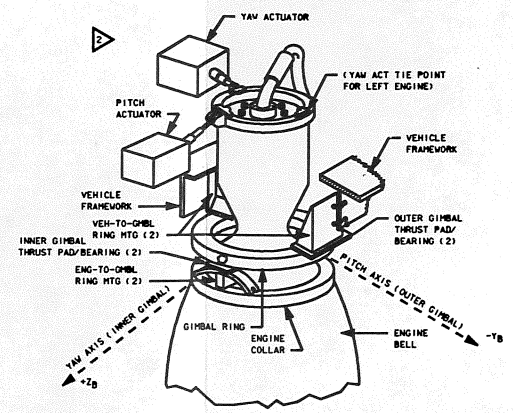

GIMBAL NULL MOUNTING ANGLES AND DEFLECTION RANGE

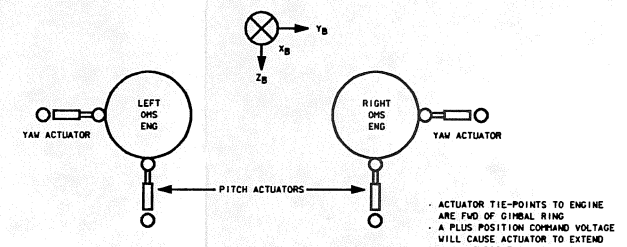

- ACTUATOR TIE-POINTS TO ENGINE ARE FWD OF GIMBAL RING
- A PLUS POSITION COMMAND VOLTAGE WILL CAUSE ACTUATOR TO EXTEND
- A MINUS POSITION COMMAND VOLTAGE WILL CAUSE ACTUATOR TO RETRACT

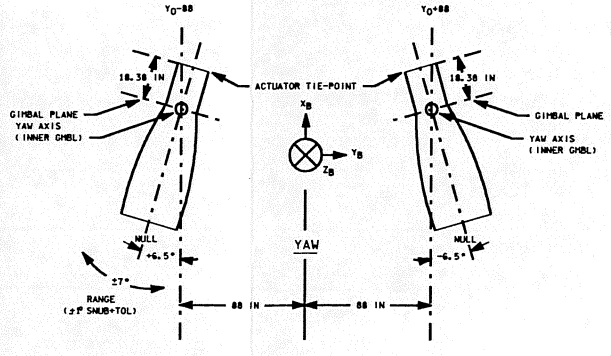

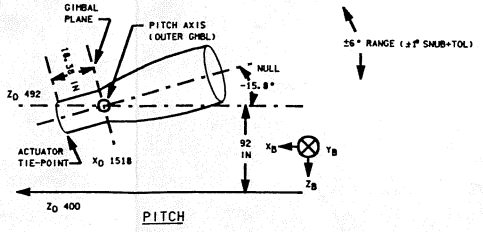

PITCH

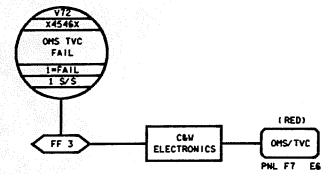

PML NO	TITLE
V90X7677X	L OMS P GMBL FL FLAG
V90X7678X	R OMS P GMBL FL FLAG
V90X7679X	L OMS Y GMBL FL FLAG
V90X7680X	R OMS Y GMBL FL FLAG

NOTES:

1. EACH TVC SYSTEM (PRI OR SEC) REQUIRES BOTH RPC'S (RPC'S ARE NOT REDUNDANT POWER SOURCES). EACH AXIS REQUIRES A MAXIMUM OF 6.5 AMPS (182 WATTS).
2. EACH TVC CONSISTS OF TWO CONTROLLERS. THE PRIMARY CONTROLLER DRIVES THE PRIMARY PITCH AND YAW. THE SECONDARY CONTROLLER DRIVES THE SECONDARY PITCH AND YAW
3. WHEN 8 SEC (±1 SEC) TIMER TIMES OUT, THE CURRENT LIMITER THRESHOLD VALUE CHANGES FROM 10 AMPS TO A VALUE EQUAL TO 25 PERCENT OF NORMAL POWER TO MOTOR.
4. THE SAMPLE RATE IS 25 S/S IN OPS 8 12.5 S/S IN OPS 9 AND 1 S/S IN OPS 2
5. THE SAMPLE RATE IS 25 S/S IN OPS 8
6. ACTUATOR MOVEMENT IN ONE AXIS CAUSES A SMALL MOVEMENT OF THE ENGINE POSITION IN THE OTHER AXIS WHICH DOES NOT SHOW IN THE POSITION TRANSDUCER OUTPUT BECAUSE THE TRANSDUCER IS MEASURING ACTUATOR LENGTH AND NOT THE ENGINE GIMBAL ANGLE
7. GIMBAL ACTUATOR PERFORMANCE DATA

			INCHES	DEGREES
STROKE:	PITCH		3.79	26
	YAW		4.38	27
HYSTERESIS:	DEADZONE		.125	.4
	HYSTERESIS		.1	.336
ACCELERATION:		20.7 IN/SEC²	MIN	57.3 IN/SEC²
RATE:		1.1 IN/SEC	MIN	3 IN/SEC

13 OMS/TVC & DR

SIGNATURE	DATE	NATIONAL AERONAUTICS AND SPACE ADMINISTRATION LYNDON B. JOHNSON SPACE CENTER HOUSTON, TEXAS
DSGN L. BUCHANAN	7/24/79	
DR		
ENGR E. LIEBMAN		OMS/TVC SIGNAL FLOW AND DRIVERS
ENGR	7/24/96	
APP	7/24/96	
APP	7/24/96	SPACE SHUTTLE — DWG NO 9.13
CADS	7-29-96	ALL
LTR E — PCN 6		104.5 X 34 — PAGE — SHEET 1 OF 1

BASIC REV E-6

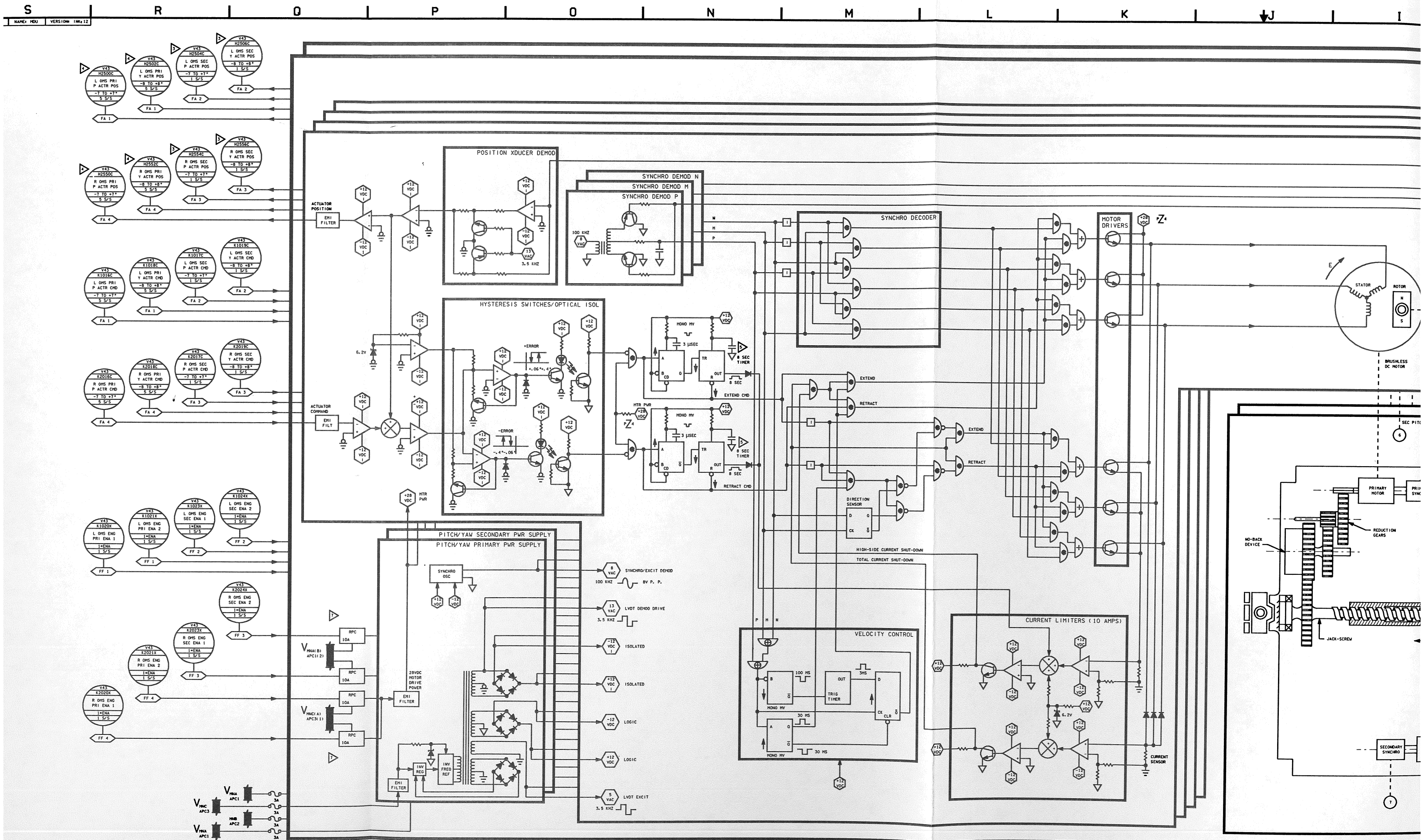

S
R
Q
P
O
N
M
L
K
J
I
NAME: MDU
VERSION: INK:12
POSITION XDUCER DEMOD
SYNCHRO DEMOD N
SYNCHRO DEMOD M
SYNCHRO DEMOD P
SYNCHRO DECODER
MOTOR DRIVERS
HYSTERESIS SWITCHES/OPTICAL ISOL
PITCH/YAW SECONDARY PWR SUPPLY
PITCH/YAW PRIMARY PWR SUPPLY
VELOCITY CONTROL
CURRENT LIMITERS (10 AMPS)
ACTUATOR POSITION
ACTUATOR COMMAND
EMI FILTER
EXTEND
RETRACT
DIRECTION SENSOR
HIGH-SIDE CURRENT SHUT-DOWN
TOTAL CURRENT SHUT-DOWN
CURRENT SENSOR
SYNCHRO OSC
SYNCHRO/EXCIT DEMOD
LVDT DEMOD DRIVE
ISOLATED
LOGIC
LVDT EXCIT
28VDC MOTOR DRIVE POWER
STATOR
ROTOR
BRUSHLESS DC MOTOR
PRIMARY MOTOR
REDUCTION GEARS
NO-BACK DEVICE
JACK-SCREW
SECONDARY SYNCHRO

REV E-6

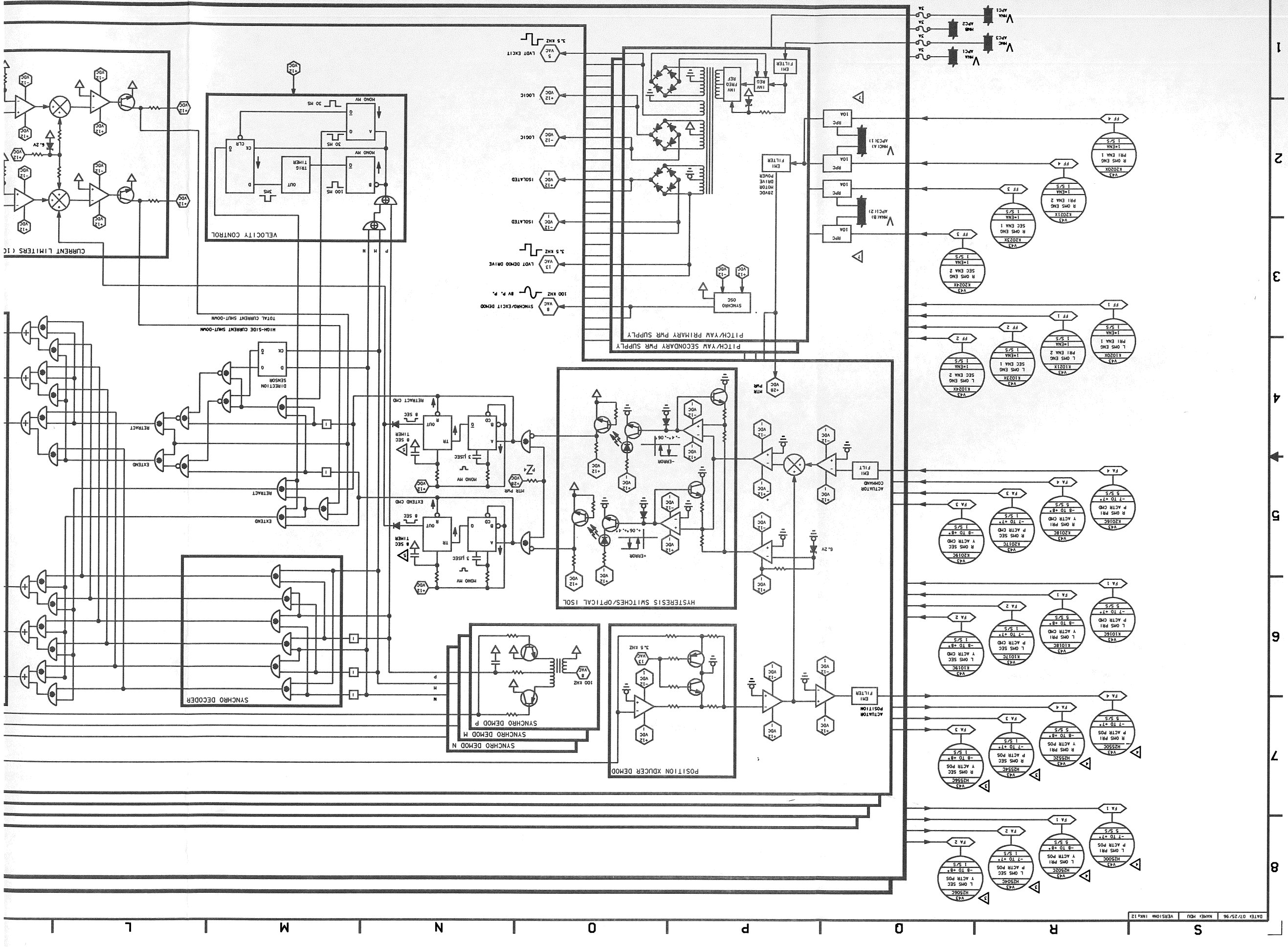
CURRENT LIMITERS (IC
VELOCITY CONTROL
MONO MV
30 MS
100 MS
3MS
TRIG TIMER
CLR
PITCH/YAW PRIMARY PWR SUPPLY
PITCH/YAW SECONDARY PWR SUPPLY
SYNCHRO OSC
28VDC MOTOR DRIVE POWER
INV FDBD REF
INV REG
EMI FILTER
RFC
10A
VMAC AFC1
VMAC AFC2
VMAC AFC3
VMAC AFC4
VMAC AFC5
VMAC AFC6
VMAC AFC7
VMAC AFC8
VMAC AFC9
VMAC AFC10
VMAC AFC11
VMAC AFC12
VMAC AFC13
VMAC AFC14
VMAC AFC15
VMAC AFC16
VMAC AFC17
VMAC AFC18
VMAC AFC19
VMAC AFC20
VMAC

DATE: 08/29/90	NAME: MDU	VERSION: INR: 2
DATE: 02/12/96	NAME: LAM	VERSION: BPT: 8
DATE: 02/15/96	NAME: BJB	VERSION: INR: 3

RIGHT SRB TILT ACTUATOR
RIGHT SRB ROCK ACTUATOR
LEFT SRB TILT ACTUATOR
LEFT SRB ROCK ACTUATOR
CHANNELS 1 AND 2
CHANNELS 3 AND 4

$^{C}Z_1$ 9.15 SRB SEC ΔP
$^{C}Z_1$ 9.15 SRB ISOLATE CMD
$^{C}Z_2$ 9.15 SRB ACTR DRIVER
$^{C}Z_2$ 9.15 SRB ACTR DRIVER
$^{C}Z_1$ 9.15 SRB ISOLATE CMD

DYNAMIC PRESSURE FEEDBACK
DYNAMIC PRESSURE FEEDBACK
MECHANICAL POSITION FEEDBACK LINKAGE
MECHANICAL POSITION FEEDBACK SPRING CAGE ASSEMBLY
+MA
+MA
PIVOT
PIVOT
SERVOVALVE 3(1)
SERVO VALVE 4 (2)
15μ
R
R
$^{H}Z_1$ 9.15 28 VAC B
LVDT
$^{H}Z_1$ 9.15 28 VAC B
LVDT
BYPASS VALVE
BYPASS VALVE
POWER VALVE FEEDBACK WIRE
POWER VALVE FEEDBACK WIRE
SECONDARY ΔP
SECONDARY ΔP
POWER VALVE
LOCK VALVE
DEVELOPMENT FLIGHT INSTRUMENTATION
PRIMARY ΔP
EXTEND
SPRING
STRAIN GAGE POSITION TRANSDUCER
LINEAR SINGLE BALANCED ACTUATOR

NDARY
ARY
PRI R
SEC R
HYD SWITCHING VALVE
PRI
SEC
PRI R
TRANSIENT LOAD RELIEF MECHANISM

ACTUATOR OUTBOARD SUPPORT BRACKETS
KICK RING
SRB NOZZLE ATTACHED BY FLEX BEARING
ACTUATOR INBOARD SUPPORT BRACKETS
COMPLIANCE RING NOZZLE
ELECTRICAL BONDING STRAP
ROTATED 45° CW.
NOZZLE SEVERENCE PYROTECHNICS
SRB GIMBAL ACTUATOR

SRB TVC HYDRAULIC SWITCHING VALVE ASSIGNMENT

	LEFT SRB		RIGHT SRB	
	PRI	SEC	PRI	SEC
ROCK	HYD SYS A	HYD SYS B	HYD SYS A	HYD SYS B
TILT	HYD SYS B	HYD SYS A	HYD SYS B	HYD SYS A

SRB ENGINE PIVOT LOCATION

	LEFT	RIGHT
$^{X}_{O}$	1665.5	1665.5
$^{Y}_{O}$	-250.5	250.5
$^{Z}_{O}$	63.5	63.5

$^{C}Z_1$ 9.15 SRB SEC ΔP

12. THIS TABLE PROVIDES ACTUATOR PISTON STROKE (SHOWN IN INCHES) CORRESPONDING GIMBAL DEFLECTION (IN DEGREES) AND DRIVER OUTPUT (MA) FOR CENTER OF STROKE AND BOTH POSITIVE AND NEGATIVE SOFTWARE LIMITS

12. THE SRB TVC POSITION TRANSDUCERS ARE POWERED BY THE A4 SIGNAL CONDITIONER IN THE SRB POWER DISTRIBUTION SYSTEM. THE A4 SIGNAL CONDITIONER IN TURN IS REDUNDANTLY POWERED BY PMA AND PMB ORBITER MAIN BUSES. HOWEVER THE TWO SRB MAIN BUSES A AND B RECEIVE POWER FROM PMA APC 1 AND PMB APC2 RESPECTIVELY (REF SSSH DWG 2.2 SHEET 2, F,6 $^{Z}_{2}$, 1)

12. THE DEVELOPMENT FLIGHT INSTRUMENTATION (DFI) IS NOT CURRENTLY BEING USED

12. RESERVED

12. ANGLE ROTATIONS ARE MEASURED FROM ORBITER BODY AXIS TO NULL POSITION

12. SSME PRIMARY SYSTEM DRIVES THE ACTUATOR UNTIL THE PRIMARY SYSTEM PRESSURE DROPS BELOW 1200 - 1500 PSI

13. MINIMUM ME GIMBAL RATE 10 DEG/SEC

12. HYD FLUID EXPANSION RATE 4 PER CENT/100 DEG F BY VOLUME

12. SRB LOCK VALVE HAS A BYPASS POSITION (NOT SHOWN ON DWG) THAT WHEN OPERATED BY GROUND CREWS, WILL INTERCONNECT ALL FOUR POWER VALVE AND ACTUATOR PORTS

12. CENTER, LEFT AND RIGHT ME'S ARE SOMETIMES CALLED ME'S 1, 2 AND 3 RESPECTIVELY

12. HYD SWITCHING VALVE WILL AUTOMATICALLY SWITCH TO THE SECONDARY POSITION WHEN THE PRIMARY PRESSURE DROPS TO LESS THAN 2050 PSIG ±150 PSIG AT ZERO FLOW

12. SRB TRANSIENT LOAD RELIEF MECH WILL ACTUATE AT HYD PRESSURE GREATER THAN 3600 PSID AND BYPASS FLOW WILL BE PROPORTIONAL TO THE DIFFERENTIAL PRESSURE ABOVE 3600 PSIG

7. ALL SPRING LOADED DEVICES ARE SHOWN IN THE DE-ENERGIZED AND UNPRESSURIZED POSITION. HYDRAULIC RETURN LINES ARE IDENTIFIED WITH AN "R". SOURCE PRESS IS ≈ 3000 PSIG

12. BYPASS VALVE SPOOL PRE-LOAD RETURN SPRING IS EQUAL TO 300 PSI

12. SRB LOCK VALVE ACTUATES TO THE LOCKED POSITION WHEN THE SYSTEM PRESSURE FALLS TO BETWEEN 1000 TO 600 PSIG. THE VALVE ACTUATES TO THE UNLOCKED POSITION WHEN SYSTEM PRESSURE IS GREATER THAN 1000 PSIG

12. THE LOCK VALVE FOR THE ME'S SHALL ACTUATE TO THE LOCKED POSITION WHEN SYSTEM PRESSURE IS 600 PLUS 100, MINUS 0.0 PSID. THE VALVE SHALL ACTUATE TO THE UNLOCKED POSITION WHEN SYSTEM PRESSURE IS NO GREATER THAN 2000 PSIG
*****

12. THE FORCE LIMITER SHALL LIMIT THE INTERNAL CYLINDER PRESSURE TO 4050 PSIG

12. FILTER CONTAINS A VISUAL DIFFERENTIAL PRESSURE INDICATOR

NOTES: 12. A PLUS CURRENT TO THE ELECTRO-HYDRAULIC SERVO VALVES WILL CAUSE THE ACTUATOR TO EXTEND AND THE + → SHOW THE INITIAL MOVEMENT DIRECTION OF THE HYD SPOOLS AND MECHANICAL LINKAGE

14 ATVC ACTRS

SIGNATURE		DATE	NATIONAL AERONAUTICS AND SPACE ADMINISTRATION LYNDON B. JOHNSON SPACE CENTER HOUSTON, TEXAS
DSGN	L. M. BUCHANAN	12/17/75	
DR			ME AND SRB TVC ACTUATORS
ENGR	D. MARQUETTE		
ENGR	D. MARQUETTE 2/29/96		
APP	[illegible] 4/25/96		
APP	[illegible] 2/29/96	SPACE SHUTTLE	DWG NO 9.14
CADS	S.V. Kemlein 7-15-96	ALL	
LTR E	PCN 6	126.5 X 34	PAGE SHEET 1 OF 1

BASIC REV E-6

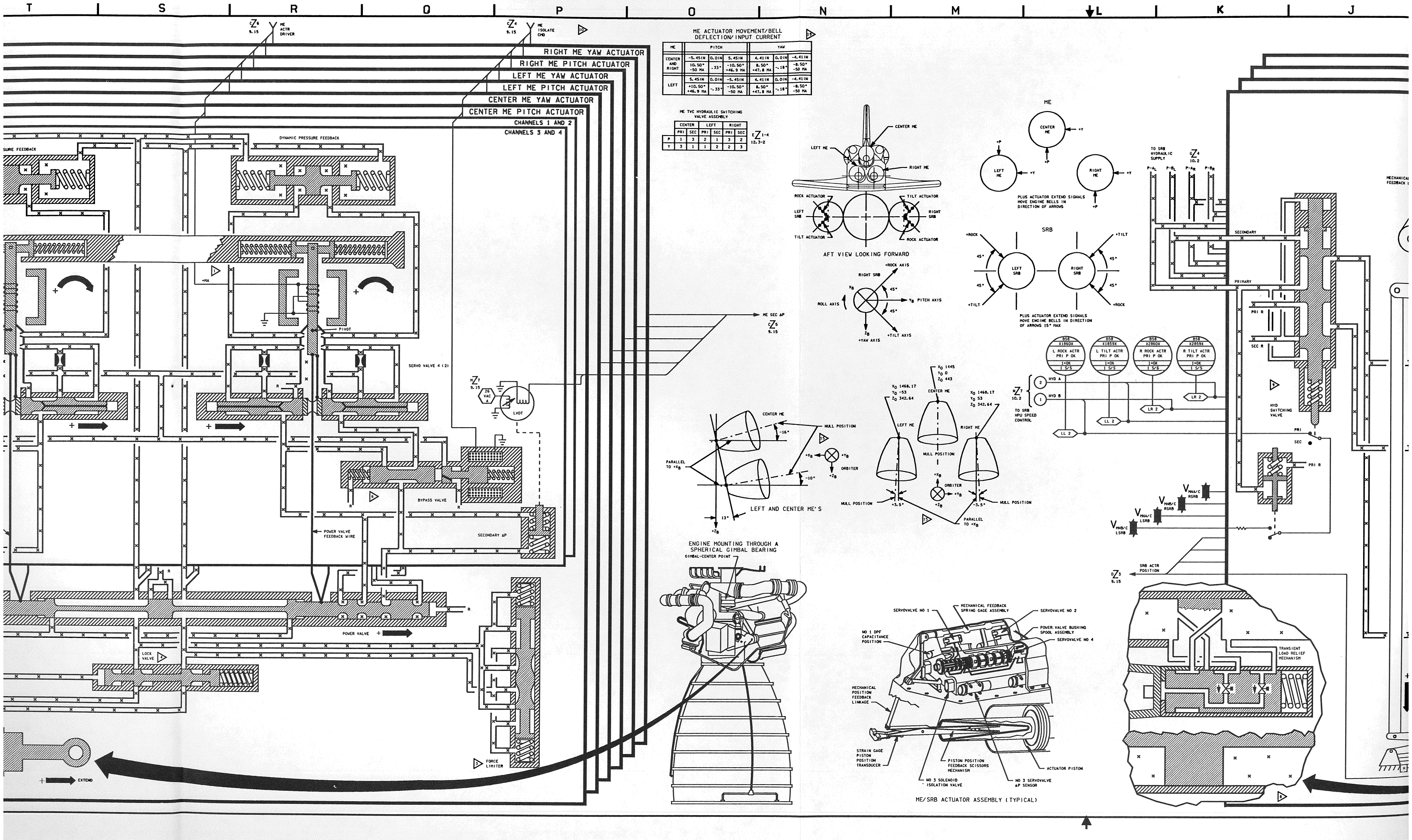

T S R Q P O N M L K J
RIGHT ME YAW ACTUATOR
RIGHT ME PITCH ACTUATOR
LEFT ME YAW ACTUATOR
LEFT ME PITCH ACTUATOR
CENTER ME YAW ACTUATOR
CENTER ME PITCH ACTUATOR
CHANNELS 1 AND 2
CHANNELS 3 AND 4
ME ACTR DRIVER
ME ISOLATE CMD
DYNAMIC PRESSURE FEEDBACK
SERVO VALVE 4 (2)
PIVOT
BYPASS VALVE
SECONDARY ΔP
POWER VALVE FEEDBACK WIRE
POWER VALVE
LOCK VALVE
FORCE LIMITER
EXTEND
ME SEC ΔP
LVDT
ME ACTUATOR MOVEMENT/BELL DEFLECTION/INPUT CURRENT
ME TVC HYDRAULIC SWITCHING VALVE ASSEMBLY
CENTER ME
LEFT ME
RIGHT ME
ROCK ACTUATOR
TILT ACTUATOR
LEFT SRB
RIGHT SRB
AFT VIEW LOOKING FORWARD
ROLL AXIS
PITCH AXIS
+ROCK AXIS
+TILT AXIS
+YAW AXIS
ME
PLUS ACTUATOR EXTEND SIGNALS MOVE ENGINE BELLS IN DIRECTION OF ARROWS
SRB
PLUS ACTUATOR EXTEND SIGNALS MOVE ENGINE BELLS IN DIRECTION OF ARROWS ±5° MAX
TO SRB HYDRAULIC SUPPLY
SECONDARY
PRIMARY
HYD SWITCHING VALVE
TO SRB HPU SPEED CONTROL
L ROCK ACTR PRI P OK
L TILT ACTR PRI P OK
R ROCK ACTR PRI P OK
R TILT ACTR PRI P OK
LEFT AND CENTER ME'S
NULL POSITION
ORBITER
PARALLEL TO +XB
ENGINE MOUNTING THROUGH A SPHERICAL GIMBAL BEARING
GIMBAL-CENTER POINT
SERVOVALVE NO 1
MECHANICAL FEEDBACK SPRING GAGE ASSEMBLY
SERVOVALVE NO 2
POWER VALVE BUSHING SPOOL ASSEMBLY
SERVOVALVE NO 4
NO 1 DPF CAPACITANCE POSITION
MECHANICAL POSITION FEEDBACK LINKAGE
STRAIN GAGE PISTON POSITION TRANSDUCER
PISTON POSITION FEEDBACK SCISSORS MECHANISM
NO 3 SOLENOID ISOLATION VALVE
NO 3 SERVOVALVE ΔP SENSOR
ACTUATOR PISTON
ME/SRB ACTUATOR ASSEMBLY (TYPICAL)
SRB ACTR POSITION
TRANSIENT LOAD RELIEF MECHANISM

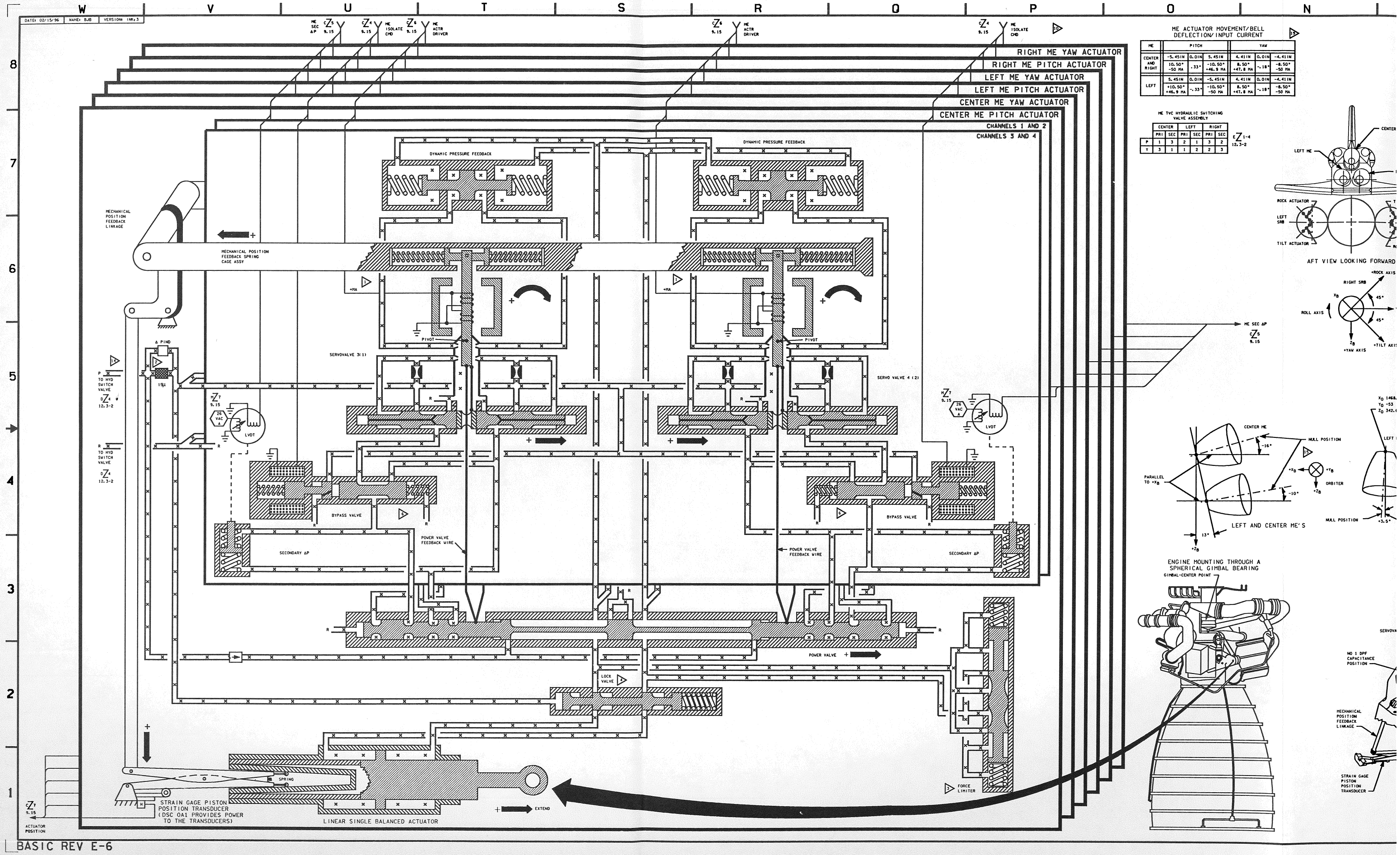

ME	PITCH			YAW		
CENTER AND RIGHT	-5.45IN	0.0IN	5.45IN	4.41IN	0.0IN	-4.41IN
	10.50° -50 MA	.33°	-10.50° +46.9 MA	8.50° +47.8 MA	-.18°	-8.50° -50 MA
LEFT	5.45IN	0.0IN	-5.45IN	4.41IN	0.0IN	-4.41IN
	+10.50° +46.9 MA	-.33°	-10.50° -50 MA	8.50° +47.8 MA	-.18°	-8.50° -50 MA

	CENTER		LEFT		RIGHT	
	PRI	SEC	PRI	SEC	PRI	SEC
P	1	3	2	1	3	2
Y	3	1	1	2	2	3

BASIC REV E-6

DATE: 8/26/87	NAME: MAG	VERSION#: INK: 3
DATE: 8/23/90	NAME: MDU	VERSION#: INK: 4
DATE: 09/04/90	NAME: LAM	VERSION#: INK: 5

K J I H G F E D C B A

8 7 6 5 4 3 2 1

V58 P1288A LEFT ME Y SEC ΔP A -3042 TO +3042 PSID 25 S/S (P1287A) (P1288A) (P1289A)

V58 P1381A RIGHT ME P SEC ΔP A -3042 TO +3042 PSID 25 S/S (P1382A) (P1383A) (P1384A)

V58 P1386A RIGHT ME Y SEC ΔP A -3042 TO +3042 PSID 25 S/S (P1387A) (P1388A) (P1389A)

V79 H2150A CENTER ME P ACTR A DR +13.0 TO -13.05 DEG 5 S/S (H2153A) (H2156A) (H2159A)

V79 H2151A CENTER ME Y ACTR A DR -10.51 TO +10.57 DEG 5 S/S (H2154A) (H2157A) (H2160A)

V79 H2165A LEFT ME P ACTR A DR -13.0 TO +13.05 DEG 5 S/S (H2168A) (H2171A) (H2174A)

V79 H2166A LEFT ME Y ACTR A DR -10.51 TO +10.57 DEG 5 S/S (H2169A) (H2172A) (H2175A)

V79 H2180A RIGHT ME P ACTR A DR +13.0 TO -13.05 DEG 5 S/S (H2183A) (H2186A) (H2189A)

V79 H2181A RIGHT ME Y ACTR A DR -10.51 TO +10.57 DEG 5 S/S (H2184A) (H2187A) (H2190A)

ATVC 4 (CHANNEL 4)
ATVC 3 (CHANNEL 3)
ATVC 2 (CHANNEL 2)
ATVC 1 (CHANNEL 1)

RIGHT ME YAW DRIVER
RIGHT ME PITCH DRIVER
LEFT ME YAW DRIVER
LEFT ME PITCH DRIVER
CENTER ME YAW DRIVER
▷ CENTER ME PITCH DRIVER (TYP)

DRIVER CIRCUIT (TYPICAL)

REDUNDANT CHANNEL EQUALIZATION

DEADBAND GAIN ±1175 PSI

LAG LIMITER GAIN +5.3V -5.3V

LAG NETWORK

EH VALVE DRIVER

GAIN LIMITER CKT +4.V -4.V

CURRENT DRIVER 53 MA MAX

1000 HZ ₁NZ6

LO-PASS FILTER

DEMODE

ΔP FAULT DETECTION

FAULT TRIP CKT PSI +2200 PSI

UP/DN INTEGRATOR UP COUNT ~120 MSEC DN COUNT ~240 MSEC CLR

1=UP 0=DOWN

ISOLATE

FAULT LATCH S R Q Q̄

ΔP FAULT

ISOLATION VALVE DRIVER

PWR ISOLATION CIRCUIT ₁NZ6 +5 VDC ₁NZ7 +28 VDC

PHASE SPLITTER J CK K Q Q̄

50K HZ SQ WAVE OSC.

DRIVER

FULL-WAVE CLIPPER

SD

ISOLATION VLV DRIVER

1000 HZ PRESENT
+15 VDC PRESENT
-15 VDC PRESENT
+8.5 VDC PRESENT
-8.5 VDC PRESENT
+5 VDC PRESENT

RIGHT SRB TILT DRIVER
RIGHT SRB ROCK DRIVER
LEFT SRB TILT DRIVER
LEFT SRB ROCK DRIVER

▷ ₀NZ1 +28 VDC

ISOLATION VALVE DRIVER

V79 H2110A L SRB ROCK ACTR A DR (H2114A) (H2119A) (H2125A) -6.35 TO +6.35 DEG 25 S/S

V79 H2111A L SRB TILT ACTR A DR (H2115A) (H2120A) (H2126A) +6.35 TO -6.35 DEG 25 S/S

V79 H2130A R SRB ROCK ACTR A DR (H2135A) (H2140A) (H2145A) +6.35 TO -6.35 DEG 25 S/S

V79 H2131A R SRB TILT ACTR A DR (H2136A) (H2141A) (H2146A) -6.35 TO +6.35 DEG 25 S/S

V58 H1150A CENTER ME Y ACTR POSN +8.48 TO -8.52 DEG 25 S/S

V58 H1250A LEFT ME Y ACTR POSN +8.48 TO -8.52 DEG 25 S/S

V58 H1350A RIGHT ME Y ACTR POSN +8.48 TO -8.52 DEG 25 S/S

V58 H1100A CENTER ME P ACTR POSN +10.48 TO -10.52 DEG 25 S/S

V58 H1200A LEFT ME P ACTR POSN +10.48 TO -10.52 DEG 25 S/S

V58 H1300A RIGHT ME P ACTR POSN +10.48 TO -10.52 DEG 25 S/S

ACTUATOR DRIVER

SEC ΔP FEEDBACK

ISOLATE COMMAND

RIGHT ME YAW ACTUATOR
RIGHT ME PITCH ACTUATOR
LEFT ME YAW ACTUATOR
LEFT ME PITCH ACTUATOR
CENTER ME YAW ACTUATOR
▷ CENTER ME PITCH ACTUATOR

POSITION TRANSDUCER STRAIN GAUGE TYPE ₁NZ1 9.14

CHANNEL 4
CHANNEL 3
CHANNEL 2
CHANNEL 1

ELECTRO-HYDRAULIC VALVE (TYP)

TZ8 9.14 RZ8 9.14

SECONDARY ΔP (TYP)

UZ8 9.14 LVDT 26 VAC A ₁NZ7

₁NZ5 9.14

ISOLATION VALVE (TYP)

UZ8 9.14 PZ8 9.14

V79 X4550X FCS CHANNEL FAILURE 1=FAIL 1 S/S

FF 3 C&W ELECTRONICS (AMBER) FCS CHANNEL FAIL F7

MNE MO	TITLE
V79X1170X	C ME P ACTR A FAIL
V79X1173X	C ME P ACTR B FAIL
V79X1176X	C ME P ACTR C FAIL
V79X1178X	C ME P ACTR D FAIL
V79X1171X	C ME Y ACTR A FAIL
V79X1174X	C ME Y ACTR B FAIL
V79X1177X	C ME Y ACTR C FAIL
V79X1179X	C ME Y ACTR D FAIL
V79X1270X	L ME P ACTR A FAIL
V79X1273X	L ME P ACTR B FAIL
V79X1276X	L ME P ACTR C FAIL
V79X1278X	L ME P ACTR D FAIL
V79X1271X	L ME Y ACTR A FAIL
V79X1274X	L ME Y ACTR B FAIL
V79X1277X	L ME Y ACTR C FAIL
V79X1279X	L ME Y ACTR D FAIL
V79X1370X	R ME P ACTR A FAIL
V79X1373X	R ME P ACTR B FAIL
V79X1376X	R ME P ACTR C FAIL
V79X1378X	R ME P ACTR D FAIL
V79X1371X	R ME Y ACTR A FAIL
V79X1374X	R ME Y ACTR B FAIL
V79X1377X	R ME Y ACTR C FAIL
V79X1379X	R ME Y ACTR D FAIL
V79X5101X	L SRB TILT ACT A FAIL
V79X5106X	L SRB TILT ACT B FAIL
V79X5111X	L SRB TILT ACT C FAIL
V79X5116X	L SRB TILT ACT D FAIL
V79X5100X	L SRB ROCK ACT A FAIL
V79X5105X	L SRB ROCK ACT B FAIL
V79X5110X	L SRB ROCK ACT C FAIL
V79X5115X	L SRB ROCK ACT D FAIL
V79X5151X	R SRB TILT ACT A FAIL
V79X5156X	R SRB TILT ACT B FAIL
V79X5161X	R SRB TILT ACT C FAIL
V79X5166X	R SRB TILT ACT D FAIL
V79X5150X	R SRB ROCK ACT A FAIL
V79X5155X	R SRB ROCK ACT B FAIL
V79X5160X	R SRB ROCK ACT C FAIL
V79X5165X	R SRB ROCK ACT D FAIL

B58 H1150C L SRB ROCK ACTR POSN +5.0 TO -5.2 DEG 25 S/S

B58 H1151C L SRB TILT ACTR POSN +5.0 TO -5.2 DEG 25 S/S

LL 2 LR 2

B58 H2150C R SRB ROCK ACTR POSN +5.0 TO -5.2 DEG 25 S/S

B58 H2151C R SRB TILT ACTR POSN +5.0 TO -5.2 DEG 25 S/S

ORBITER SRB

RIGHT SRB TILT ACTUATOR
RIGHT SRB ROCK ACTUATOR
LEFT SRB TILT ACTUATOR
LEFT SRB ROCK ACTUATOR

POSITION TRANSDUCER STRAIN GAUGE TYPE LZ3 9.14

CHANNEL 4
CHANNEL 3
CHANNEL 2
CHANNEL 1

ELECTRO-HYDRAULIC VALVE

EZ8 9.14 HZ8 9.14

SECONDARY ΔP 26 VAC B

HZ8 9.14 BZ6 9.14

ISOLATION VALVE

CZ8 9.14 HZ8 9.14

NOTES:

13. WHEN AN FCS CHANNEL SWITCH IS MOVED BETWEEN ANY TWO POSITIONS (I.E., AUTO TO OVERRIDE, OVERRIDE TO AUTO, OR OFF TO AUTO) THE POWER TO THE AFFECTED CHANNEL WILL BE INTERRUPTED AND THE CHANNEL WILL BE BYPASSED (FAIL MODE) FOR A MINIMUM TIME DURATION OF 210 MSEC TO A MAXIMUM TIME DURATION OF 520 MSEC DUE TO THE BREAK-BEFORE-MAKE SWITCH CHARACTERISTICS. REF. RI INTERNAL LETTER 283-220-86-009 "EFFECTS OF THE BREAK-BEFORE-MAKE DESIGN OF THE RCS CHANNEL SWITCHES"

10. RELATED FAILURE PARAMETERS ON DRAWING 9.11, AERO SURFACE SIGNAL FLOW

9. RESERVED

8. AS 25 S/S SAMPLE RATE FOR ACTUATOR A DRIVERS. ALL OTHERS AT 5 S/S

7. ONLY ACTUATOR A COMMANDS ARE DOWNLISTED

6. CENTER=MPS 1, LEFT=MPS 2, RIGHT=MPS 3

5. SRB DRIVER CIRCUIT IDENTICAL TO MPS EXCEPT ISOLATION VALVE DRIVER PWR AS SHOWN

4. REDUNDANT CHANNEL EQUILIZATION PROVIDES FEEDBACK OUT OF PHASE WITH POSITION CMD. THIS WILL NULL CHANNEL BIAS WHEN ΔP > 1175 PSI. THE LAG LIMITER INHIBITS THIS FEEDBACK WHEN ΔP FAULT DETECTION RESPONDS TO FAILURES

3. ISOLATION VALVE DRIVER OUTPUT=0 VOLTS NORMALLY, 28 VOLTS TO ISOLATE

2. DURING A POWER UP THE OUTPUT IS A 20 MSEC LOGIC ONE PULSE, NORMALLY LOGIC ZERO OR A CONTINUOUS LOGIC ONE OUTPUT WHEN BELOW THE TRIP LEVEL 4.425 VDC

NOTES: 1. MDM SIGNAL (BYPASS OR RESET) MUST BE PRESENT CONTINUOUSLY FOR AT LEAST 120 MSEC IN ORDER TO BE SENSED AS A VALID COMMAND

15 ASC TVC

SIGNATURE	DATE	NATIONAL AERONAUTICS AND SPACE ADMINISTRATION LYNDON B. JOHNSON SPACE CENTER HOUSTON, TEXAS
DSGN Judith B Heilig		
DR		
ENGR D. J. GRUBER	8/17/90	ME & SRB TVC SIGNAL FLOW
ENGR D. J. Gruber	9/7/90	
APP Stephen L. Howell	9/6/90	
APP John A. Ramsey	9/6/90	SPACE SHUTTLE
CM/IPLAN S. C. Gabbard	9-7-90	ALL
LTR E	PCN	126.5 X 34

DWG NO 9.15 PAGE SHEET OF

BASIC REV E

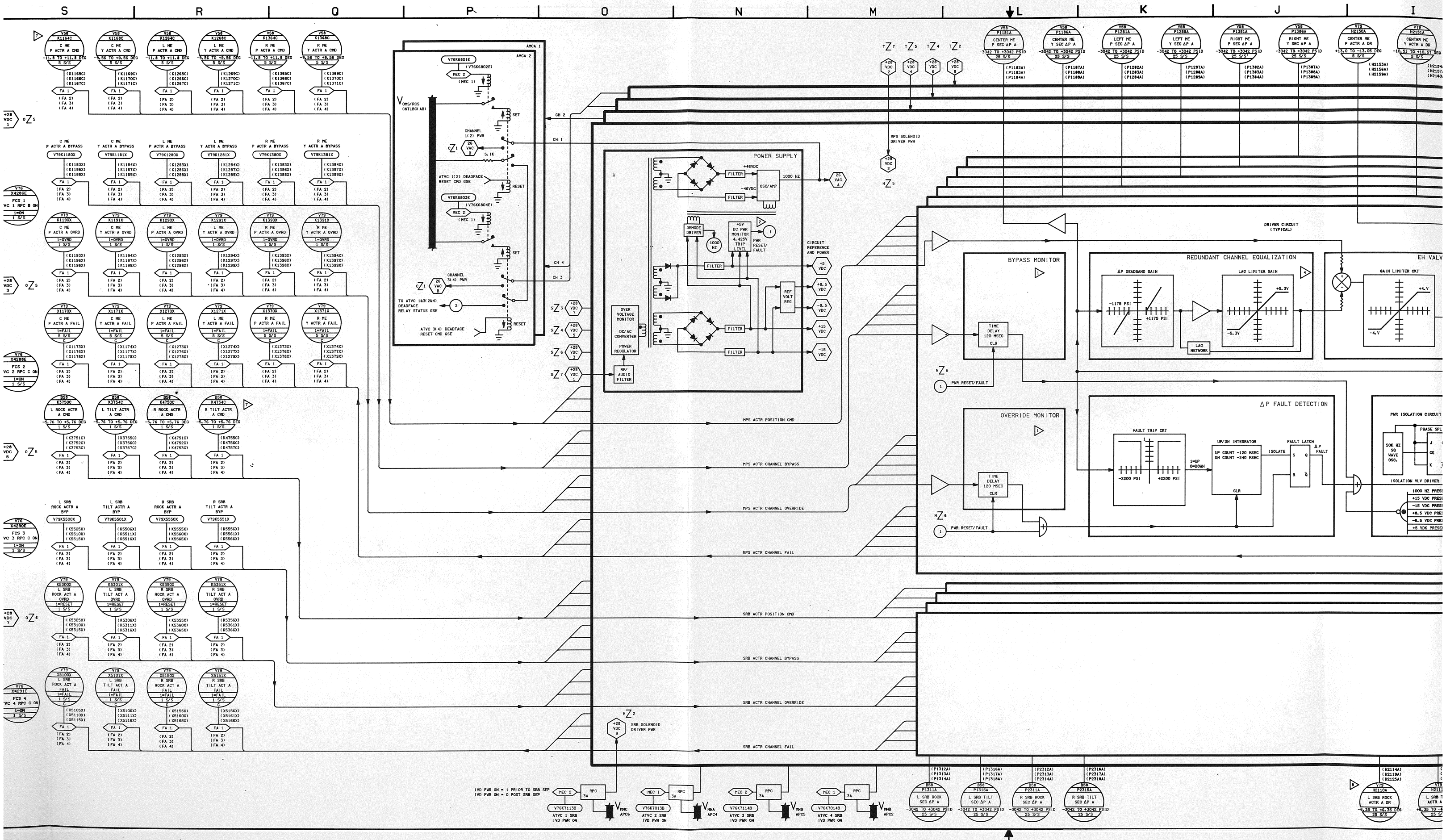

S
R
Q
P
O
N
M
L
K
J
I
POWER SUPPLY
BYPASS MONITOR
OVERRIDE MONITOR
REDUNDANT CHANNEL EQUALIZATION
ΔP FAULT DETECTION
EH VALV
DRIVER CIRCUIT (TYPICAL)
MPS ACTR POSITION CMD
MPS ACTR CHANNEL BYPASS
MPS ACTR CHANNEL OVERRIDE
MPS ACTR CHANNEL FAIL
SRB ACTR POSITION CMD
SRB ACTR CHANNEL BYPASS
SRB ACTR CHANNEL OVERRIDE
SRB ACTR CHANNEL FAIL
MPS SOLENOID DRIVER PWR
SRB SOLENOID DRIVER PWR

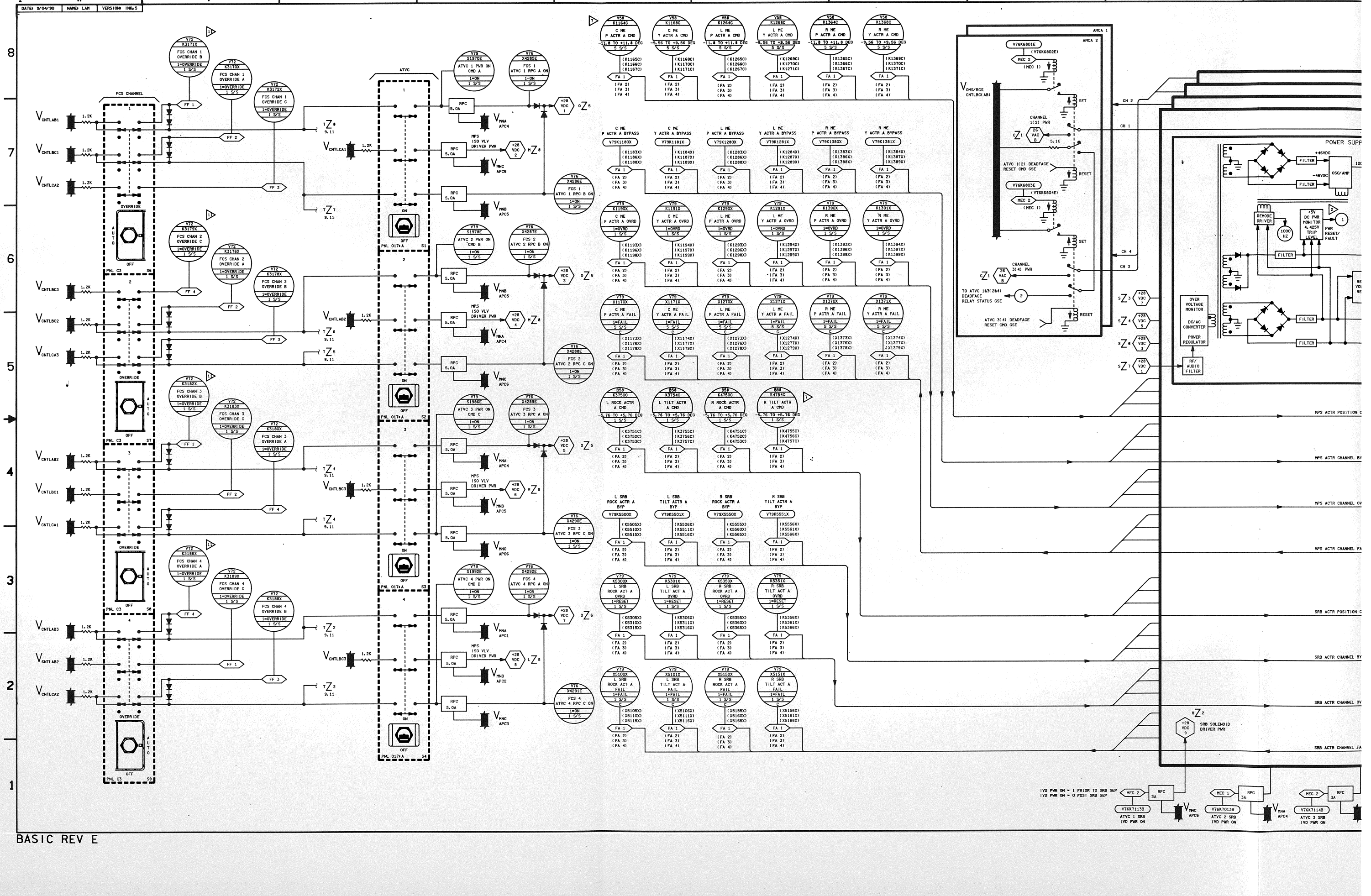

DATE: 5/04/90
NAME: LAM
VERSION: INK 5
FCS CHANNEL
ATVC
POWER SUPP
MPS ACTR POSITION C
MPS ACTR CHANNEL BY
MPS ACTR CHANNEL OV
MPS ACTR CHANNEL FA
SRB ACTR POSITION C
SRB ACTR CHANNEL BY
SRB ACTR CHANNEL OV
SRB ACTR CHANNEL FA
SRB SOLENOID DRIVER PWR
IVD PWR ON = 1 PRIOR TO SRB SEP
IVD PWR ON = 0 POST SRB SEP

BASIC REV E

DATE: 08/04/90	NAME: BJT	VERSION: INR: 3
DATE: 04/04/94	NAME: BJB	VERSION: BPT: 7
DATE: 08/04/94	NAME: VSH	VERSION: INR: 4

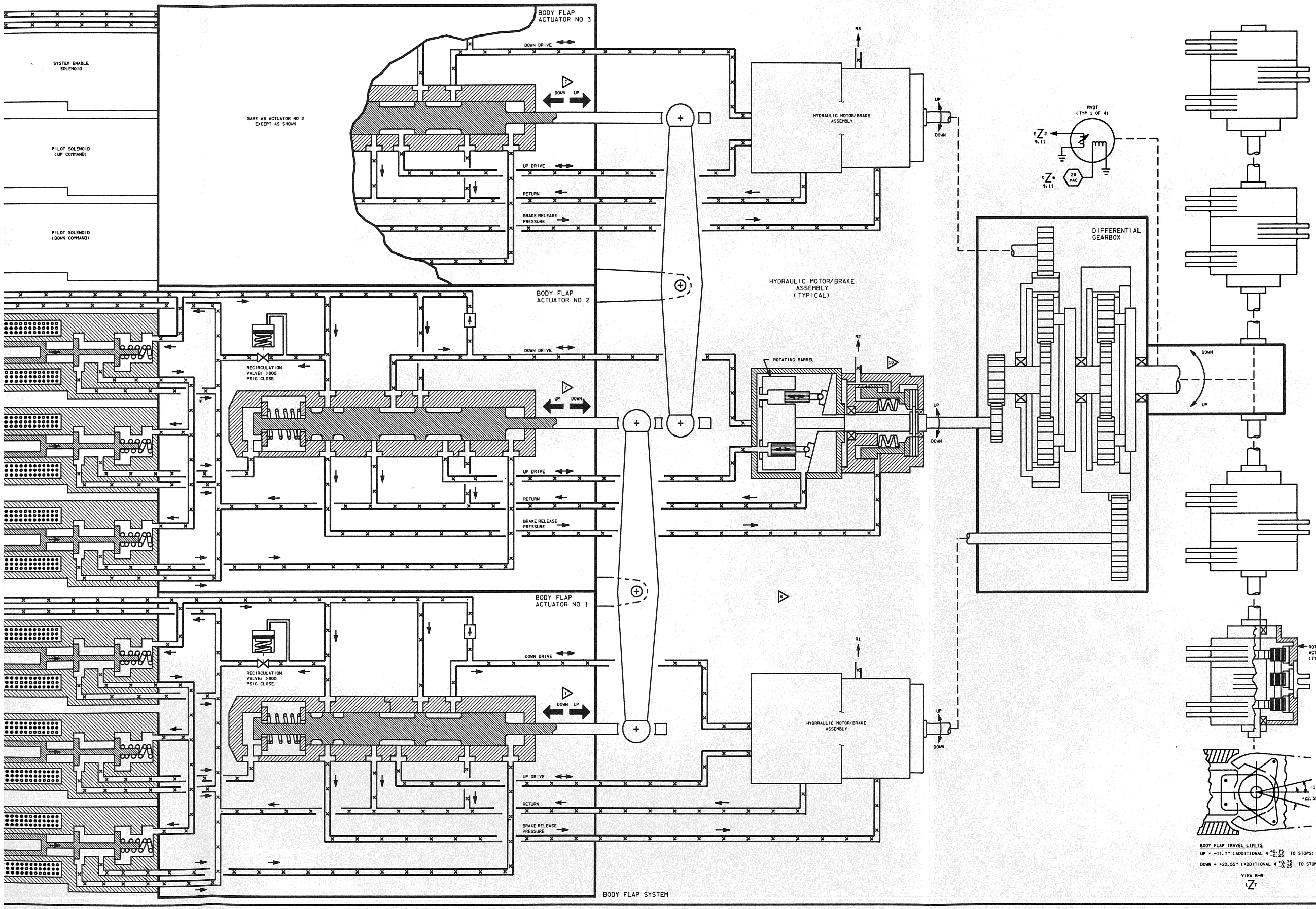

BODY FLAP TRAVEL LIMITS
UP = -11.7° (ADDITIONAL 4 $^{+0.75}_{-0.25}$ TO STOPS)
DOWN = +22.55° (ADDITIONAL 4 $^{+0.75}_{-0.25}$ TO STOPS)

VIEW B-B
1Z1

10 ORBITER HYDRAULIC SOURCE PRESSURE DISENGAGES THE HYDRAULIC BRAKE BY KEEPING THE BRAKE SHOES FROM CLAMPING DOWN ON THE DISC. LOSS OF HYDRAULIC PRESSURE ENGAGES THE BRAKE, PREVENTING THE DRIVESHAFT FROM ROTATING

9 ASSIGNMENT OF HYDRAULICS SYSTEMS VIA THE SWITCHING VALVES IS AS FOLLOWS:

	ACTIVE	FIRST STANDBY	SECOND STANDBY
LOE	3	1	2
LIE	2	1	3
RIE	3	1	2
ROE	2	1	3
RVSB	1	2	3

REFERENCE DRAWING 12.2-1,2

8 THE SECONDARY DIFFERENTIAL PRESSURE PHASING IS SUCH THAT A POSITIVE PRESSURE CAUSES A POSITIVE MOTION. ELEVON TRAILING EDGE DOWN, RUDDER TRAILING EDGE LEFT AND SPEEDBRAKE OPEN

7 EACH BODY FLAP ACTUATOR HAS A LARGER AREA ON THE SPRING END VERSES THE SHAFT END (0.3068 TO 0.2313 SQUARE INCHES). THIS RESULTS IN CHANNELS 1 AND 3 UP AND 2 DOWN HAVE LARGER FORCE CAPABILITIES

6 TWO HYDRAULIC MOTORS WILL PROVIDE THE DESIGN SPEC SURFACE RATE

5 THE BYPASS VALVE WILL BE ACTIVATED TO CAUSE BYPASS OF A HYDRAULIC ACTUATOR CHANNEL WHENEVER THE ΔP ACROSS THE SERVO VALVE EXCEEDS ±2025 PSID. THE BYPASS VALVE SPOOL PRE-LOAD RETURN SPRING IS EQUAL TO 300 PSIG

4. P1, P2 AND P3 REPRESENT HIGH PRESSURE HYDRAULIC FLUID FROM THE BASIC HYDRAULIC SUPPLIES NUMBER 1,2 AND 3 RESPECTIVELY. R1, R2 AND R3 REPRESENT RETURN PRESSURE TO THE BASIC HYDRAULIC SUPPLIES NUMBER 1, 2 AND 3 REPECTIVELY. P REPRESENTS HIGH PRESSURE HYDRAULIC FLUID FROM THE OUTPUT OF THE SWITCHING VALVES AND R REPRESENTS THE HYDRAULIC RETURN THROUGH THE SWITCHING VALVE (SEE DRAWING 12.3)

3. ALL SPRING LOADED DEVICES ARE SHOWN IN THE DE-ENERGIZED AND UNPRESSURED POSITION. HYDRAULIC RETURN LINES ARE IDENTIFIED WITH THE LETTER R. SOURCE PRESS IS 3000 PSIG

2 FILTER CONTAINS A VISUAL DIFFERENTIAL PRESSURE INDICATOR

NOTES: 1 A PLUS CURRENT TO THE ELECTRO-HYDRAULIC SERVO VALVES WILL CAUSE THE AERO-SURFACE TO DRIVE AS FOLLOWS:
ELEVONS-DOWN
RUDDER-LEFT
SPEEDBRAKE-OPEN
THE + → SHOWS THE INITIAL DIRECTION OF HYD SPOOLS, ACTUATORS AND MOTOR

16 AERO ACTRS 1

SIGNATURE		DATE	NATIONAL AERONAUTICS AND SPACE ADMINISTRATION LYNDON B. JOHNSON SPACE CENTER HOUSTON, TEXAS
DSGN	V.S. DOGGETT	7/2/80	
DR			
ENGR	L. STALLARD		AERO SURFACE ACTUATORS
ENGR		8/5/94	
APP		8/8/94	
APP		8/8/94	SPACE SHUTTLE
CKDS	S.K. Kimble	8-9-94	ALL
LTR E	PCN 4		121 X 34

DWG NO 9.16
PAGE SHEET 1 OF 2

BASIC REV E-4

T S R Q P O N M L K J

ROB ELV ACTUATOR
RIB ELV ACTUATOR
LIB ELV ACTUATOR
LOB ELV ACTUATOR
CHANNEL 1 AND 3
CHANNEL 2 AND 4

SERVO VALVE 1 (2)
SERVO VALVE 4 (3)
PIVOT
+MA
100 µ
BYPASS VALVE
POWER VALVE FEEDBACK WIRE
LVDT
26 VAC
SECONDARY Δ P
PRIMARY Δ P
POWER VALVE
ACTUATOR
POSITION FEEDBACK
(TYP 1 OF 4)

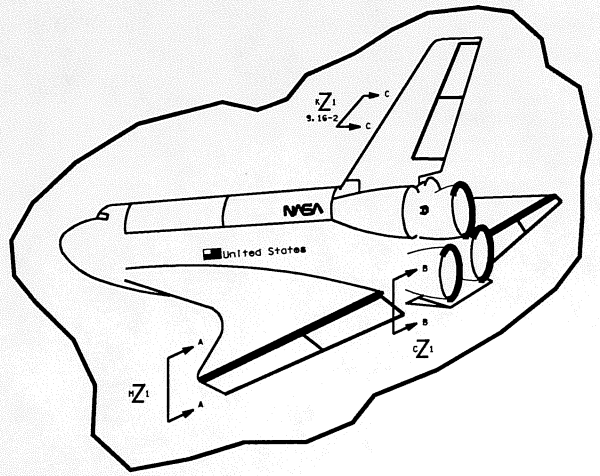

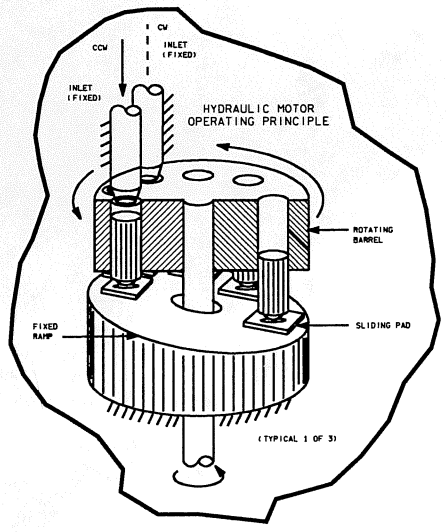

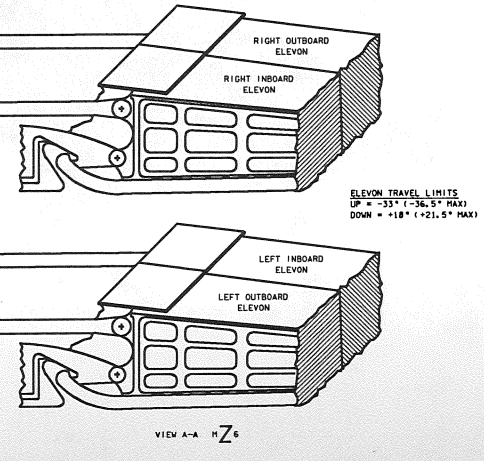

ELEVON TRAVEL LIMITS
UP = -33° (-36.5° MAX)
DOWN = +18° (+21.5° MAX)

SYSTEM ENABLE SOLENOID
PILOT SOLENOID (UP CMD)
PILOT SOLENOID (DOWN CMD)
PILOT SOLENOID (UP COMMAND)
PILOT SOLENOID (DOWN COMMAND)
PILOT SOLENOID (UP COMMAND) (TYP 1 OF 3)
P3
R3
P2
R2
P1
R1

ELEVON SYSTEM

DATE: 08/04/94 | NAME: VSH | VERSION: INK: 4

ROB ELV ACTUATOR
RIB ELV ACTUATOR
LIB ELV ACTUATOR
LOB ELV ACTUATOR
CHANNEL 1 AND 3
CHANNEL 2 AND 4

SERVO VALVE 1 (2)
SERVO VALVE 4 (3)
PIVOT
TO HYD SWITCH VALVE
15 µ
100µ
BYPASS VALVE
LVDT
26 VAC
POWER VALVE FEEDBACK WIRE
SECONDARY ΔP
POWER VALVE
POSITION FEEDBACK
ACTUATOR
PRIMARY ΔP
(TYP 1 OF 4)

ELEVON SYSTEM

BASIC REV E-4

DATE: 04/04/94	NAME: BJB	VERSION: BPT: 6
DATE: 07/11/94	NAME: VSH	VERSION: BPT: 7
DATE: 08/04/94	NAME: VSH	VERSION: INK: 7

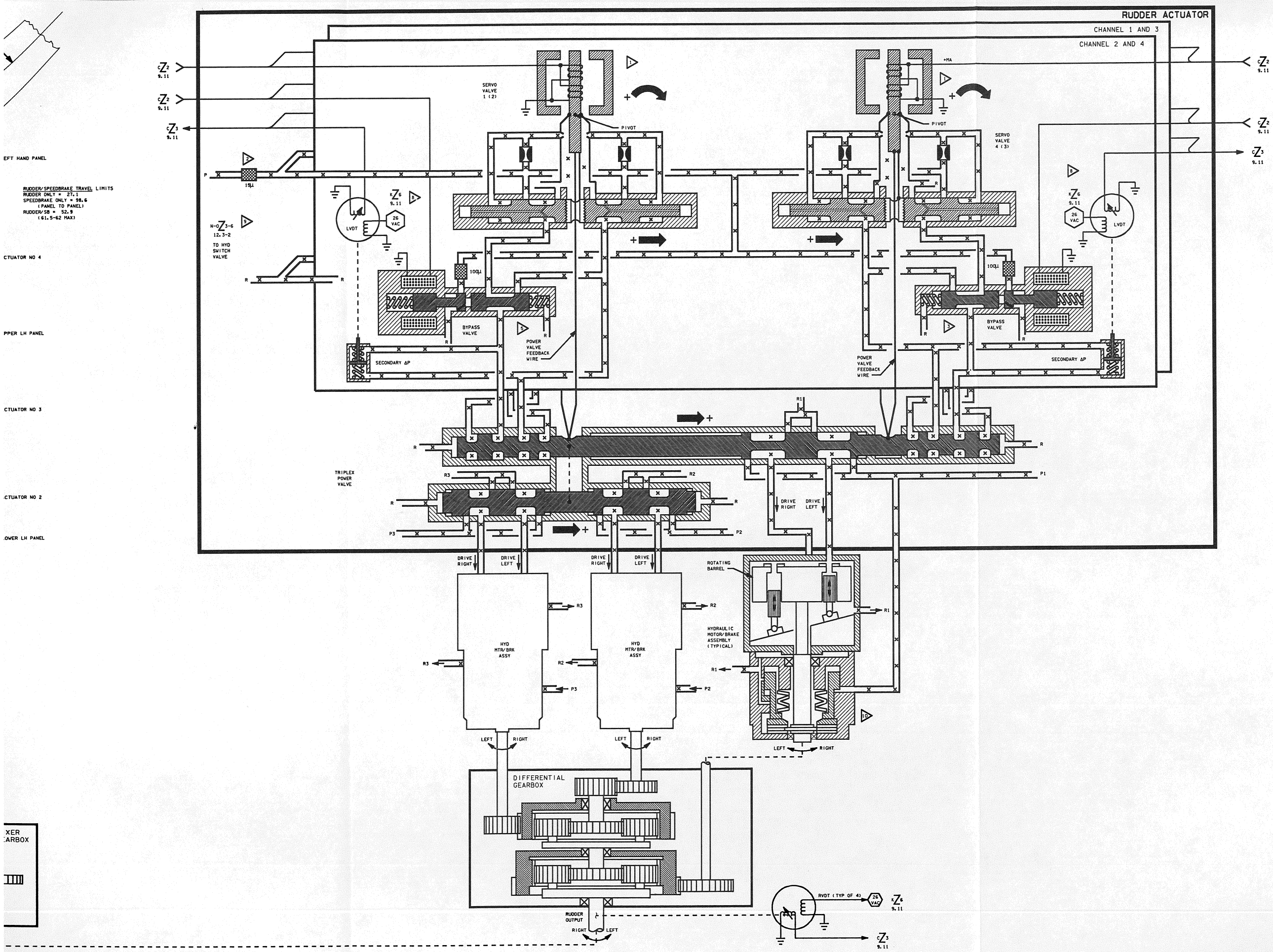

NOTE: SEE APPLICABLE NOTES ON SHEET 1

16 AERO ACTRS 2

SIGNATURE		DATE
DSGN	L. M. Buchanan	5/22/81
DR	L. M. Buchanan	5/22/81
ENGR	L. STALLARD	
ENGR	Laura Stallard	8/5/94
APP	[illegible]	8/8/94
APP	John A. Hamman	8/10/94
CADS	S. K. Kinlrece	8-9-94
LTR	E	PCN 4

NATIONAL AERONAUTICS AND SPACE ADMINISTRATION
LYNDON B. JOHNSON SPACE CENTER HOUSTON, TEXAS

AERO SURFACE ACTUATORS

SPACE SHUTTLE	DWG NO	9.16
ALL		
104.5 X 34	PAGE	SHEET 2 OF 2

BASIC REV E-4

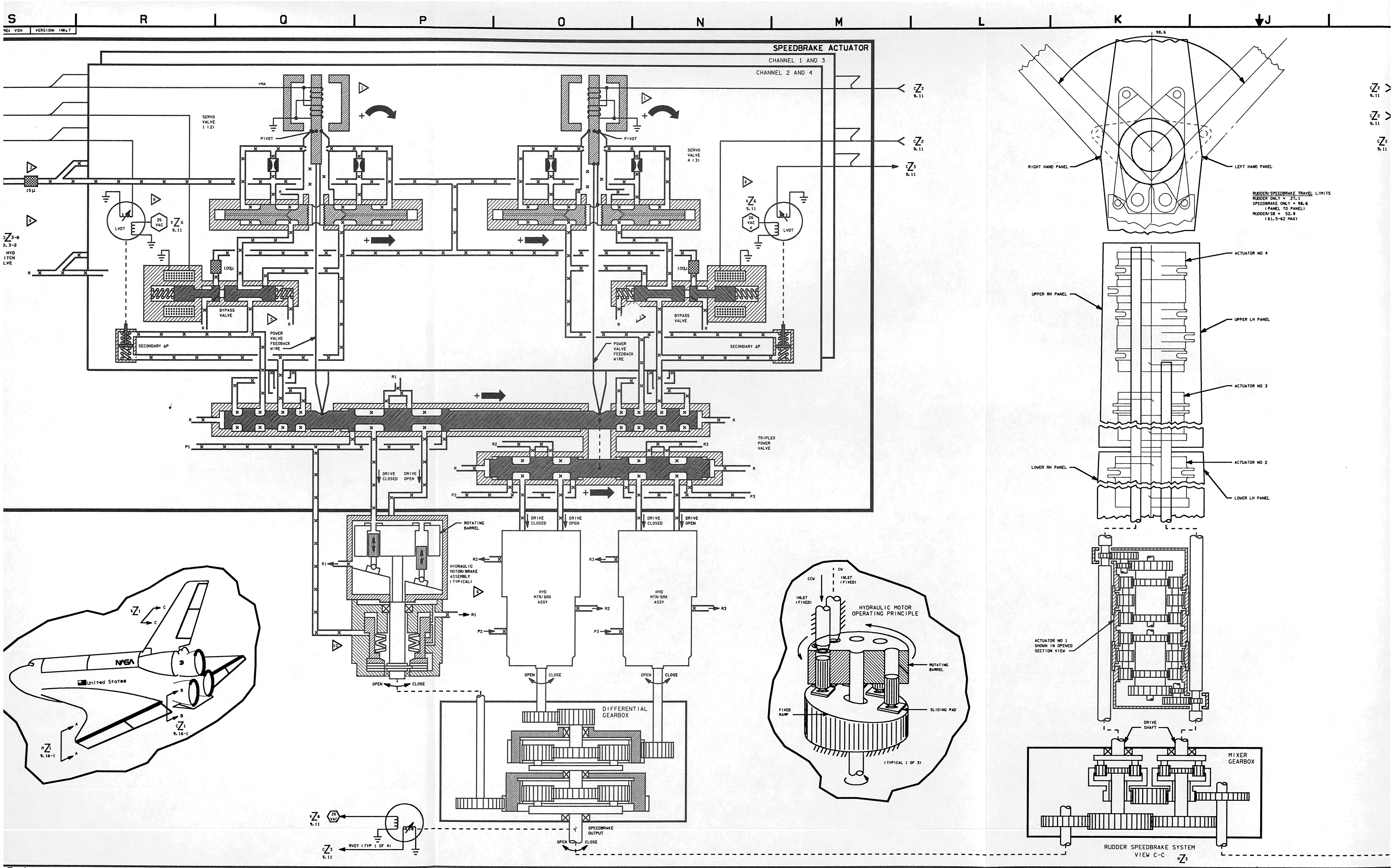

SPEEDBRAKE ACTUATOR
CHANNEL 1 AND 3
CHANNEL 2 AND 4
SERVO VALVE 1 (2)
SERVO VALVE 4 (3)
PIVOT
LVDT
26 VAC
BYPASS VALVE
SECONDARY ΔP
POWER VALVE FEEDBACK WIRE
TRIPLEX POWER VALVE
DRIVE CLOSED
DRIVE OPEN
ROTATING BARREL
HYDRAULIC MOTOR/BRAKE ASSEMBLY (TYPICAL)
HYD MTR/BRK ASSY
OPEN
CLOSE
DIFFERENTIAL GEARBOX
SPEEDBRAKE OUTPUT
RVDT (TYP 1 OF 4)
NASA
United States
HYDRAULIC MOTOR OPERATING PRINCIPLE
CCW
CW
INLET (FIXED)
FIXED RAMP
SLIDING PAD
(TYPICAL 1 OF 3)
RIGHT HAND PANEL
LEFT HAND PANEL
RUDDER/SPEEDBRAKE TRAVEL LIMITS
RUDDER ONLY = 27.1
SPEEDBRAKE ONLY = 98.6
(PANEL TO PANEL)
RUDDER/SB = 52.9
(61.5-62 MAX)
ACTUATOR NO 4
UPPER RH PANEL
UPPER LH PANEL
ACTUATOR NO 3
LOWER RH PANEL
ACTUATOR NO 2
LOWER LH PANEL
ACTUATOR NO 1 SHOWN IN OPENED SECTION VIEW
DRIVE SHAFT
MIXER GEARBOX
RUDDER SPEEDBRAKE SYSTEM
VIEW C-C

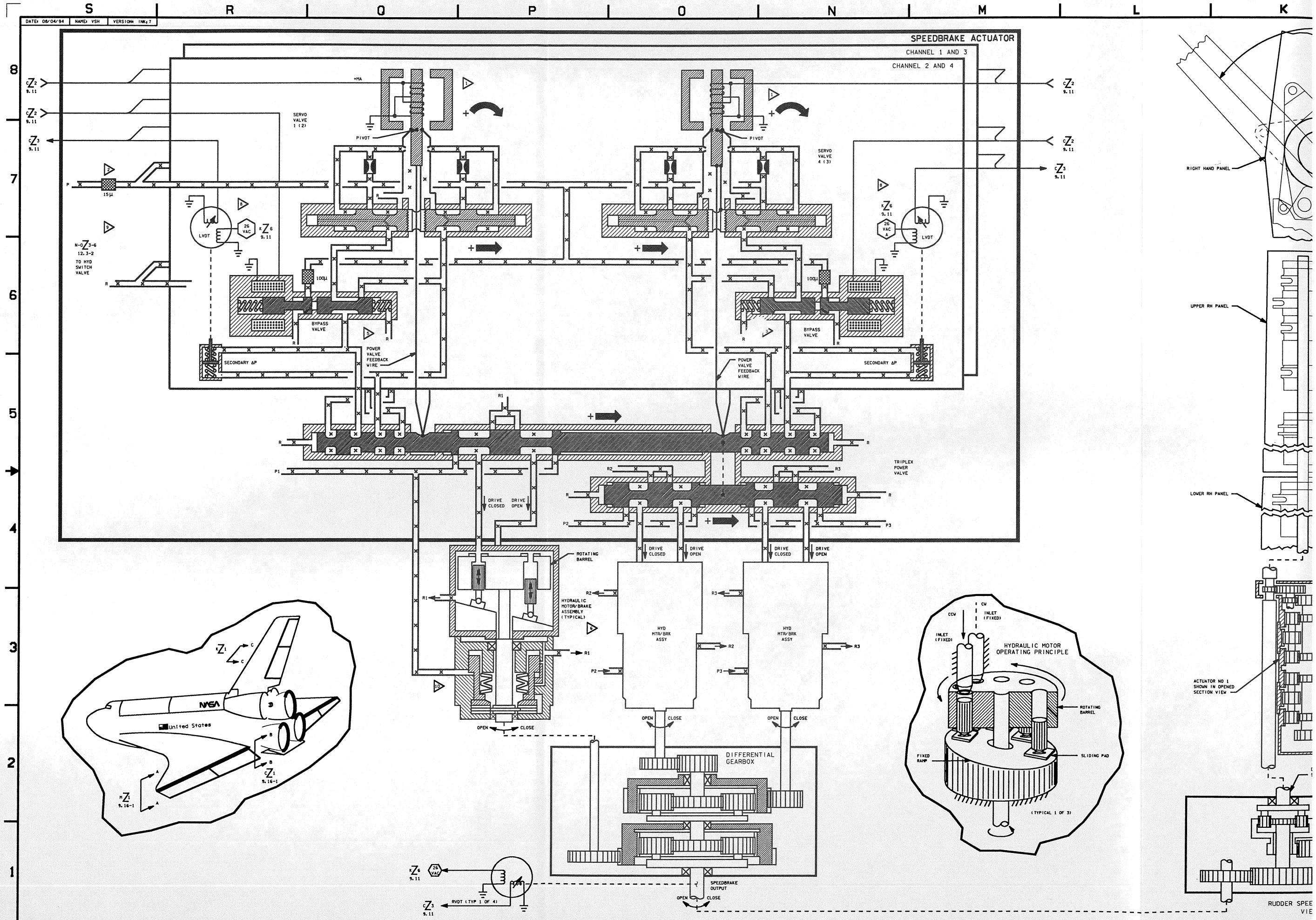

DATE: 08/04/94
NAME: VSH
VERSION: INK,7
SPEEDBRAKE ACTUATOR
CHANNEL 1 AND 3
CHANNEL 2 AND 4
SERVO VALVE 1 (2)
SERVO VALVE 4 (3)
PIVOT
LVDT
26 VAC
TO HYD SWITCH VALVE
BYPASS VALVE
SECONDARY ΔP
POWER VALVE FEEDBACK WIRE
TRIPLEX POWER VALVE
DRIVE CLOSED
DRIVE OPEN
ROTATING BARREL
HYDRAULIC MOTOR/BRAKE ASSEMBLY (TYPICAL)
HYD MTR/BRK ASSY
OPEN
CLOSE
DIFFERENTIAL GEARBOX
SPEEDBRAKE OUTPUT
RVDT (TYP 1 OF 4)
HYDRAULIC MOTOR OPERATING PRINCIPLE
CCW
CW
INLET (FIXED)
FIXED RAMP
SLIDING PAD
(TYPICAL 1 OF 3)
NASA
United States
RIGHT HAND PANEL
UPPER RH PANEL
LOWER RH PANEL
ACTUATOR NO 1 SHOWN IN OPENED SECTION VIEW
RUDDER SPEE
VIE

BASIC REV E-4

DATE: 11/20/87	NAME: JMB	VERSION: ING-6
DATE: 08/20/90	NAME: JMB	VERSION: ING-7
DATE: 08/29/90	NAME: SEV	VERSION: ING-8

RIGHT SPEED BRAKE THRUST CNTLR (SBTC)
LEFT SPEED BRAKE THRUST CNTLR (SBTC)
SBTC XDUCER C
SBTC XDUCER B
SBTC XDUCER A
LVDT
DEMOD
FILTER
±15 VDC
(TYPICAL 6 PLACES)
TAKEOVER SW C
TAKEOVER SW B
TAKEOVER SW A
5V REG SUPPLY
+15 VDC
HALL EFFECT SWITCH ELEMENT
S/C
(TYP 6 PLACES)
RUDDER PEDALS
RIGHT
LEFT
RIGHT RUDDER PEDAL TRANSDUCER ASSY (RPTA)
LEFT RUDDER PEDAL TRANSDUCER ASSY (RPTA)
RUDDER PEDAL TRANSDUCER C
RUDDER PEDAL TRANSDUCER B
RUDDER PEDAL TRANSDUCER A
(TYP 6 PLACES)
AFT TRANSLATION HAND CONTROLLER (THC)
FWD TRANSLATION HAND CONTROLLER (THC)
AFT THC
FWD THC
(TYP 36 PLACES)
F5
UP
IN
LEFT
RIGHT
OUT
DOWN

MNEMONIC	TITLE	MODULE
V94X4406X	AFT RHC CH 1, 2, 3 FAIL	GAX
V94X4407X	L RHC CH 1, 2, 3 FAIL	GAX
V94X4408X	R RHC CH 1, 2, 3 FAIL	GAX
V94X4412X	AFT RHC DLMA	GAX
V94X4411X	L RHC DLMA	GAX
V94X4413X	R RHC DLMA	GAX

1. INHIBITS RHC AND PANEL TRIMS ON THIS SIDE
2. POWER SUPPLY GOOD IS "AND" OF EACH VOLTAGE (26VAC, +15VDC, -15VDC) GOOD
3. BFS WILL ENGAGE ON ONLY 3 OF 3 VOTE FROM LEFT (RIGHT) RHC BFS MODE BUTTON
4. ORBITER MOTION REFERENCE TO BODY AXES, SENSES INDICATED ARE POSITIVE

5. SENSE SWITCH EFFECTS AFT RHC, AFT THC, AND AFT ADI. AFT ATT REF PB EFFECTS LEFT ADI AND RIGHT ADI WHEN IN REF. THE AFT THC IS PHYSICALLY ROTATED 90° CLOCKWISE

AFT RHC CMDS	ORBITAL AXIAL DYNAMICS	
	SENSE -X POSITION	SENSE -Z POSITION
ROLL LT	+X ROT	+Z ROT
ROLL RT	-X ROT	-Z ROT
PITCH UP	-Y ROT	-Y ROT
PITCH DN	+Y ROT	+Y ROT
YAW LT	+Z ROT	+X ROT
YAW RT	-Z ROT	-X ROT

AFT THC MOVEMENT	ORBITAL AXIAL DYNAMICS		COMMANDS DISPLAYED ON BOARD AND IN MCC
	SENSE -X POSITION	SENSE -Z POSITION	
IN (PUSH)	-X TRANS	-Z TRANS	+X
OUT (PULL)	+X TRANS	+Z TRANS	-X
LEFT (PORT)	+Y TRANS	+Y TRANS	+Z
RIGHT (STBD)	-Y TRANS	-Y TRANS	-Z
UP	-Z TRANS	+X TRANS	-Y
DOWN	+Z TRANS	-X TRANS	+Y

6. THREE SCRIBE MARKS ON PANELS ARE AT 25, 50, AND 75 PERCENT POSITIONS OF THE SBTC'S. FULL FORWARD ON CONTROLLER IS 0% SPEEDBRAKE AND 100% THROTTLE. FULL BACK IS 100% SPEEDBRAKE AND 65% THROTTLE
7. BFS AND TRIM ARE NOT USED ON AFT RHC

NOTES:
1. THE HALL SWITCH OUTPUT IS A CONTINUOUS LOGIC 1 OUTPUT FOR AS LONG AS BUTTON IS DEPRESSED

17 CNTLRS

SIGNATURE	DATE	NATIONAL AERONAUTICS AND SPACE ADMINISTRATION LYNDON B. JOHNSON SPACE CENTER HOUSTON, TEXAS
DSGN S.K. KIMBRELL	8-23-77	
DR S.K. KIMBRELL	3-29-79	
ENGR S.M. SPRUELL	8-17-90	RHC/SBTC/RPTA/THC
ENGR S.M. Spruell	9-4-90	
APP Ryder D. Elmore	9/10/90	
APP John Hammond	9/10/90	SPACE SHUTTLE
OPR/PLAN S.K. Kimbrell	9-11-90	ALL
LTR E PCN		126.5 X 34

DWG NO 9.17
PAGE SHEET 1 OF 1

BASIC REV E

AFT THC

FWD THC

LEFT SBTC

RIGHT SBTC

TRANSDUCER ASSEMBLY

FIXED STOP

ADJ STOP

MANUAL DRAG CLUTCH

CONTROL WEIGHT

GRIP

60°

TRANSDUCER SWITCH

LEFT SPEED BRAKE

RIGHT SPEED BRAKE

LVDT

DEMOD

FILTER

(TYP 27 PLACES)

(TYP 16 PLACES)

(TYP 6 PLACES)

HALL EFFECT SWITCH ELEMENT

SV REG SUPPLY

+15 VDC

-15 VDC

5V REG SUPPLY

S/C

ON

OFF

- PITCH TRIM SW B

- PITCH TRIM SW A

+ PITCH TRIM SW B

+ PITCH TRIM SW A

- ROLL TRIM SW B

- ROLL TRIM SW A

+ROLL TRIM SW B

+ROLL TRIM SW A

RHC-BFS MODE BUTTON C

RHC-BFS MODE BUTTON B

RHC-BFS MODE BUTTON A

YAW CMD C

YAW CMD B

YAW CMD A

PITCH CMD C

PITCH CMD B

PITCH CMD A

ROLL CMD C

ROLL CMD B

ROLL CMD A

AFT ROTATION HAND CONTROLLER (RHC)

RIGHT ROTATION HAND CONTROLLER (RHC)

LEFT ROTATION HAND CONTROLLER (RHC)

TRIM SWITCHES

RHC-BFS MODE BUTTON

COMM SWITCH

AFT RHC

RIGHT RHC

LEFT RHC

ROTATION HAND CONTROLLER (RHC)

TRIM SWITCH COMM

PITCH ROLL 22.4° TRAVEL

YAW 22.4° TRAVEL

RHC-BFS MODE BUTTON

ROLL TRIM

PITCH TRIM

YAW TRIM

TRIM

RHC/PANEL

PANEL

ENABLE

INHIBIT1

INHIBIT2

CONTROL

SENSE

CNTLA1

CNTLA2

CNTLB1

CNTLB2

CNTLC1

CNTLC2

1.2K

SENSE SW -X CON A

SENSE SW -X CON B

SENSE SW -Z CON A

SENSE SW -Z CON B

L BOOT FLAP UP A

L BOOT FLAP UP B

L BOOT FLAP DOWN A

L BOOT FLAP DOWN B

R BOOT FLAP UP A

R BOOT FLAP UP B

R BOOT FLAP DOWN A

R BOOT FLAP DOWN B

BOOT FLAP

AUTO/ OFF

UP

DOWN

-X

-Z

+X

+Z

-P

+P

-R

+R

-Y

+Y

-100 PCT TO +100 PCT

5 S/S

1 S/S

1=-X

1=-Z

1=+X

1=+Z

1=+P

1=-P

1=-R

1=+R

1=-Y

1=+Y

1=-100

1=+100

1=DOWN

1=UP

1=TRIM

1=INHIBIT1

1=INHIBIT2

1=ON

1=OFF

1=ENABLE

1=INHIBIT

1=PWR SPLY C

1=PWR SPLY B

1=PWR SPLY A

1=PWR SPLY

1=DOOR 1

1=DOOR 2

1=DOOR 3

1=DOOR 4

1=DOOR

1=PANEL

1=RHC/PANEL

1=TRIM

1=ROLL TRIM

1=PITCH TRIM

1=YAW TRIM

1=RHC TRIM PWR ON A

1=RHC TRIM PWR ON B

1=RHC TRIM INHIBIT1 A

1=RHC TRIM INHIBIT1 B

1=RHC TRIM INHIBIT2 A

1=RHC TRIM INHIBIT2 B

1=L PWR TRIM PWR ON A

1=L PWR TRIM PWR ON B

1=L PWR TRIM INHIBIT1 A

1=L PWR TRIM INHIBIT1 B

1=L PWR TRIM INHIBIT2 A

1=L PWR TRIM INHIBIT2 B

1=R PWR TRIM PWR ON A

1=R PWR TRIM PWR ON B

1=R PWR TRIM INHIBIT1 A

1=R PWR TRIM INHIBIT1 B

1=R PWR TRIM INHIBIT2 A

1=R PWR TRIM INHIBIT2 B

1=L PWR PANEL PWR ON A

1=L PWR PANEL PWR ON B

1=L PWR PANEL INHIBIT1 A

1=L PWR PANEL INHIBIT1 B

1=L PWR PANEL INHIBIT2 A

1=L PWR PANEL INHIBIT2 B

1=R PWR PANEL PWR ON A

1=R PWR PANEL PWR ON B

1=R PWR PANEL INHIBIT1 A

1=R PWR PANEL INHIBIT1 B

1=R PWR PANEL INHIBIT2 A

1=R PWR PANEL

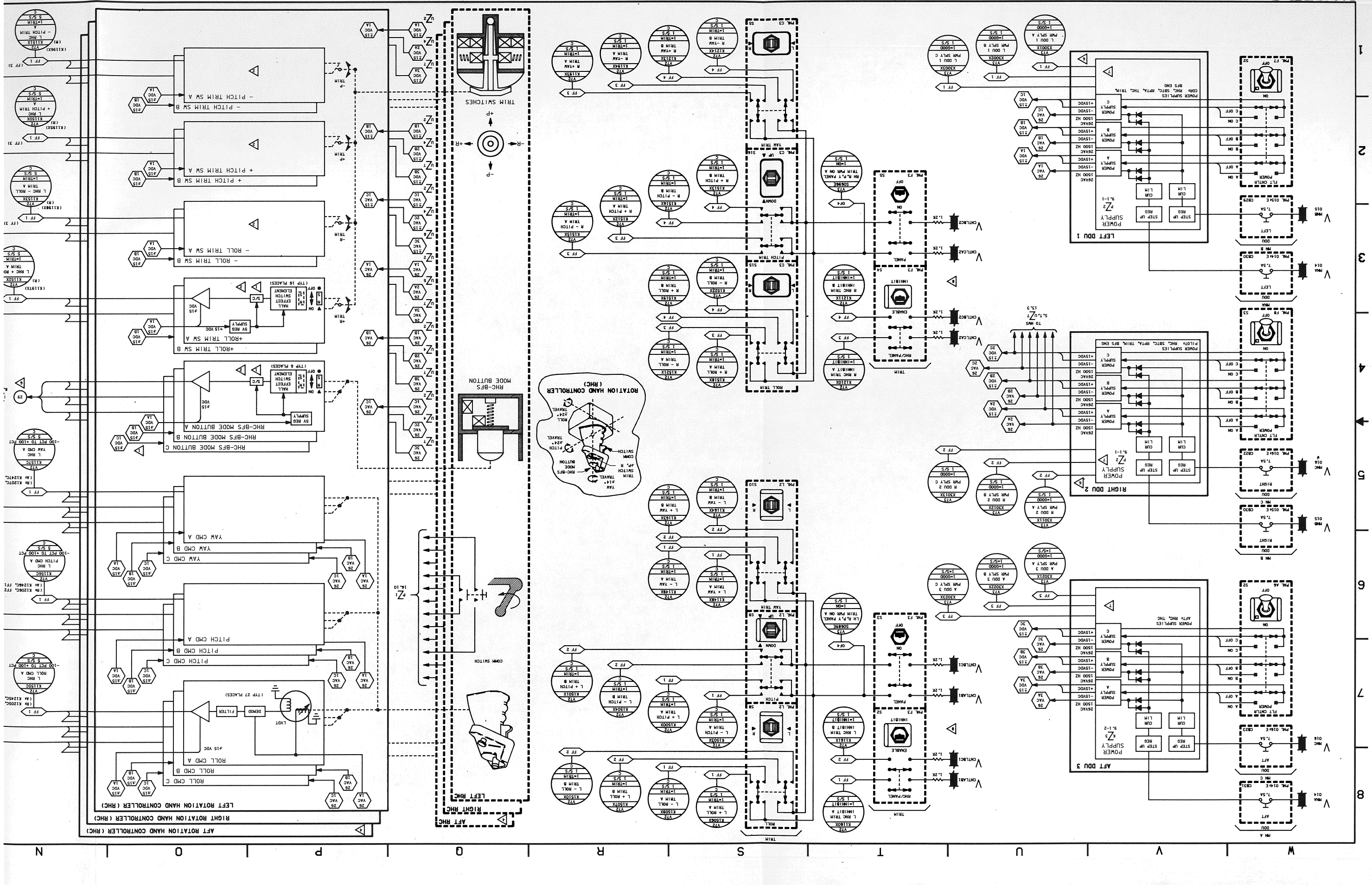
BASIC REV E
LEFT DDU 1
RIGHT DDU 2
AFT DDU 3
POWER SUPPLY
TRIM SWITCHES
RHC-BFS MODE BUTTON
ROTATION HAND CONTROLLER (RHC)
LEFT RHC
RIGHT RHC
AFT RHC
LEFT ROTATION HAND CONTROLLER (RHC)
RIGHT ROTATION HAND CONTROLLER (RHC)
AFT ROTATION HAND CONTROLLER (RHC)
- PITCH TRIM SW A
+ PITCH TRIM SW A
- ROLL TRIM SW A
+ROLL TRIM SW A
RHC-BFS MODE BUTTON A
RHC-BFS MODE BUTTON B
RHC-BFS MODE BUTTON C
YAW CMD A
YAW CMD B
YAW CMD C
PITCH CMD A
PITCH CMD B
PITCH CMD C
ROLL CMD A
ROLL CMD B
ROLL CMD C
FILTER
DEMOD
LVDT
COMM SWITCH
TRIM
ROLL
PITCH
YAW TRIM
PANEL
INHIBIT
ENABLE
RHC/PANEL
FLT CNTLR
POWER
STEP UP
REG
CUR
LIM
ON
OFF
1
2
3
4
5
6
7
8
9
N
O
P
Q
R
S
T
U
V
W

DATE: 07/02/96	NAME: JMB	VERSION: BPT: 3
DATE: 07/15/96	NAME: BJR	VERSION: BPT: 4
DATE: 07/29/96	NAME: SVJ	VERSION: INK: 1

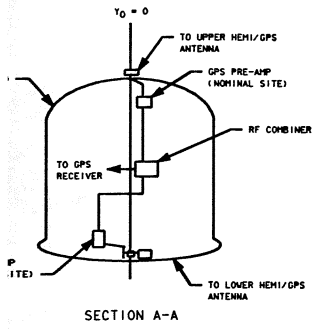

SECTION A-A

PRE-AMP AND RF COMBINER LOCATIONS

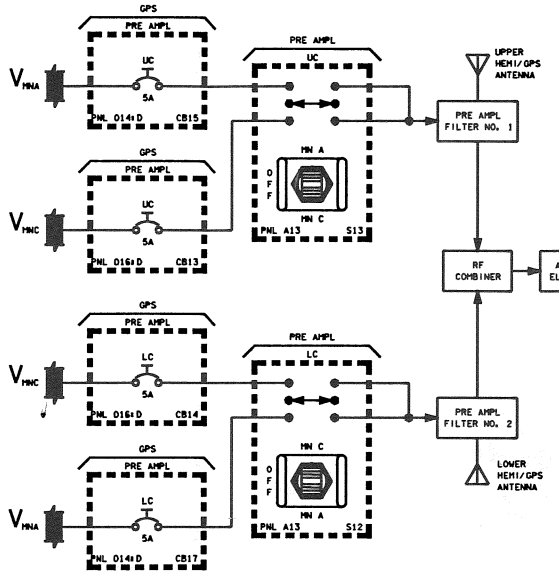

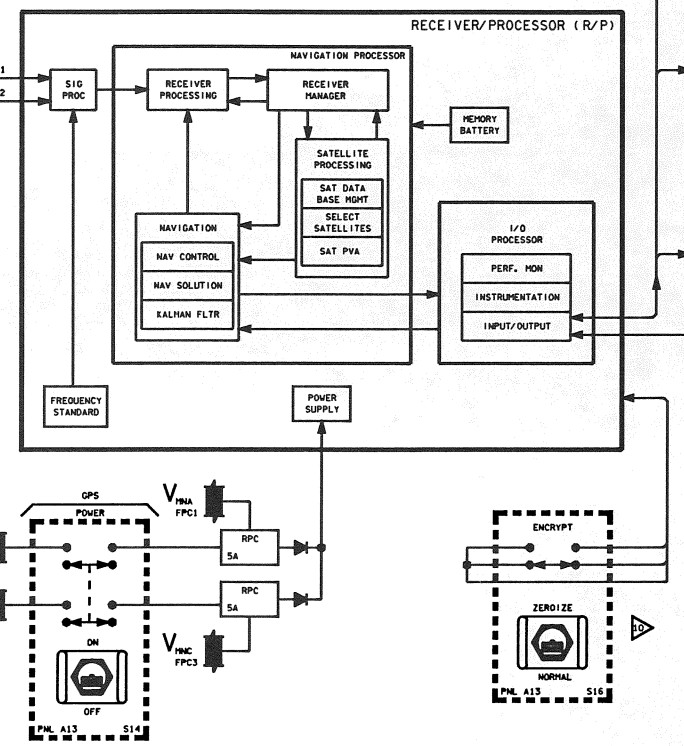

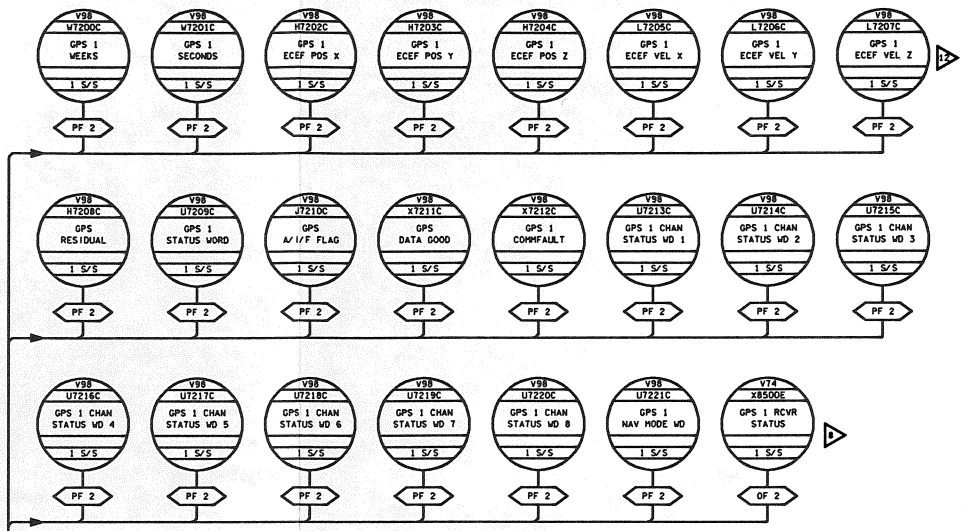

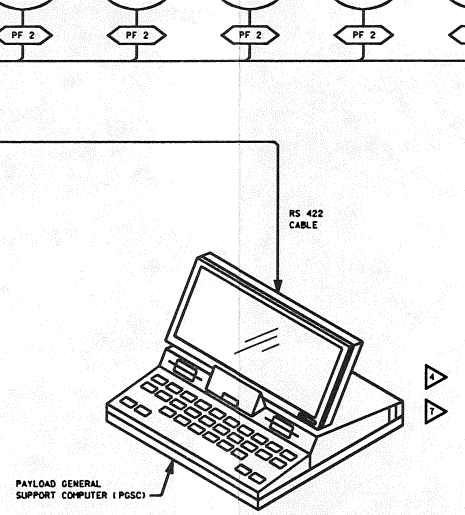

AV BAY 3B

MINIATURE AIRBORNE GPS RECEIVER-SHUTTLE (MAGR-S)
VENDOR: ROCKWELL-COLLINS
WEIGHT: 13 LBS
POWER: 33 WATTS
COOLING: CONVECTION

▷ TELEMETRY DATA (ALL V98 MSIDS) ARE ONLY AVAILABLE IN BFS (OPS 1/6, 3)

11. THE GPS MAGR-S RECEIVER SHALL BE CAPABLE OF UTILIZING THE PRECISE POSITIONING SYSTEM (PPS)

10. THE ENCRYPTION SWITCH (PANEL A13) WILL BE MOVED FROM THE NORMAL POSITION TO THE ZEROIZE POSITION (POST LANDING) FOR NON-APPROVED LANDING SITES (SECURITY PROTECTION)

9. SPEC 55 "GPS STATUS" (NEW; AVAILABLE IN ALL BFS OPS) AND BFS SPEC 50 "HORIZONTAL SITUATION DISPLAY" (UPGRADED; ASCENT/ENTRY) WILL PROVIDE GPS HEALTH, GPS-DERIVED EQUIVALENT TACAN AZIMUTH AND RANGE PARAMETERS, AND GPS TRACKING OF THE ONBOARD NAV STATE

▷ DURING ANY OPS, A SINGLE GPS DISCRETE (V74X8500E) IS AVAILABLE VIA PASS MDM OF2
("0" = NOMINAL RECEIVER TRACKING OF 4 SATELLITES, OR THE UNIT IS POWERED OFF)
("1" = THE RECEIVER IS POWERED, BUT IS TRACKING LESS THAN 4 SATELLITES)

▷ OPS 2 GPS DATA IS RECORDED ON ITS DEDICATED POSC AND CAN BE DUMPED PERIODICALLY VIA MODE. GPS DATA RECORDED ON POSC FOR POST FLIGHT ANALYSIS

6. THE CAPABILITY TO UPDATE THE ONBOARD STATE VECTOR WITH GPS DATA WILL BE CONTROLLED VIA A GPS LOCKOUT BIT (I-LOAD V97U2126C)
V97U2126C = 0 NEVER LEGAL
V97U2126C = 1 NEVER LEGAL
V97U2126C = 2 LEGAL IN MMs 106 AND 301 ONLY
V97U2126C = 3 ALWAYS LEGAL

5. DURING OPS 1 AND OPS 3, THE GPS IS CONNECTED TO THE BFS GPC VIA PAYLOAD MDM PF2 (FOR AIDING AND TELEMETRY)

▷ DURING OPS 2, THE GPS STATE VECTOR CAN BE RE-INITIALIZED BY TRANSFERRING THE VEHICLE STATE VECTOR VIA THE POSC

3. NO SMS MODELING OF GPS AVAILABLE IN OI-25, OI-26A

2. THIS SINGLE GPS RECEIVER CONFIGURATION APPLIES TO OV-103, OV-104, AND OV-105 ONLY

NOTES: 1. THE PURPOSE OF THE OI-25, OI-26A GPS FLIGHTS IS TO GAIN EARLY INSIGHT INTO GPS PERFORMANCE IN THE SPACE SHUTTLE ENVIRONMENT. THIS CONFIGURATION IS BASICALLY AN ENHANCED VERSION OF THE GPS DFT (FLOWN ON OV-105 FLIGHTS)

18 GPS

SIGNATURE		DATE	NATIONAL AERONAUTICS AND SPACE ADMINISTRATION LYNDON B. JOHNSON SPACE CENTER HOUSTON, TEXAS	
DSGN	J. BLANCHARD	05/16/96	GLOBAL POSITIONING SYSTEM (GPS) OI-25 AND OI-26A	
DR				
ENGR	E. LIEBMAN			
ENGR	E. Liebman	7/29/96		
APP		7/29/96		
APP		7/31/96	SPACE SHUTTLE	DWG NO 9.18
CADS		8/1/96	ALL	
LTR E	PCN 6		66 X 34	PAGE SHEET 1 OF 1

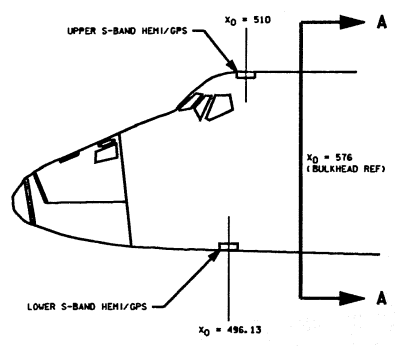

EXISTING ANTENNAS

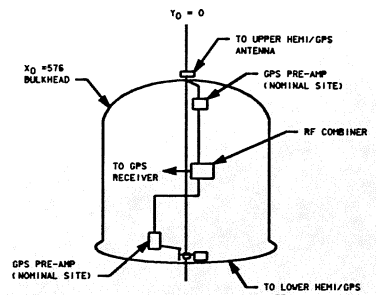

SECTION A-A

PRE-AMP AND
RF COMBINER LOCATIONS

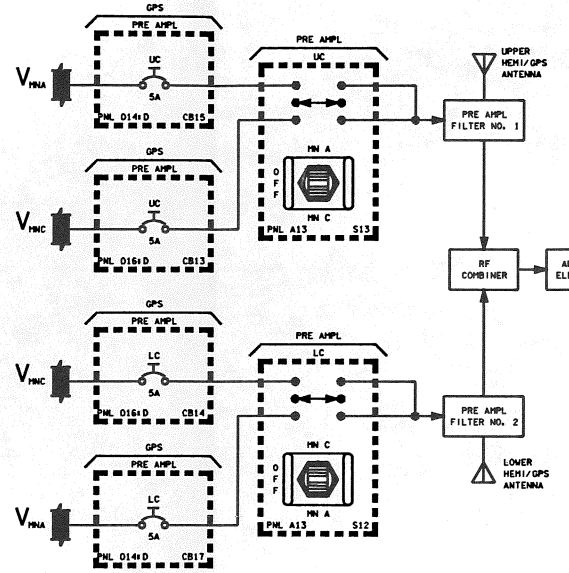

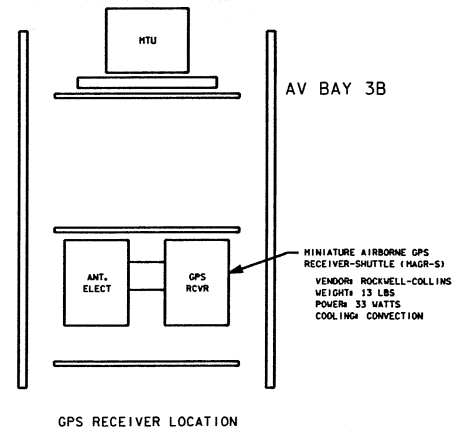

GPS RECEIVER LOCATION

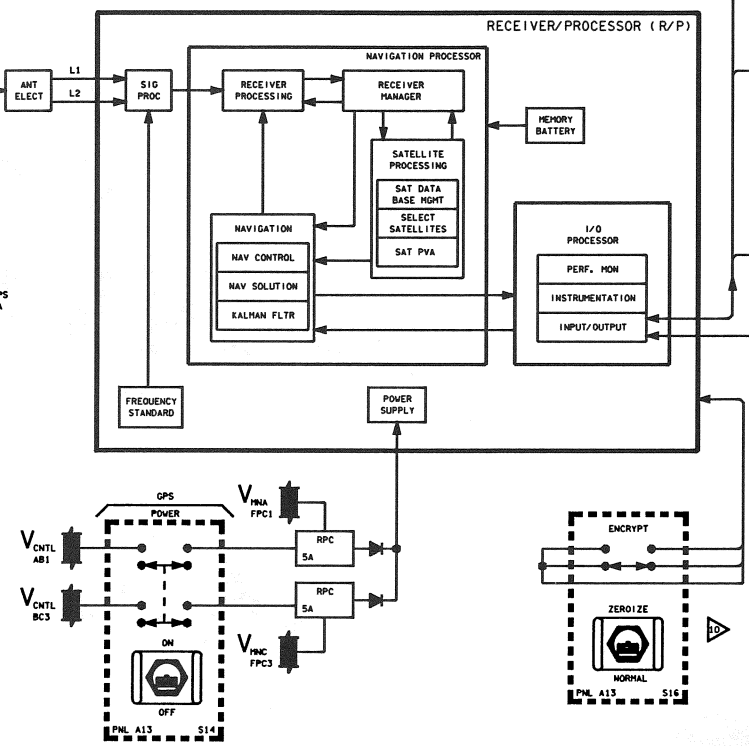

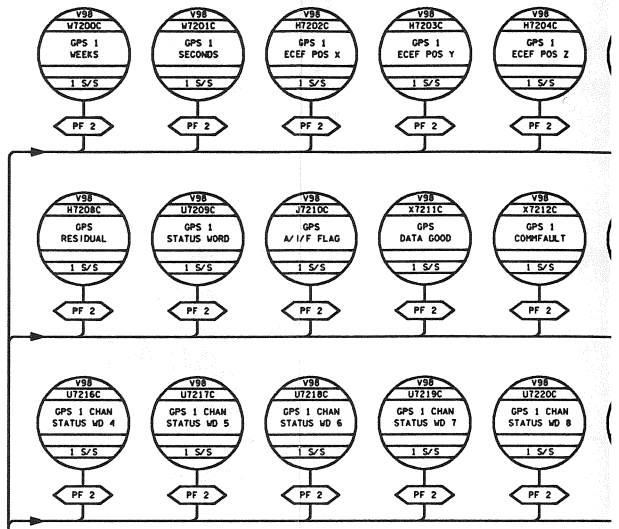

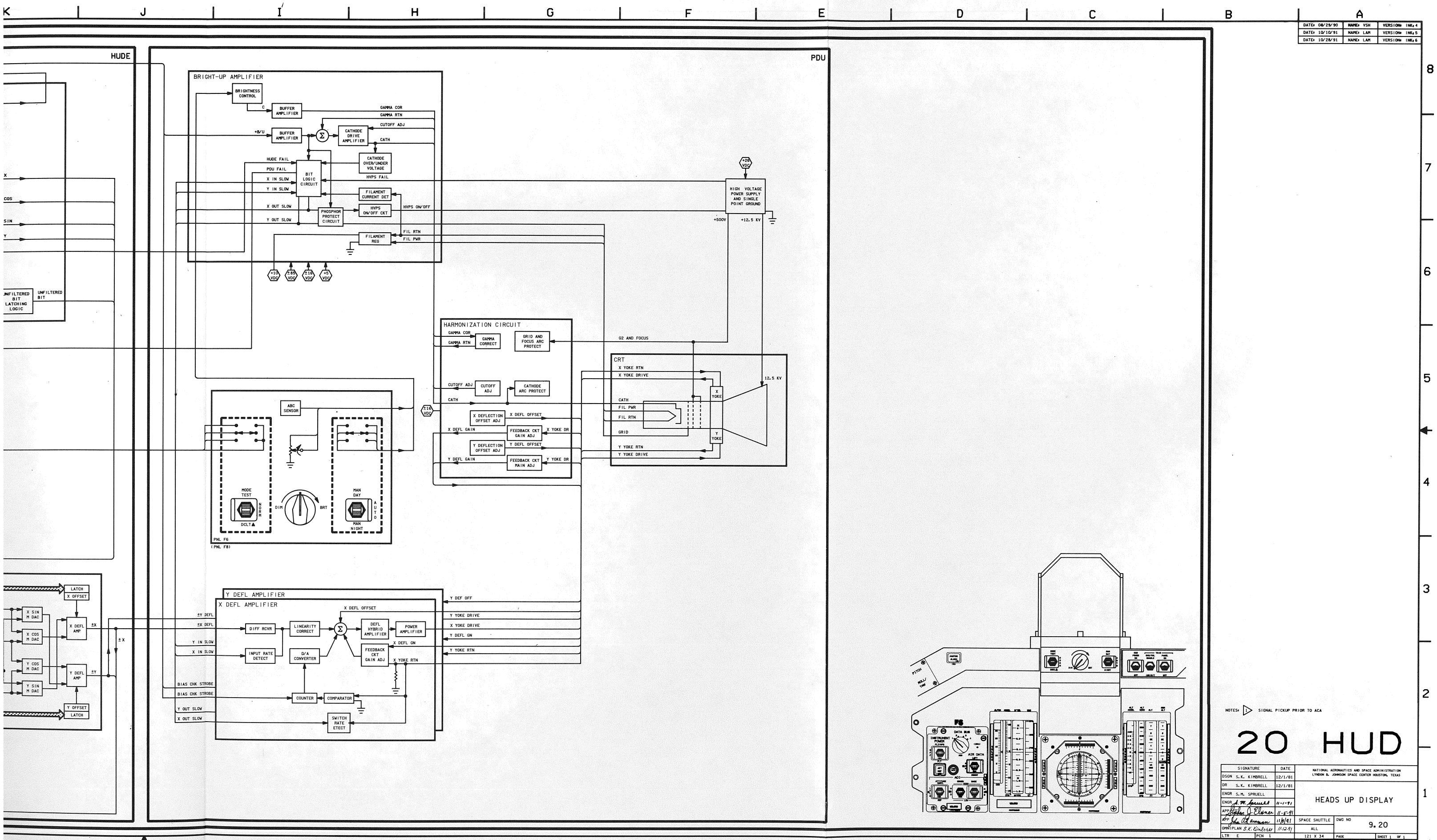

DATE: 08/29/90	NAME: VSH	VERSION: INK: 4
DATE: 10/10/91	NAME: LAM	VERSION: INK: 5
DATE: 10/28/91	NAME: LAM	VERSION: INK: 6

NOTES: 1 SIGNAL PICKUP PRIOR TO ACA

20 HUD

SIGNATURE	DATE	NATIONAL AERONAUTICS AND SPACE ADMINISTRATION LYNDON B. JOHNSON SPACE CENTER HOUSTON, TEXAS
DSGN S.K. KIMBRELL	12/1/81	
DR S.K. KIMBRELL	12/1/81	HEADS UP DISPLAY
ENGR S.M. SPRUELL		
ENGR S.M. Spruell	11-1-91	
APP Stephen J. Elsner	11-5-91	
APP John A. Lamman	11/8/91	SPACE SHUTTLE — DWG NO 9.20
OMNIPLAN S.K. Kimbrell	11-12-91	ALL
LTR E — PCN 1		121 X 34 — PAGE — SHEET 1 OF 1

BASIC REV E-1

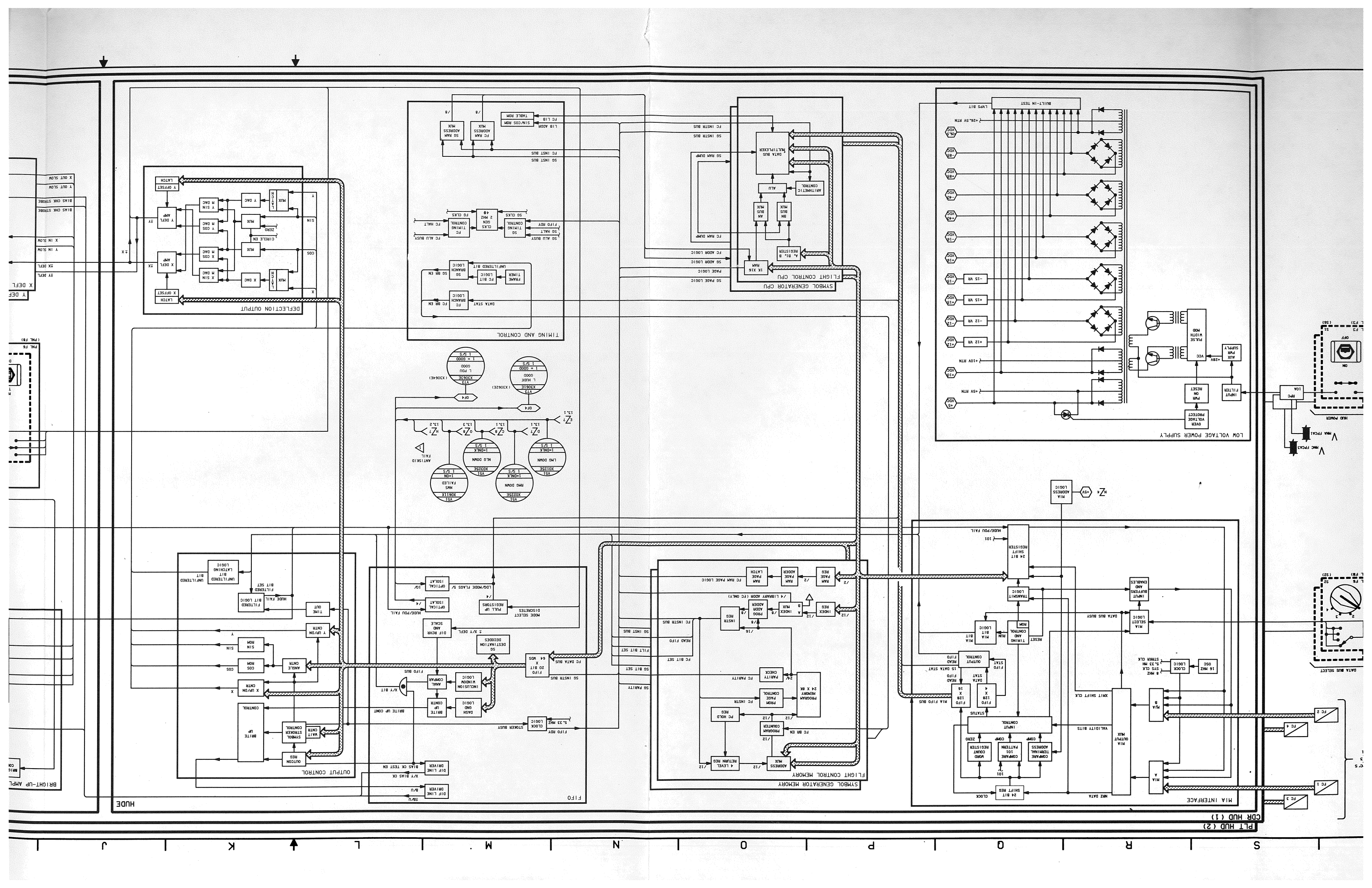
LOW VOLTAGE POWER SUPPLY
SYMBOL GENERATOR CPU
FLIGHT CONTROL CPU
TIMING AND CONTROL
DEFLECTION OUTPUT
FIFO
OUTPUT CONTROL
SYMBOL GENERATOR MEMORY
FLIGHT CONTROL MEMORY
MIA INTERFACE
HUDE
PLT HUD (2)
COR HUD (1)
BUILT-IN TEST
LVPS BIT
INPUT FILTER
PWR ON RESET
OVER VOLTAGE PROTECT
AUX PWR SUPPLY
PULSE WIDTH MOD
VCC
+28V
+5V RTN
+10V RTN
+12 VR
-12 VR
+15 VR
-15 VR
+28.5V RTN
LOA
RPC
HUD POWER
OFF
ON
S1
S2
S3
(S6)
(S2)
DATA BUS SELECT
MAN FPCA1
MAN FPCA3
FC 1
FC 2
FC 3
FC 4
MIA ADDRESS LOGIC
+5V
24 BIT SHIFT REGISTER
HUDE/PDU FAIL
MIA INTERFACE
MIA A
MIA B
MIA OUTPUT MUX
MIA SELECT LOGIC
INPUT BUFFERS AND CABLES
TRANSMIT LOGIC
TIMING AND CONTROL RAM
RAM CONTROL
MIA BIT LOGIC
OUTPUT CONTROL
INPUT CONTROL
VALIDITY BITS
STATUS
FIFO 128 X 4
FIFO 128 X 16
MIA FIFO BUS
DATA BUS BUSY
CLOCK
16 MHZ OSC
8 MHZ SYS CLK
5.33 MH STARR CLK
XMIT SHIFT CLK
M2 DATA
24 BIT SHIFT REG
CLOCK
COMPARE TERMINAL ADDRESS
COMPARE PATTERN REGISTER
COMPARE WORD COUNT REGISTER
COMP
COMP
ZERO
101
FC BR EN
PROGRAM COUNTER
PROGRAM MEMORY 24 X 8K
PROM CONTROL
FC INSTR
FC PARITY
PARITY CHECK
24
FIFO DATA STAT
READ FIFO
FC HOLD REG
4 LEVEL RETURN REG
ADDRESS MUX
/12
INSTR REG
/16
/8
INDEX MUX
INDEX REG
RAM PAGE ADDER
RAM PAGE LATCH
RAM PAGE REG
/2
FC RAM PAGE LOGIC
/4 LIBRARY ADDR (FC ONLY)
PROG ADDR ADDER
A
B
FC INSTR BUS
SG INSTR BUS
SG RAM DUMP
FC RAM DUMP
FC ADDR LOGIC
SG ADDR LOGIC
SG PAGE LOGIC
FC PAGE LOGIC
1K X16 RAM
A, B1, B REGISTER
AN BUS MUX
BN BUS MUX
ALU
ARITHMETIC CONTROL
DATA BUS MULTIPLEXER
FC INSTR BUS
SG INSTR BUS
SG INST BUS
FC INST BUS
LIB ADDR
FC LIB
SIN/COS ROM
TABLE ROM
/8
FC RAM ADDRESS MUX
SG RAM ADDRESS MUX
TIMING CONTROL
SG
FIFO RDY
SG HALT
SG ALU BUSY
FC ALU BUSY
FC HALT
FC CLKS
SG CLKS
49
CLKS 2 MHZ GEN
DATA STAT
FC BRANCH LOGIC
SG BRANCH LOGIC
FC BR EN
SG BR EN
FRAME TIMER
FC BIT LOGIC
UNFILTERED BIT
FC BIT SET
SG BIT SET
SG PARITY
FLT BIT SET
FIFO 20 BIT X 64 WDS
FC DATA BUS
SG DATA BUS
DESTINATION DECODES
SG
DIF RVSR AND SCALE
± X/Y DEFL
MODE SELECTS
DISCRETES
PULL UP RESISTORS
OPTICAL ISOLAT
OPTICAL ISOLAT
LOG/MODE FLAGS 5V
10/
/4
MODE FAIL
FILTERED BIT LOGIC
UNFILTERED BIT LATCHING LOGIC
UNFILTERED BIT
FILTERED BIT SET
TIME OUT
Y UP/DN CNTR
SIN ROM
COS ROM
ANGLE CNTR
X UP/DN CNTR
SYMBOL STROKER CONTROL
WAIT CNTR
BRITE UP
BRITE UP CONTROL
BRITE UP CONT
OUTTON REG
DIF LINE DRIVER
DIF LINE DRIVER
BIAS CK TEST EN
X/Y BIAS CK
+5V
-5V
15V
BIU
X/Y BIT
INCLUSION WINDOW
ANAL COMPAR
DASH GND LOGIC
BRITE UP COUNTR
FIFO BUS
STROKER BUSY
FIFO RDY
5.33 MHZ
CLOCK LOGIC
ANTISKID FAIL
ANTISKID
NWS FAILED
I=ON
I=ONLK
NWS DOWN
NLG DOWN
RMS DOWN
LMS DOWN
V51 X06117
V51 X02256
V51 X01256
V51 X02256
V51 X01256
V73 X30613E L HUDE 0000
V74 X30613E L PDU 0000
(X30662E)
(X30646E)
1 = 0000
1 S/S
OF4
DATA BUS BUSY
XMIT SHIFT CLK
STARR CLK
FC 1
FC 2
FC 3
FC 4
MAN FPCA1
MAN FPCA3
MIA FPCA1
MIA FPCA3
MIA FPCA2
MIA FPCA4
MAN FPCA2
MAN FPCA4
(S6)
(S2)
(F3)
(F6)
(F2)
(F4)
(PWL F6)
(PWL F8)
BRIGHT-UP AMPL
X OUT SLOW
Y OUT SLOW
BIAS CHK STROBE
X IN SLOW
Y IN SLOW
±X DEFL
±Y DEFL
X DEFL
Y DEFL
AMP
LATCH
X OFFSET
Y OFFSET
MUX
DAC
SIN M DAC
COS M DAC
ZERO
CIRCLE EN
SIN
COS
±X
±Y
S
R
Q
P
O
N
M
L
K
J

DATE: 10/28/91 | NAME: LAM | VERSION: INK.6

PLT HUD (2)

CDR HUD (1)

MIA INTERFACE

TO GPC'S

FC 1 | FC 3 | FC 2 | FC 4

MIA A | MIA B | MIA OUTPUT MUX

NRZ DATA | VALIDITY BITS | XMIT SHIFT CLK

24 BIT SHIFT REG | CLOCK | 101

COMPARE TERMINAL ADDRESS | COMPARE 101 PATTERN | WORD COUNT REGISTER

COMP | COMP | ZERO

INPUT CONTROL | STATUS

FIFO 128 X 4 | FIFO 128 X 16 | MIA FIFO BUS

DATA STAT | READ FIFO | FIFO STAT | 15 DATA STAT | OUTPUT CONTROL | READ FIFO

16 MHZ OSC | CLOCK LOGIC | 8 MHZ SYS CLK | 5.33 MHZ STRKR CLK

DATA BUS SELECT

PNL F6 (PNL F8) S2 (S2)

MIA SELECT LOGIC | DATA BUS BUSY

INPUT BUFFERS AND ENABLES

RESET | TIMING AND CONTROL | RUN | MIA BIT LOGIC | MIA BIT

ROM

TRANSMIT LOGIC

24 BIT SHIFT REGISTER | 101 | HUDE/PDU FAIL

+5V | MIA ADDRESS LOGIC

SYMBOL GENERATOR MEMORY

FLIGHT CONTROL MEMORY

ADDRESS MUX /12 | 4 LEVEL RETURN REG /12

FC BR EN | PROGRAM COUNTER /12 | PC HOLD REG /12

PROGRAM MEMORY 24 X 8K | PROM PAGE CONTROL /12 | FC INSTR

PARITY CHECK 24 | FC PARITY

SG PARITY | SG BIT SET | FILT BIT SET | READ FIFO | SG INST BUS

FC BIT SET

INDEX REG /12 | INDEX MUX A B /13 | PROG ADDR ADDER /8 | INSTR REG /16 /8

FC INSTR BUS

/4 LIBRARY ADDR (FC ONLY)

RAM PAGE REG /2 | RAM PAGE ADDER /2 | RAM PAGE LATCH

FC RAM PAGE LOGIC

FIFO

SG INST

FC DATA

$V_{MNC\ FPCA3}$

$V_{MNA\ FPCA1}$

$V_{CNTL\ BC1}$ | $V_{CNTL\ AB2}$ | 1.2K | 1.2K

HUD POWER

ON | OFF

PNL F3 (PNL F3) S1 (S6)

RPC 10A

LOW VOLTAGE POWER SUPPLY

OVER VOLTAGE PROTECT | PWR ON RESET | INPUT FILTER | AUX PWR SUPPLY | +28V | VCC | PULSE WIDTH MOD

+5 VDC | +5V RTN | +10 VDC | +10V RTN | +12 VR | +12 VDC | -12 VR | -12 VDC | +15 VR | +15 VDC | -15 VR | -15 VDC | +16 VDC | -16 VDC | +40 VDC | -40 VDC | +85 VDC | -85 VDC | PNL 5 VDC | +26.5V RTN | LVPS BIT | BUILT-IN TEST

SYMBOL GENERATOR CPU

FLIGHT CONTROL CPU

1K X16 RAM | A, B1, B REGISTER | BN BUS MUX | AN BUS MUX | ARITHMETIC CONTROL | ALU | DATA BUS MULTIPLEXER

SG PAGE LOGIC | PAGE LOGIC | SG ADDR LOGIC | FC ADDR LOGIC | FC RAM DUMP | SG RAM DUMP | SG INSTR BUS | FC INSTR BUS

BASIC REV E-1

FOR DETAILED COMPONENT AND LOGIC INFORMATION REFER TO:

SSSH DWG NO.	SSSH DWG TITLE	VENDOR NAME	VENDOR DWG NO.	VENDOR SHEET NO.	REV	DATE	VENDOR DRAWING TITLE
9.1	G&C DEDICATED DISPLAYS	R.I.	VS70-730109	ALL	D	8/19/85	SCHEMATIC - DISPLAYS & CONTROLS
		R.I.	VS70-730172	ALL	C	8/25/85	SCHEMATIC - DISPLAYS & CONTROLS
		R.I.	VS70-733539	ALL	B	8/22/83	SCHEMATIC - PANEL F6A8 FORWARD MAIN CONSOLE
		R.I.	VS70-730249	ALL	A	9/13/82	SCHEMATIC - D&C ANNUNCIATORS
9.2	TACAN	R.I.	VS70-740179	ALL	D	12/9/88	SCHEMATIC DIAGRAM - COMMUNICATION & TRACKING TACAN SUBSYSTEM
		R.I.	MC409-0014	ALL	A	5/20/74	RECEIVER - TRANSMITTER, AIR NAVIGATION SET, TACTICAL
		HOFFMAN ELECTRONICS	12R5-2ARN-84(V)-2	ALL	---	8/1/73	TECHNICAL MANUAL, INTERMEDIATE MAINTENANCE, NAVIGATION SET, TACAN
9.3	RADAR ALTIMETER	R.I.	VS70-740159	---	D	7/19/88	SCHEMATIC DIAGRAM - COMM AND TRACKING, RADAR ALTIMETER
		HONEYWELL	W0075-T601-001	---	A	8/22/75	OPERATION AND SERVICE INSTRUCTIONS AND CALIBRATION PROCEDURES FOR THE ORBITER RA
9.4	MICROWAVE SCANNING BEAM LANDING SYSTEM	R.I.	VS70-740569	ALL	C	6/1/88	SCHEMATIC DIAGRAM - COMM & TRACKING, MICROWAVE SCAN BEAM LANDING SYS
9.5	COAS	R.I.	V620-660720	2	A	2/2/77	BRACKETT ASSEMBLY - CREWMAN OPTICAL ALIGNMENT SIGHT, FORWARD
		R.I.	V620-660731	2	A	7/1/77	BRACKETT - AFT OPERATIONAL, CREWMAN OPTICAL ALIGNMENT SIGHT, ASSY OF
		R.I.	V620-660810	2	C	1/30/77	SIGHT - CREWMAN OPTICAL ALIGNMENT, ASSY OF

DWG	SIGNATURE	DATE	DWG	SIGNATURE	DATE
9.1	ENGR H. M. MITCHELL		9.4	ENGR J. M. WEBB	
	ENGR Heather Mitchell	9-11-90		ENGR James M. Webb	9/11/90
9.2	ENGR J. M. WEBB		9.5	ENGR M. T. SEVERANCE	
	ENGR James M. Webb	9/11/90		ENGR Mark T. Severance	11 SEPT 90
9.3	ENGR M. T. SEVERANCE			APP Stephen J. Ebner	9/11/90
	ENGR Mark T. Severance	11 SEPT 90		APP John A. Kamman	9/11/90
	ENGR				
	ENGR			LTR E PCN	

NATIONAL AERONAUTICS AND SPACE ADMINISTRATION
LYNDON B. JOHNSON SPACE CENTER HOUSTON, TEXAS

VENDOR DRAWING REFERENCES

SPACE SHUTTLE	TBL NO 9-I
ALL	PAGE 9.I-1 SHEET 1 OF 5

BASIC REV E

FOR DETAILED COMPONENT AND LOGIC INFORMATION REFER TO:

SSSH DWG NO.	SSSH DWG TITLE	VENDOR NAME	VENDOR DWG NO.	VENDOR SHEET NO.	REV	DATE	VENDOR DRAWING TITLE
9.6 (SHEET 1)	STAR TRACKER	R.I.	VS70-590202	2	E	3/29/83	SCHEMATIC DIAGRAM - STAR TRACKER DOOR ACTUATOR SUBSYSTEM
9.6 (SHEET 2)	STAR TRACKER	R.I.	MC431-0128	---	B	11/12/87	STAR TRACKER SUBSYSTEM SPEC
		BALL BROTHERS	---	---	---	9/18/75	SCHEMATIC DIAGRAM IDT AND PREAMPLIFIER CIRCUITS
		BALL BROTHERS	---	---	---	9/11/75	PARALLEL ADDER
		BALL BROTHERS	---	---	---	9/8/75	LOW VOLTAGE POWER SUPPLY
		BALL BROTHERS	---	---	---	---	PROM COMPENSATION CIRCUIT
		BALL BROTHERS	---	---	---	9/11/75	A/D CONVERTER, PROM SWITCHING NETWORK
		BALL BROTHERS	---	---	---	9/18/75	SCHEMATIC DIAGRAM - COMPENSATION
		BALL BROTHERS	---	---	---	9/18/75	GENERAL TRACKER LOGIC
		BALL BROTHERS	---	---	---	9/18/75	SCHEMATIC DIAGRAM - POWER SUPPLY RANGE CONTROL CIRCUIT
		BALL BROTHERS	---	---	---	9/11/75	VIDEO CIRCUITS
		BALL BROTHERS	---	---	---	9/18/75	SPACE SHUTTLE TRACKER BRIGHT OBJECT SENSOR
		BALL BROTHERS	---	1-2	---	9/18/75	SCHEMATIC DIAGRAM - DEFLECTIONS CIRCUITS
		BALL BROTHERS	---	---	---	9/11/75	SAMPLE LOGIC
		BALL BROTHERS	---	---	---	9/18/75	SERIAL OUTPUT REGISTERS AND BITE COMPARATORS
		BALL BROTHERS	---	---	---	9/23/75	IAU INTERFACE ADAPTER UNIT
		BALL BROTHERS	---	---	---	9/11/75	MISC. CIRCUITS
		BALL BROTHERS	---	---	---	9/11/75	SCHEMATIC DIAGRAM - HIGH VOLTAGE POWER SUPPLY
		BALL BROTHERS	---	---	---	9/11/75	SCHEMATIC DIAGRAM - COMPENSATION CONTROL CIRCUIT
9.6 (SHEET 3)	STAR TRACKER	BALL	515876	1	A	1/22/90	SCHEMATIC DIAGRAM FOCAL PLANE
		BALL	515879	1	---	9/10/90	SCHEMATIC DIAGRAM SHUTTLE TRACKER POWER SUPPLY
		BALL	515885	1,2,3	B	11/12/89	SCHEMATIC DIAGRAM CIO
		BALL	515888	1,2	C	5/16/90	SCHEMATIC DIAGRAM TRACKER UTILITIES INTERFACE
		BALL	515891	1,2	C	10/9/90	SCHEMATIC DIAGRAM SHUTTLE TRACKER PROCESSOR
		BALL	515895	1	A	12/3/90	SCHEMATIC DIAGRAM SSST INTERCONNECT

DWG	SIGNATURE	DATE	DWG	SIGNATURE	DATE
9.6	ENGR C. K. ALFORD			ENGR	
	ENGR Charles Alford	10/7/93		ENGR	
	ENGR			ENGR	
	ENGR			ENGR	
	ENGR			APP John P. Stamm	10/7/93
	ENGR			APP John A. Kamman	10/7/93
	ENGR			OMNIPLAN	
	ENGR			LTR E	PCN 3

NATIONAL AERONAUTICS AND SPACE ADMINISTRATION
LYNDON B. JOHNSON SPACE CENTER HOUSTON, TEXAS

VENDOR DRAWING REFERENCES

SPACE SHUTTLE | TBL NO 9-I

ALL

BASIC REV E-3

FOR DETAILED COMPONENT AND LOGIC INFORMATION REFER TO:

SSSH DWG NO.	SSSH DWG TITLE	VENDOR NAME	VENDOR DWG NO.	VENDOR SHEET NO.	REV	DATE	VENDOR DRAWING TITLE
9.7	INERTIAL MEASUREMENT UNIT - HAINS	KEARFOTT	Y256C392			2/91	ORBITER HIGH ACCURACY INERTIAL NAVIGATION SYSTEM TECHNICAL DESCRIPTION
				42 (45, 48)	D	10/29/85	IMU 1 (2,3) STABILIZATION LOOPS AND SINES/COSINES OF ATTITUDE ANGLES
				43 (46,49)	D	10/29/85	IMU 1 (2,3) ACCELEROMETERS AND DATA INPUT/OUTPUT
		R.I.	VS70-710102	1-3	D	3/11/83	SCHEMATIC DIAGRAM - INERTIAL MEASUREMENT UNIT (IMU) G/N SUBSYSTEM
		R.I.	VS70-710109	1-3	-	10/21/80	SCHEMATIC DIAGRAM - INERTIAL MEASUREMENT UNIT (IMU) G/N SUBSYSTEM
		SINGER KEARFOTT	Y254A176	-	-	6/15/76	ORBITER INERTIAL MEASUREMENT UNIT (IMU) TECHNICAL DESCRIPTION
9.8	RATE GYROS/BODY-MOUNTED ACCELERO-METERS	R.I.	VS70-710152	-	E	1/14/81	SCHEMATIC DIAGRAM - ORBITER RATE GYRO GDNC & NAV SYSTEM
		R.I.	VS70-710179	-	D	4/23/88	SCHEMATIC DIAGRAM - SOLID RKT BSTER RATE GYRO GDNC & NAV SUBSYSTEM
		R.I.	VS70-790112	-	C	1/24/80	SCHEMATIC DIAGRAM - ACCELEROMETER ASSY FLT CONTROL SUBSYSTEM
		R.I.	VS70-971102	13-20	D	10/29/85	INTEGRATED SYSTEMS SCHEMATICS OV-102 GNC & DPS
		HONEYWELL	34024066	-	A	9/11/74	AA POWER SUPPLY
		NORTHRUP	101069	-	D	11/17/75	SCHEMATIC POWER SUPPLY ASSEMBLY MODULE
9.9	AIR DATA SYSTEM	R.I.	VS70-590302	1-6	D	1/28/80	AIR DATA PROBE DEPLOYMENT AND HEATER
		R.I.	VS70-590309	1-5	-	10/21/80	AIR DATA PROBE DEPLOYMENT AND HEATER
		R.I.	VS70-971102	50 (51-53)	-	10/29/85	AIR DATA SYSTEM PATH W (2-4)
				101 - 102 (103-104)			AIR DATA PROBE RIGHT (LEFT) DEVELOPMENT AND HEATER
9.10	FCS MODE SWITCHES	R.I.	VS70-733539	-	B	9/22/83	SCHEMATIC DIAGRAM PANEL F6A8 FWD MAIN CONSOLE FOR ABORT SWITCHES
		R.I.	VS70-730249	-	A	3/8/83	SCHEMATIC DIAGRAM D & C ANNUNCIATOR SUBSYSTEM
		R.I.	VS70-790209	-	C	12/4/84	SCHEMATIC DIAGRAM DISPLAY & CONTROL SWITCHES FLIGHT CONTROL SUBSYSTEM
		R.I.	V070-730284	-	B	9/24/79	PANEL ASSEMBLY - C3A6, CENTER CONSOLE, DISPLAYS AND CONTROLS
		R.I.	V070-730325	-	B	1979	PANEL ASSEMBLY - A6C3, AFT CONSOLE, DISPLAYS AND CONTORLS
9.11	AERO SURFACE SIGNAL FLOW	R.I.	VS70-790222	-	C	4/4/79	SCHEMATIC DIAGRAM - ASA FLIGHT CONTROLS SUBSYSTEM
		R.I.	VS70-790229	-	D	11/11/83	SCHEMATIC DIAGRAM - ASA FLIGHT CONTROLS SUBSYSTEM
		R.I.	VS70-7790202	-	E	1/11/85	SCHEMATIC DIAGRAM - D & C FLIGHT CONTROLS SUBSYSTEM
		R.I.	VS70-790209	-	C	12/4/84	SCHEMATIC DIAGRAM - D & C FLIGHT CONTROLS SUBSYSTEM

DWG	SIGNATURE	DATE	DWG	SIGNATURE	DATE
9.7	ENGR G. ALFORD		9.11	ENGR L. STALLARD	
	ENGR Charles Alford	9/22/94		ENGR Laura A Stallard	9/22/94
9.8	ENGR D. MARQUETTE			ENGR	
	ENGR DAE MARQUETTE	9/27/94		ENGR	
9.9	ENGR K. DUNN			APP Stanley Schoenbauer	9/26/94
	ENGR [signature]	9/22/94		APP	
9-10	ENGR B. SCHOENBAUER			APP	
	ENGR [signature]	9/27/94		LTR E	PCN 4

NATIONAL AERONAUTICS AND SPACE ADMINISTRATION
LYNDON B. JOHNSON SPACE CENTER HOUSTON, TEXAS

VENDOR DRAWING REFERENCES

SPACE SHUTTLE: ALL | TBL NO 9-I

PAGE 9.I-3 | SHEET 3 OF 5

BASIC REV E-4

FOR DETAILED COMPONENT AND LOGIC INFORMATION REFER TO:

SSSH DWG NO.	SSSH DWG TITLE	VENDOR NAME	VENDOR DWG NO.	VENDOR SHEET NO.	REV	DATE	VENDOR DRAWING TITLE
9.13	OMS/TVC SIGNAL FLOW AND DRIVERS	R.I.	VS70-430309	8	E	8/23/88	OMS SUBSYSTEM CONTROL - LEFT POD (OV - 103 & SUBS)
		R.I.	VS70-420302	8	E	8/23/88	OMS SUBSYSTEM CONTROL - LEFT POD (OV - 102)
		R.I.	VS70-430209	8	B	8/25/82	OMS SUBSYSTEM CONTROL - RIGHT POD (OV - 103 & SUBS)
		R.I.	VS70-430202	8	E	8/1/84	OMS SUBSYSTEM CONTROL - RIGHT POD (OV - 102)
		NASA/ JOHNSON SPACE CENTER	JSC-08934 VOL. I-A	-	F	10/87	SHUTTLE OPERATIONAL DATA BOOK, VOLUME I-A, SHUTTLE SYSTEMS ELECTRICAL EQUIPMENT LIST
9.14	ME AND SRB TVC ACTUATORS	MOOG	A05268	1-2 OF 2	-	7/2/75	HYDRAULIC SCHEMATIC SRB SERVOACTUATOR MODEL 17-310
		MOOG	A05271	1 OF 1	-	7/13/75	ASSEMBLY SRB SERVOACTUATOR MODEL 17-310
		UNITED TECH-NOLOGIES	10400-0833	10 OF 73	-	1/21/87	O. F. ELECTRICAL SCHEMATIC SOLID ROCKET BOOSTER POWER DISTRIBUTION SIGNAL CONDITIONERS
				15 OF 73	-	1/26/87	O. F. ELECTRICAL SCHEMATIC SOLID ROCKET BOOSTER THRUST VECTOR CONTROL - ROCK ACTUATOR
				17 OF 73	-	1/21/87	O. F. ELECTRICAL SCHEMATIC SOLID ROCKET BOOSTER THRUST VECTOR CONTROL-TILT ACTUATOR
		NASA/ MARSHALL SPACE FLIGHT CENTER	16A10241	16 OF 70	8	7/18/76	SRB O. F. ELECTRICAL SCHEMATIC THRUST VECTOR CONTROL ROCK ACTUATOR
				18 OF 70	B	7/17/76	SRB O. F. ELECTRICAL SCHEMATIC THRUST VECTOR CONTROL TILT ACTUATOR
		R.I.	MC621-0015	1-72 OF 72	B	7/27/76	SPECIFICATION SEROACTUATOR, MAIN ENGINE, GIMBAL, ELECTR-COMMAND HYDRAULIC (TYC)
9.15	ME & SRB TVC SIGNAL FLOW	R.I.	VS70-790209	3	C	12/4/84	DISPLAY & CONTROL SWITCHES FLIGHT CONTROL SUBSYSTEM(OV - 103 & SUBS)
		R.I.	VS70-790239	ALL	E	5/8/84	ATVC - FLT CONTROL SUBSYSTEM (OV - 103 & SUBS)
		R.I.	VS70-790232	ALL	E	10/82	ATVC - FLT CONTROL SUBSYSTEM (OV - 102)
		R.I.	VS70-790202	9	E	12/84	DISPLAY & CONTROL SWITCHES FLIGHT CONTROL SUBSYSTEM (OV - 102)
9.16 (SHEETS 1 AND 2)	AERO SURFACE ACUATORS	MOOG	A20537	-	-	5/17/78	ELEVON
		R.I.	MC621-0014	-	-	12/22/80	ELEVON SPEC.
		SUNDSTRAND AVIATION	EP6024-6	-	-	8/12/74	RUDDER/SPEEDBRAKE
		MOOG	A241288	-	-	2/21/78	RUDDER/SPEEDBRAKE
		R.I.	MC621-0053	-	-	10/20/82	RUDDER SPEEDBRAKE SPEC
		SUNDSTRAND AVIATION	EP6038-2001	-	-	11/4/74	BODY FLAP
		R.I.	MC621-0056	-	-	5/15/82	BODY FLAP SPEC
		R.I.	SD72-SH-0105 VOL.1, BOOK 2, APPENDIX A	-	-	12/15/76	REQUIREMENTS/DEFINITION DOCUMENT, FLIGHT CONTROL APPENDIX A - ACTIVATION SUBSYSTEM

DWG	SIGNATURE	DATE	DWG	SIGNATURE	DATE
9.13	ENGR L. STALLARD			ENGR	
	ENGR Howard Stallard	9/22/94		ENGR	
9.14	ENGR D. J. GRUBER			ENGR	
	ENGR David J. Gruber	9/22/94		ENGR	
9.15	ENGR D. J. GRUBER			APP Stanley J. Schaefer	9/26/94
	ENGR David J. Gruber	9/22/94		APP	
9.16	ENGR L. STALLARD			APP	
	ENGR Howard Stallard	9/22/94		LTR E	PCN 4

NATIONAL AERONAUTICS AND SPACE ADMINISTRATION
LYNDON B. JOHNSON SPACE CENTER HOUSTON, TEXAS

VENDOR DRAWING REFERENCES

SPACE SHUTTLE | TBL NO 9-I
ALL

BASIC REV E-4

FOR DETAILED COMPONENT AND LOGIC INFORMATION REFER TO:

SSSH DWG NO.	SSSH DWG TITLE	VENDOR NAME	VENDOR DWG NO.	VENDOR SHEET NO.	REV	DATE	VENDOR DRAWING TITLE
9.17	RHC/SBTC/RPTA/THC	R.I.	VS70-790129	---	B	05/27/84	ROTATION HAND CONTROL. FLT CONTROL SUBSYSTEM
		R.I.	VS70-790139	---	---	11/17/80	SPEED BRAKE THRUST CONTROL FLT CONTROL SUBSYSTEM
		R.I.	VS70-790149	---	---	11/05/80	RUDDER PEDAL XDCR ASSY FLT CONTROL SUBSYSTEM
		R.I.	VS70-790159	---	---	01/14/81	TRANSLATION HAND CONTROL FLT CONTROL SUBSYSTEM
		R.I.	VS70-790209	---	C	08/17/84	DISPLAY AND CONTROL SWITCHES FLIGHT CONTROL SUBSYSTEM
9.20	HEAD UP DISPLAY	R.I.	VS70-730269	ALL	E	8/09/84	HEADS UP DISPLAY SUBSYSTEM
		KAISER	03944-65002	ALL	---	9/20/80	PDV BLOCK DIAGRAM
		KAISER	03944-65005	ALL	---	---	HUD EXTERNAL INTERCONNECT
		KAISER	03944-65091	ALL	---	4/15/81	PDU INTERCONNECT
		KAISER	03944-65501	ALL	---	1981	HUDE SYSTEM BLOCK DIAGRAM
		KAISER	03944-65701	ALL	---	1/21/81	LOW VOLTAGE POWER SUPPLY

DWG	SIGNATURE	DATE	DWG	SIGNATURE	DATE
9.17	ENGR S. M. SPRUELL			ENGR	
	ENGR S. M. Spruell	9-11-90		ENGR	
9.20	ENGR M. T. SEVERANCE			ENGR	
	ENGR Mark T. Severance	11 SEP 90		ENGR	
	ENGR			APP Stephen J. Elsner	9/11/90
	ENGR			APP John A. Kamman	9/11/90
	ENGR			OMNIPLAN	
	ENGR			LTR E	PCN

NATIONAL AERONAUTICS AND SPACE ADMINISTRATION
LYNDON B. JOHNSON SPACE CENTER HOUSTON, TEXAS

VENDOR DRAWING REFERENCES

SPACE SHUTTLE | TBL NO 9-I
ALL

BASIC REV E

JSC–11174

Space Shuttle Systems Handbook

Volume I

Sections 1 through 9

Rev E, DCN–6
August 14, 1996

SD
MOD
JSC
NASA